HIWIN CONFIDENTIAL
機密文件未經許可，嚴禁複製

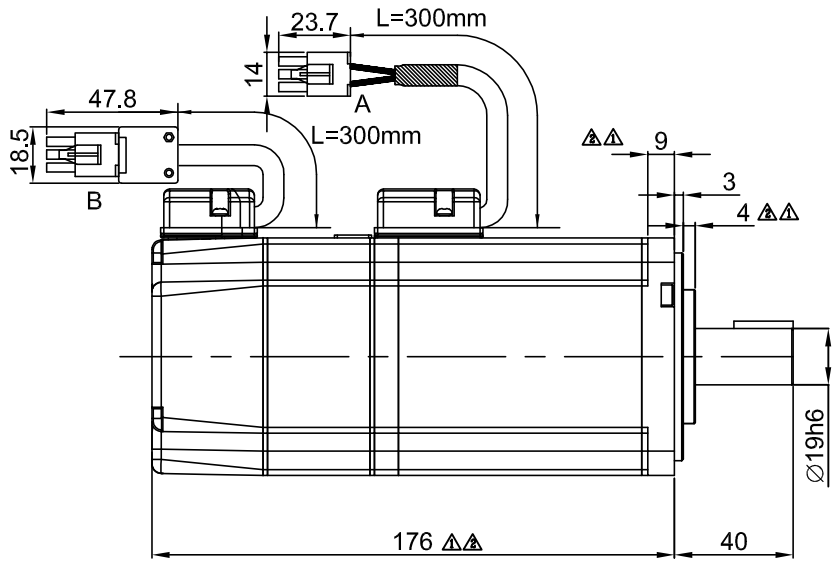

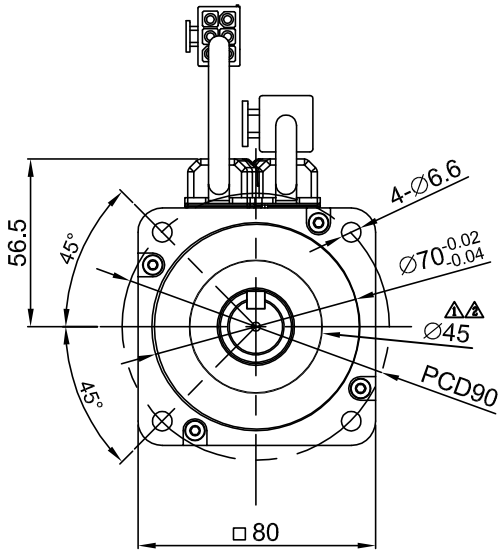

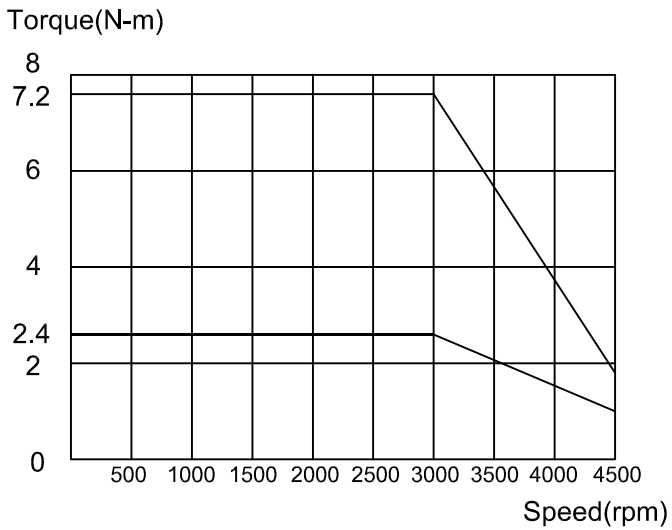

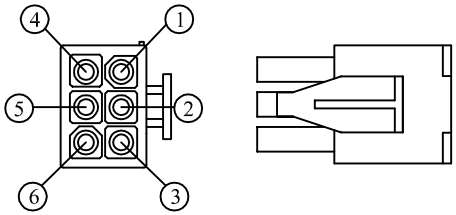

Connector A

Power Pin Assignment	
Signal	AMP-172168-1
U	3
V	2
W	1
⏚	4
B+	5
B-	6

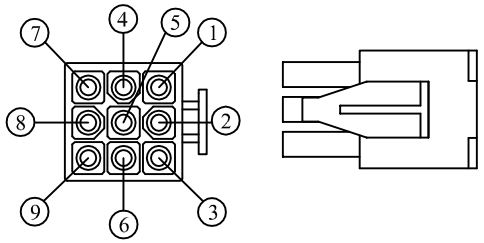

Connector B

Encoder Pin Assignment			
Function	Signal		AMP-172169-1
Power	5V		1
	0V		2
Incremental Signal/ Hall Signal	A/U	+	3
	A/U	-	4
	B/V	+	5
	B/V	-	6
	Z/W	+	7
	Z/W	-	8
Shielding	Shielding		9

Rate Power：750W
Driver Input Voltage：220V
Rated Torque：2.4N-m
Rated Speed：3000 rpm
Rated Current：5.1A(Arms)
Moment of Inertia : 1.46 Kg-m² (*10^{-4})
Allowable Load Inertia Ratio : 10 times or less
Encoder：13-bit Incremental
Brake：Yes
Shaft：Key,Center tap
Oil seal：Yes

ITEM	DATE	MODIFIED	DESCRIPTION	CHK	APPD
3	2018.08.20	周孟儒	U1000-ECN-180807 更換為含油封前蓋	林政穎	鄭立巍
2	2018.05.02	周孟儒	U1000-ECN-180501	林政穎	鄭立巍
1	2014.05.22	邱婉容	5->4		U120B-ECN -140512

NAME	DWG NO		SHEET	TYPE	MS750W	DATE	2014.03.31
AC SERVO MOTOR	AC22034	A4	1-1	CUSTOMER		DRN	邱婉容
HIWIN® MIKROSYSTEM CORP.				SCALE	1 : X	CHK	鄭立巍
				PART NO	FRMS752B508D	APPD	江新安