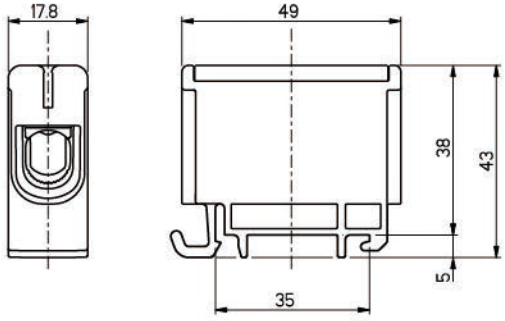

KE61 Universal Terminal for Al/Cu Conductors

Technical Specification

Conductor Cross-section(mm²) :

Cu 2.5-50 mm² Al 6-50 mm²

Conductor Size (AWG): 1/0-6

Housing: Polyamide

Mounting: DIN rail

Screw: Hexagon, 5mm

Operating Temperature (℃): Max 80℃

Standard: EN61238-1, EN60947-7-2

Model no.	Code	Color	Pole	Tighten torque(Nm)	Nominal Current(A)	Nominal Voltage(V)	Weight (g)
KE61.1	1914103	Grey	1 pole Al/Cu2.5-50 mm²	4Nm(2.5-4 mm²) 12Nm(6-50 mm²)	Cu 160A Al 145A	750V	35
KE61.2	1914104	Blue					
KE61.3	1914105	Yellow/Green					

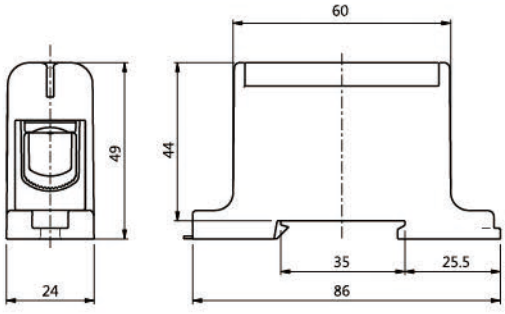

KE62 Universal Terminal for Al/Cu Conductors

Technical Specification

Conductor Cross-section(mm²) : 16-95 mm²

Conductor Size (AWG): 4/0-4

Housing: Polyamide

Mounting: DIN rail

Screw: Hexagon, 5mm

Operating Temperature (℃): Max 80℃

Standard: EN 61238-1, EN 60947-7-1

Model no.	Code	Color	Pole	Tighten torque(Nm)	Nominal Current(A)	Nominal Voltage(V)	Weight (g)
KE62.1	1914113	Grey	1 pole Al/Cu16-95 mm²	20Nm	Cu 245A Al 220A	750V	90
KE62.2	1914114	Blue					
KE62.3	1914115	Yellow/Green					

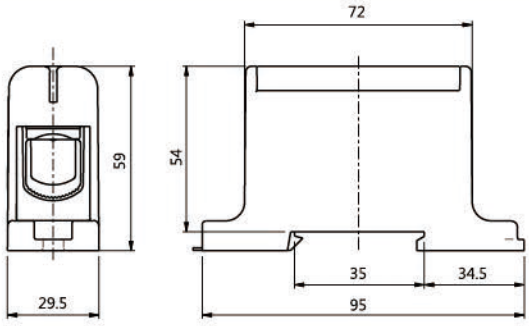

KE63 Universal Terminal for Al/Cu Conductors

Technical Specification

Conductor Cross-section(mm²) : 35-150 mm²

Conductor Size (AWG): 300-2

Housing: Polyamide

Mounting: DIN rail

Screw: Hexagon, 8mm

Operating Temperature (℃): Max 80℃

Standard: SFS 2663

Model no.	Code	Color	Pole	Tighten torque(Nm)	Nominal Current(A)	Nominal Voltage(V)	Weight (g)
KE63.1	1914118	Grey	1 pole Al/Cu 35-150 mm²	14Nm(35-95mm²) 24Nm(120-150mm²)	Cu 320A Al 290A	750V	160
KE63.2	1914119	Blue					
KE63.3	1914120	Yellow/Green					

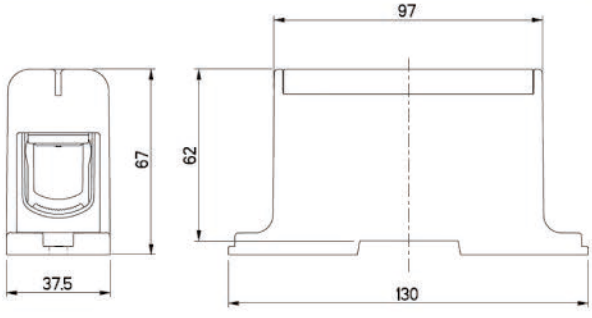

KE64 Universal Terminal for Al/Cu Conductors

Technical Specification

Conductor Cross-section(mm²) : 35-240 mm²

Conductor Size (AWG): 500-3/0

Housing: Polyamide

Mounting: Screw

Screw: Hexagon, 8mm

Operating Temperature (℃): Max 80℃

Standard: EN 61238-1, EN 60947-7-1

Model no.	Code	Color	Pole	Tighten torque(Nm)	Nominal Current(A)	Nominal Voltage(V)	Weight (g)
KE64.1	1914130	Grey	1 pole Al/Cu 35-240 mm²	12Nm(35-70mm²) 40Nm(95-240mm²)	Cu 425A Al 380A	750V	305
KE64.2	1914131	Blue					
KE64.3	1914132	Yellow/Green					

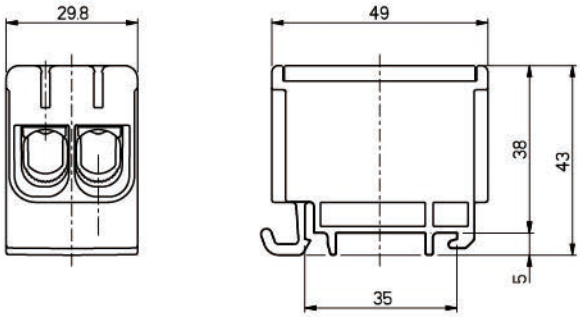

KE66 Universal Terminal for Al/Cu Conductors

Technical Specification

Conductor Cross-section(mm²) :

Cu 2.5-50 mm² Al 6-50 mm²

Conductor Size (AWG): 1/0-6

Housing:Polyamide

Mounting: DIN rail

Number of termination points : 4

Screw: Hexagon, 5mm

Operating Temperature (℃): Max 80℃

Standard: EN 61238-1, EN 60947-7-1

Model no.	Code	Color	Pole	Tighten torque(Nm)	Nominal Current(A)	Nominal Voltage(V)	Weight (g)
KE66.1	1914106	Grey	2 pole Al/Cu2.5-50 mm²	4Nm(2.5-4 mm²) 12Nm(6-50 mm²)	Cu 160A Al 145A	750V	60
KE66.2	1914107	Blue					
KE66.3	1914108	Yellow/Green					

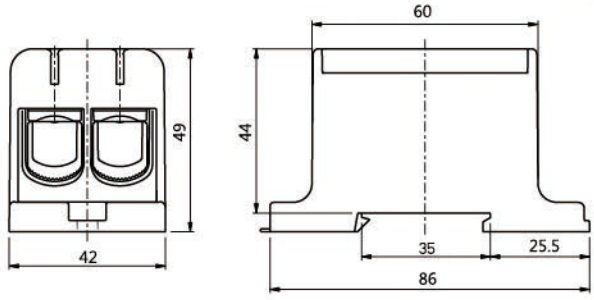

KE67 Universal Terminal for Al/Cu Conductors

Technical Specification

Conductor Cross-section(mm²) : 16-95 mm²

Conductor Size (AWG): 4/0-4

Housing: Polyamide

Mounting: DIN rail

Number of termination points : 4

Screw:Hexagon, 8mm

Operating Temperature (℃): Max 80℃

Standard: EN 61238-1, EN 60947-7-1

Model no.	Code	Color	Pole	Tighten torque(Nm)	Nominal Current(A)	Nominal Voltage(V)	Weight (g)
KE67.1	1914125	Grey	2 pole Al/Cu16-95 mm²	20 Nm	Cu 245A Al 220A	750V	165
KE67.2	1914126	Blue					
KE67.3	1914127	Yellow/Green					

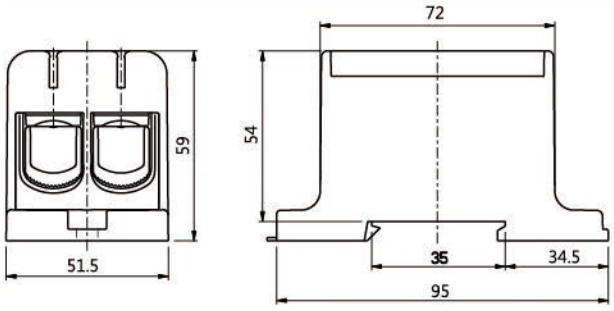

KE68 Universal Terminal for Al/Cu Conductors

Technical Specification

Conductor Cross-section(mm²) : 35-150 mm²

Conductor Size (AWG): 300-2

Housing: Polyamide

Mounting: DIN rail

Number of termination points : 4

Screw: Hexagon, 8mm

Operating Temperature (℃): Max 80℃

Standard: EN 61238-1, EN 60947-7-1

Model no.	Code	Color	Pole	Tighten torque(Nm)	Nominal Current(A)	Nominal Voltage(V)	Weight (g)
KE68.1	1914124	Grey	2 pole Al/Cu35-150 mm²	20 Nm (35-95mm²) 30 Nm (120-150mm²)	Cu 320A Al 290A	750V	290
KE68.2	1914125	Blue					
KE68.3	1914126	Yellow/Green					

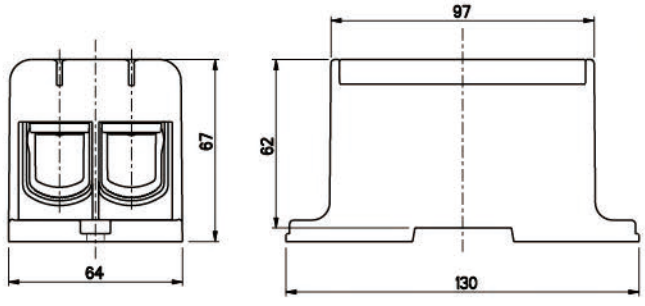

KE69 Universal Terminal for Al/Cu Conductors

Technical Specification

Conductor Cross-section(mm²) : 35-240 mm²

Conductor Size (AWG): 500-3/0

Housing: Polyamide

Mounting: Screw

Number of termination points : 4

Screw: Hexagon, 8mm

Operating Temperature (℃): Max 80℃

Standard: EN 61238-1, EN 60947-7-1

Model no.	Code	Color	Pole	Tighten torque(Nm)	Nominal Current(A)	Nominal Voltage(V)	Weight (g)
KE69.1	1914133	Grey	2 pole Al/Cu 35-240 mm²	12 Nm (35-70mm²) 45 Nm (95-240mm²)	Cu 425A Al 380A	750V	550
KE69.2	1914134	Blue					
KE69.3	1914135	Yellow/Green					

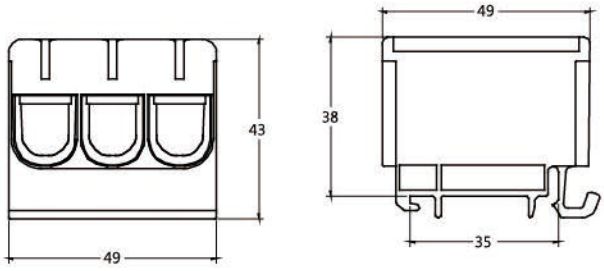

KE71 Universal Terminal for Al/Cu Conductors

Technical Specification

Conductor Cross-section(mm²) :

Cu 2.5-50 mm² Al 6-50 mm²

Conductor Size (AWG): 1/0-6

Housing:Polyamide

Mounting: DIN rail

Number of termination points : 4

Screw: Hexagon, 5mm

Operating Temperature (℃): Max 80℃

Standard: EN 61238-1, EN 60947-7-1

Model no.	Code	Color	Pole	Tighten torque(Nm)	Nominal Current(A)	Nominal Voltage(V)	Weight (g)
KE71.1		Grey	3 pole Al/Cu2.5-50 mm²	4Nm(2.5-4 mm²) 12Nm(6-50 mm²)	Cu 160A Al 145A	750V	60
KE71.2		Blue					
KE71.3		Yellow/Green					

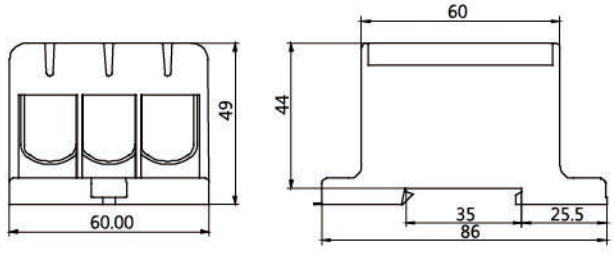

KE72 Universal Terminal for Al/Cu Conductors

Technical Specification

Conductor Cross-section(mm²) : 16-95 mm²

Conductor Size (AWG): 4/0-4

Housing: Polyamide

Mounting: DIN rail

Number of termination points : 4

Screw:Hexagon, 8mm

Operating Temperature (℃): Max 80℃

Standard: EN 61238-1, EN 60947-7-1

Model no.	Code	Color	Pole	Tighten torque(Nm)	Nominal Current(A)	Nominal Voltage(V)	Weight (g)
KE72.1		Grey	3 pole Al/Cu16-95 mm²	20 Nm	Cu 245A Al 220A	750V	165
KE72.2		Blue					
KE72.3		Yellow/Green					

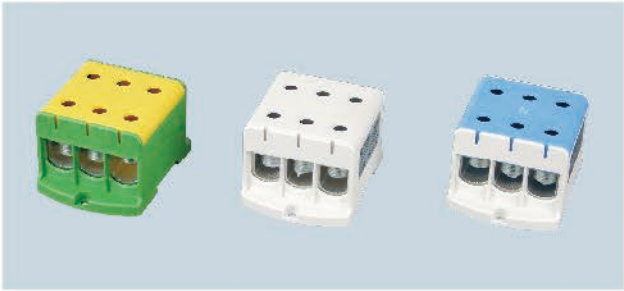

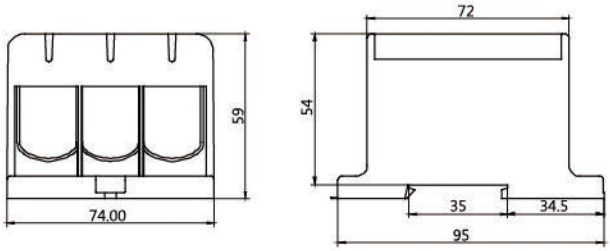

KE73 Universal Terminal for Al/Cu Conductors

Technical Specification

Conductor Cross-section(mm²) : 35-150 mm²

Conductor Size (AWG): 300-2

Housing: Polyamide

Mounting: DIN rail

Number of termination points : 4

Screw: Hexagon, 8mm

Operating Temperature (℃): Max 80℃

Standard: EN 61238-1, EN 60947-7-1

Model no.	Code	Color	Pole	Tighten torque(Nm)	Nominal Current(A)	Nominal Voltage(V)	Weight (g)
KE73.1		Grey	3 pole Al/Cu35-150 mm²	20 Nm (35-95mm²) 30 Nm (120-150mm²)	Cu 320A Al 290A	750V	290
KE73.2		Blue					
KE73.3		Yellow/Green					

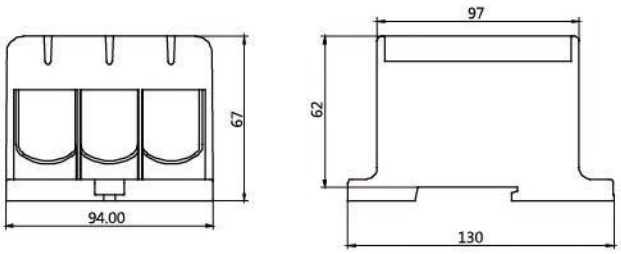

KE74 Universal Terminal for Al/Cu Conductors

Technical Specification

Conductor Cross-section(mm²) : 35-240 mm²

Conductor Size (AWG): 500-3/0

Housing: Polyamide

Mounting: Screw

Number of termination points : 4

Screw: Hexagon, 8mm

Operating Temperature (℃): Max 80℃

Standard: EN 61238-1, EN 60947-7-1

Model no.	Code	Color	Pole	Tighten torque(Nm)	Nominal Current(A)	Nominal Voltage(V)	Weight (g)
KE74.1		Grey	3 pole Al/Cu 35-240 mm²	12 Nm (35-70mm²) 45 Nm (95-240mm²)	Cu 425A Al 380A	750V	550
KE74.2		Blue					
KE74.3		Yellow/Green					

1000V terminals
For Al/Cu conductors from 2.5 mm² to 150 mm²

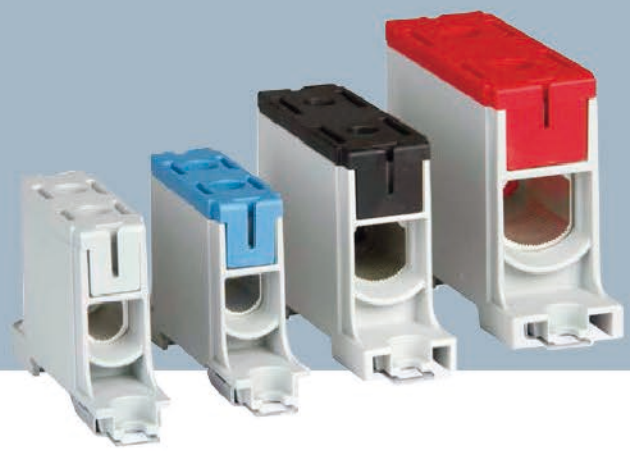

Features for 1000V terminals:

- Suitable for 1000 VAC and VDC
- Compact size
  - Can be installed next to each other without partition plates
- Suitable for both aluminium and copper conductors
- Short circuit tested class A terminals
- Higher temperature range (90℃)

Technical features

- Housing: fiberglass reinforced polyamide
  - Better mechanical strength vs. polyamide
  - Better insulating capacity
  - 90℃ temperature range achieved for the material
- Colours:
  - Red and black versions for DC applications
  - Grey and blue for AC applications (KE6x.3 to be used as a grounding terminal)

Standards	
For copper conductors:	EN 60947-7-1:2009
For aluminium conductors:	EN 61238-1:2003
Connector class	A
Technical information	
Cross-section range:	Al 6 - 150 mm²
	Cu 2.5 - 150 mm²
Nominal current range:	145 - 320 A
Operating temperature:	max. 90℃
Pollution degree	3
Material	
Housing:	Fiberglass reinforced polyamide
Body and screws:	Tin-coated aluminium
Mechanical features	
Screw heads:	Hexagonal
Mounting:	Screws or DIN rail

1000V, one-pole terminal blocks

Product code	Conductor cross-section (mm²)	Colour	Nominal current (A)	Nominal insulation voltage (V)	Screw head hexagon (mm)	Tightening torque (Nm)	Mounting	Weight (kg)	Package size (pcs)	
LK161	Cu 2,5-50 mm² Al 6-50 mm²	Grey	Cu 160 A, Al 145 A	1000 V	5 mm	4 Nm (2.5-4mm²), 12 Nm (6-50mm²)	DIN rail	0.045	30	
LK161.2	Cu 2,5-50 mm² Al 6-50 mm²	Blue	Cu 160 A, Al 145 A	1000 V	5 mm	4 Nm (2.5-4mm²), 12 Nm (6-50mm²)	DIN rail	0.045	30	
LK161.4	Cu 2,5-50 mm² Al 6-50 mm²	Red	Cu 160 A, Al 145 A	1000 V	5 mm	4 Nm (2.5-4mm²), 12 Nm (6-50mm²)	DIN rail	0.045	30	
LK161.6	Cu 2,5-50 mm² Al 6-50 mm²	Black	Cu 160 A, Al 145 A	1000 V	5 mm	4 Nm (2.5-4mm²), 12 Nm (6-50mm²)	DIN rail	0.045	30	
LK162	Al/Cu 16-95 mm²	Grey	Cu 245 A, Al 220 A	1000 V	5 mm	20 Nm	DIN rail/screw	0.091	30	
LK162.2	Al/Cu 16-95 mm²	Blue	Cu 245 A, Al 220 A	1000 V	5 mm	20 Nm	DIN rail/screw	0.091	30	
LK162.4	Al/Cu 16-95 mm²	Red	Cu 245 A, Al 220 A	1000 V	5 mm	20 Nm	DIN rail/screw	0.091	30	
LK162.6	Al/Cu 16-95 mm²	Black	Cu 245 A, Al 220 A	1000 V	5 mm	20 Nm	DIN rail/screw	0.091	30	
LK163	Al/Cu 35-150 mm²	Grey	Cu 320 A, Al 290 A	1000 V	8 mm	20 Nm (35-95mm²), 30 Nm (120-150mm²)	DIN rail/screw	0.143	30	
LK163.2	Al/Cu 35-150 mm²	Blue	Cu 320 A, Al 290 A	1000 V	8 mm	20 Nm (35-95mm²), 30 Nm (120-150mm²)	DIN rail/screw	0.143	30	
LK163.4	Al/Cu 35-150 mm²	Red	Cu 320 A, Al 290 A	1000 V	8 mm	20 Nm (35-95mm²), 30 Nm (120-150mm²)	DIN rail/screw	0.143	30	
LK163.6	Al/Cu 35-150 mm²	Black	Cu 320 A, Al 290 A	1000 V	8 mm	20 Nm (35-95mm²), 30 Nm (120-150mm²)	DIN rail/screw	0.143	30	

The nominal currents in the table are for maximum cross-sections.

UL recognitions

Product code	Wire type	AWG* 1 wire/terminal	AWG* 2 Cu-wires/ terminal	AWG* 3 Cu-wires/ terminal	Max insulation voltage	Max current	Tightening torque	Allen-hex socket head terminal screw	Dimensions (W x H x D)
LK161	Cu Al	1/0 - 6 1/0 - 6	6	8	1000 V 1000 V	150 A 120 A	90 lb·in (10 Nm)	5 mm	3.25 x 1.89 x 0.76 In (82.5 x 48 x 19.2 mm)
LK162	Cu Al	4/0 - 4 4/0 - 4	2 - 6	6	1000 V 1000 V	230 A 180 A	126 lb·in (14 Nm)	5 mm	3.74 x 2.16 x 0.98 In (95 x 55 x 25 mm)
LK163	Cu Al	300 - 2 300 - 2	1/0 - 2	2	1000 V 1000 V	285 A 230 A	216 lb·in (24 Nm)	8 mm	4.15 x 2.58 x 1.20 In (105.5 x 65.5 x 30.4 mm)

Standard UL 1059
* AWG = American Wire Gauge
All terminal blocks are delivered with oxide-inhibiting compound applied.

LK161

LK161.2

LK162.6

LK163.4

Dimensional drawings

LK 161

Dimensions in mm

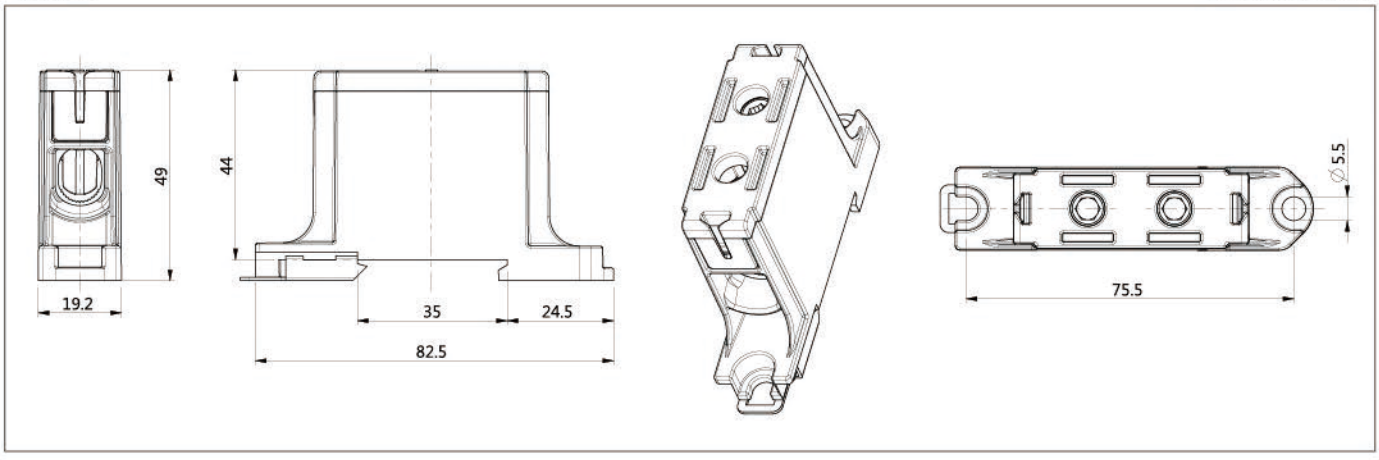

LK 162

Dimensions in mm

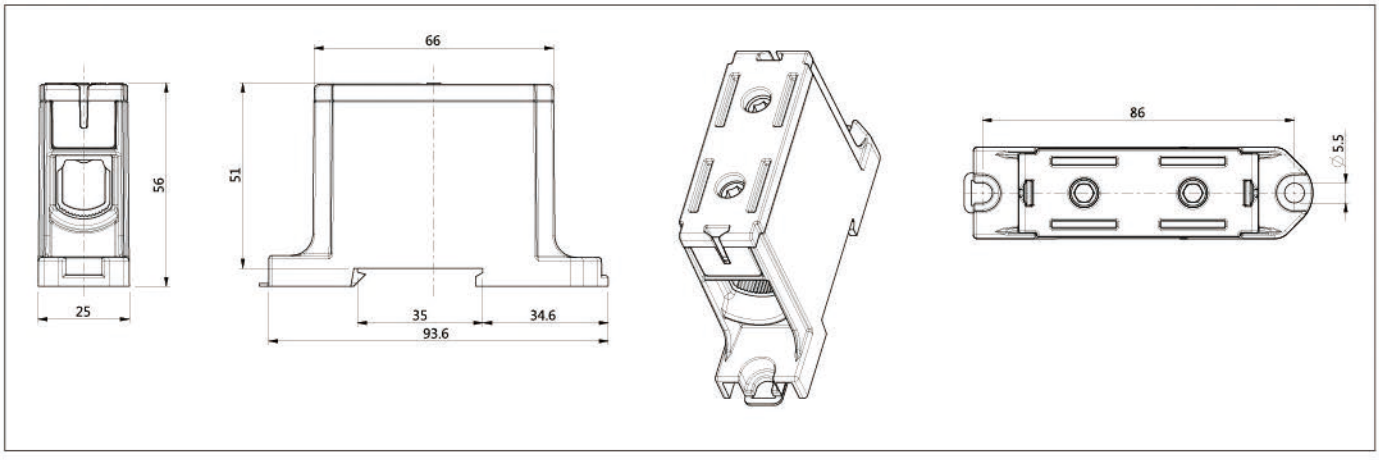

LK 163

Dimensions in mm

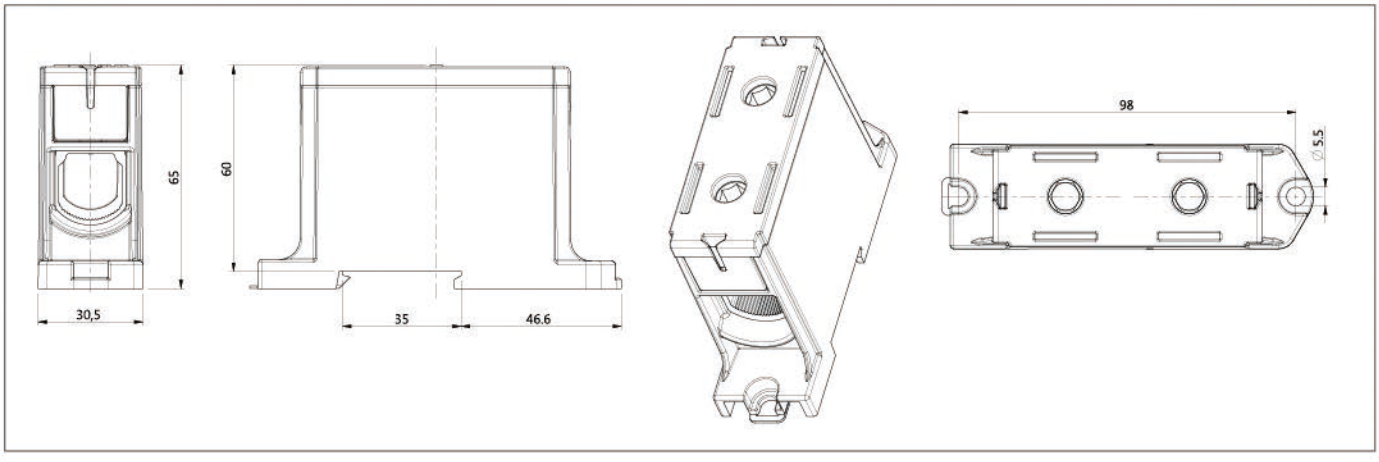

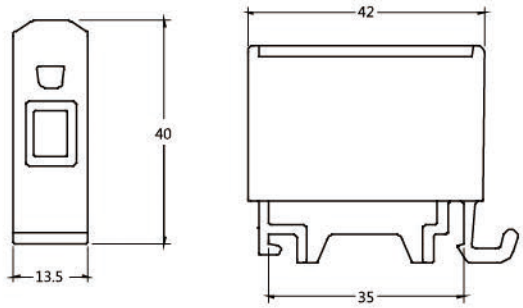

KE60 Universal Terminal for Al/Cu Conductors

Technical Specification

Conductor Cross-section(mm²) : 1.5-16 mm²

Housing: Polyamide

Mounting: DIN rail

Screw: Hexagon, 4mm

Operating Temperature (℃): Max 80℃

Standard: EN61238-1, EN60947-7-2

Model no.	Code	Color	Pole	Tighten torque(Nm)	Nominal Current(A)	Nominal Voltage(V)	Weight (g)
KE60.1	1914100	Grey	1 pole Al/Cu 1.5-16 mm²	1.5Nm(1.5 mm²) 3.5Nm(2.5-6 mm²) 7Nm(10-16 mm²)	85A	690V	15
KE60.2	1914101	Blue					
KE60.3	1914102	Yellow/Green					

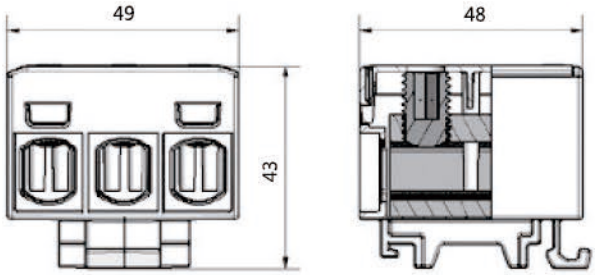

KE61.4 3pole Universal Terminal for Al/Cu Conductors

Technical Specification

Pole: 3 pole

Conductor Cross-section(mm²) :

Cu 2.5-50 mm² Al 6-50 mm²

Conductor Size (AWG): 1/0-6

Housing: Polyamide

Mounting: DIN rail

Screw: Hexagon, 5mm

Operating Temperature (℃): Max 80℃

Standard: EN61238-1, EN60947-7-2

Model no.	Code	Color	Pole	Tighten torque(Nm)	Nominal Current(A)	Nominal Voltage(V)	Weight (g)
KE61.4	1914109	Grey	3 pole Al/Cu2.5-50 mm²	4Nm(2.5-4 mm²) 12Nm(6-50 mm²)	Cu 160A Al 145A	750V	35
KE61.5	1914110	Blue					
KE61.6	1914111	Yellow/Green					