# 环型磁心
# Ring Core

## OD 078

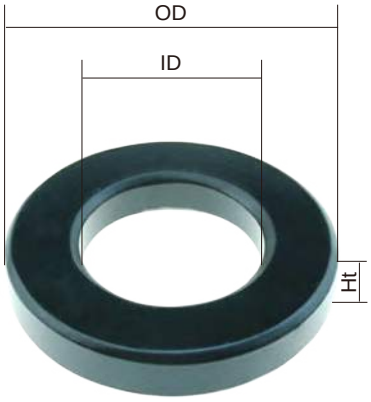


### 磁心尺寸 Core Dimensions

| | | OD(max) | ID(min) | Ht(max) |
|---|---|---|---|---|
| 涂覆前尺寸 | mm | 7.87 | 3.96 | 3.18 |
| Before Coating | inch | 0.310 | 0.156 | 0.125 |
| 涂覆后尺寸 | mm | 8.51 | 3.43 | 3.81 |
| After Coating | inch | 0.335 | 0.135 | 0.15 |

### 有效磁路参数 Effective Core Parameters

| 有效截面积 | 有效磁路长度 | 窗口面积 | 有效体积 |
|---|---|---|---|
| Cross Section | Path Length | Window Area | Volume |
| (Ae) | (le) | (Wa) | (Ve) |
| 0.062cm$^2$ | 1.787cm | 0.092cm$^2$ | 0.110mm$^3$ |
| 0.010in$^2$ | 0.704in | 18,200cmil | 0.007in$^3$ |

### 磁粉心常用规格 Available Cores

| 磁导率 Permeability (μ) | 电感因数 AL (nH/N$^2$) | 型号 Type | NS | NK | NH | NHU | NKS | NSW | NSWL | NHS | NSH | NHK | NKH |
|---|---|---|---|---|---|---|---|---|---|---|---|---|---|
| 26 | 11 | N□078026 | √ | √ | √ | √ | √ | √ | √ | √ | √ | √ | √ |
| 60 | 25 | N□078060 | √ | √ | √ | √ | √ | √ | √ | √ | √ | √ | √ |
| 75 | 31 | N□078075 | √ | √ | √ | √ | √ | | | √ | √ | √ | √ |
| 90 | 37 | N□078090 | √ | √ | √ | √ | √ | | | √ | √ | √ | √ |
| 125 | 52 | N□078125 | √ | | √ | √ | | | | | | | |

## AL vs NI Curve (60μ, 125μ)

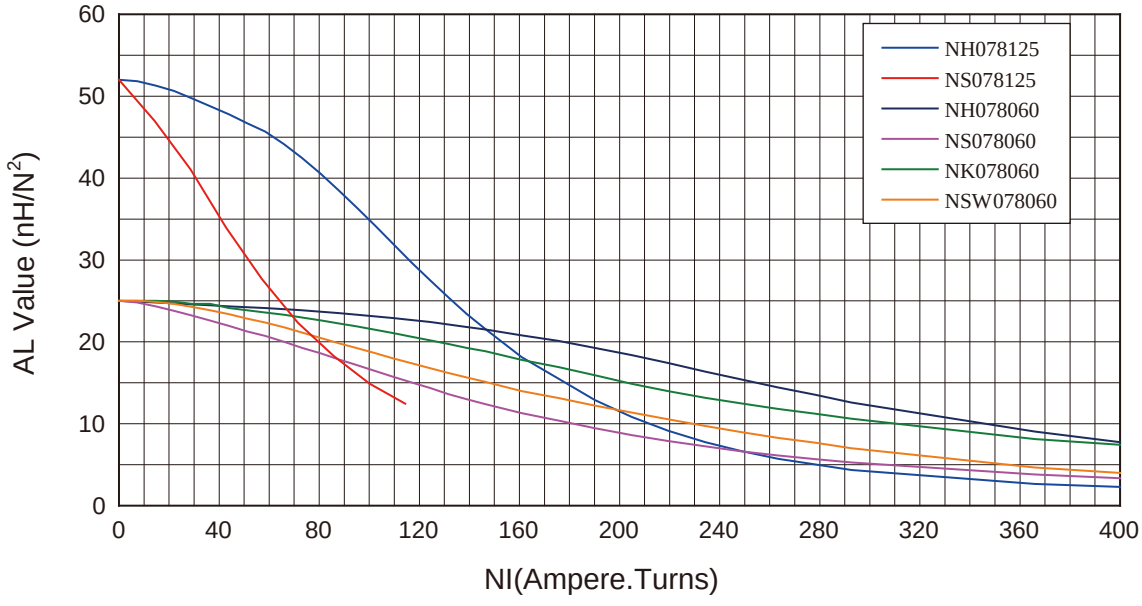

# 环型磁心
# Ring Core

## OD 102

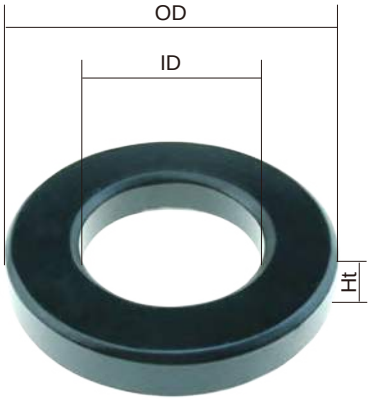


### 磁心尺寸 Core Dimensions

| | | OD(max) | ID(min) | Ht(max) |
|---|---|---|---|---|
| 涂覆前尺寸 | mm | 10.16 | 5.08 | 3.96 |
| Before Coating | inch | 0.400 | 0.200 | 0.156 |
| 涂覆后尺寸 | mm | 10.80 | 4.57 | 4.57 |
| After Coating | inch | 0.425 | 0.18 | 0.18 |

### 有效磁路参数 Effective Core Parameters

| 有效截面积 | 有效磁路长度 | 窗口面积 | 有效体积 |
|---|---|---|---|
| Cross Section | Path Length | Window Area | Volume |
| (Ae) | (le) | (Wa) | (Ve) |
| 0.1000cm$^2$ | 2.380cm | 0.164cm$^2$ | 0.238mm$^3$ |
| 0.016in$^2$ | 0.906in | 32,400cmil | 0.014in$^3$ |

### 磁粉心常用规格 Available Cores

| 磁导率 Permeability (μ) | 电感因数 AL (nH/N$^2$) | 型号 Type | NS | NK | NH | NHU | NKS | NSW | NSWL | NHS | NSH | NHK | NKH |
|---|---|---|---|---|---|---|---|---|---|---|---|---|---|
| 26 | 14 | N□102026 | √ | √ | √ | √ | √ | √ | √ | √ | √ | √ | √ |
| 60 | 32 | N□102060 | √ | √ | √ | √ | √ | √ | √ | √ | √ | √ | √ |
| 75 | 40 | N□102075 | √ | √ | √ | √ | √ | | | √ | √ | √ | √ |
| 90 | 48 | N□102090 | √ | √ | √ | √ | √ | | | √ | √ | √ | √ |
| 125 | 66 | N□102125 | √ | | √ | √ | | | | | | | |

## AL vs NI Curve (60μ, 125μ)

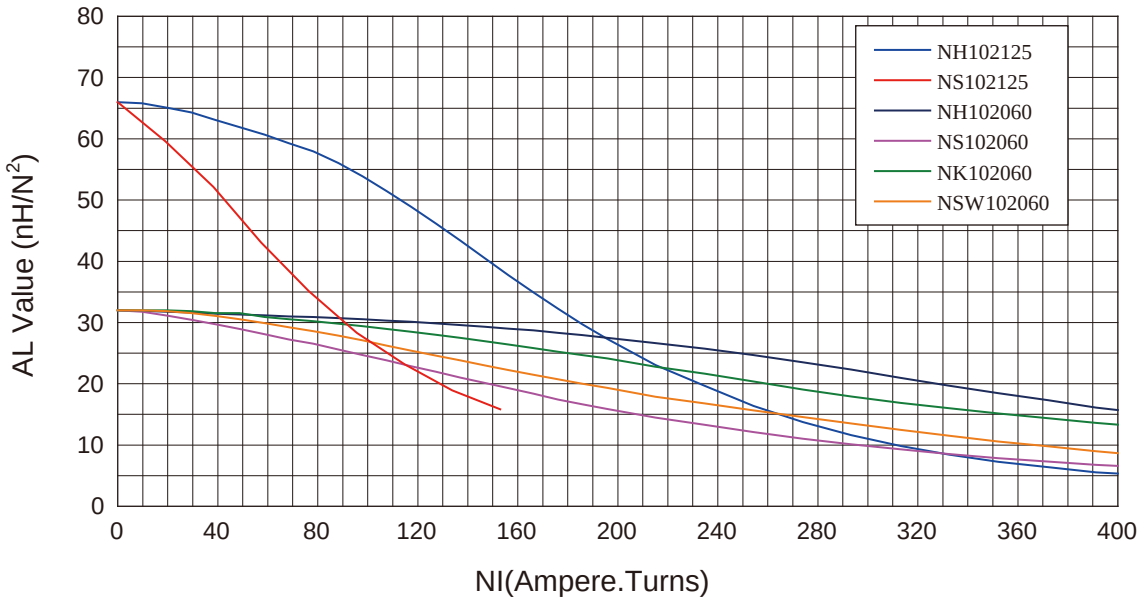

# 环型磁心
# Ring Core

## OD 127

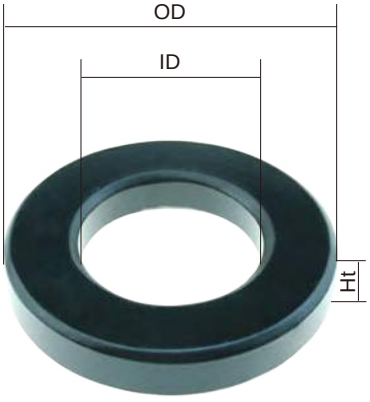


### 磁心尺寸 Core Dimensions

| | | OD(max) | ID(min) | Ht(max) |
|---|---|---|---|---|
| 涂覆前尺寸 | mm | 12.70 | 7.62 | 4.75 |
| Before Coating | inch | 0.500 | 0.300 | 0.187 |
| 涂覆后尺寸 | mm | 13.46 | 6.99 | 5.51 |
| After Coating | inch | 0.530 | 0.275 | 0.217 |

### 有效磁路参数 Effective Core Parameters

| 有效截面积 | 有效磁路长度 | 窗口面积 | 有效体积 |
|---|---|---|---|
| Cross Section | Path Length | Window Area | Volume |
| (Ae) | (le) | (Wa) | (Ve) |
| 0.114cm$^2$ | 3.120cm | 0.383cm$^2$ | 0.356mm$^3$ |
| 0.018in$^2$ | 1.229in | 75,600cmil | 0.022in$^3$ |

### 磁粉心常用规格 Available Cores

| 磁导率 Permeability (μ) | 电感因数 AL (nH/N$^2$) | 型号 Type | NS | NK | NH | NHU | NKS | NSW | NSWL | NHS | NSH | NHK | NKH |
|---|---|---|---|---|---|---|---|---|---|---|---|---|---|
| 26 | 12 | N□127026 | √ | √ | √ | √ | √ | √ | √ | √ | √ | √ | √ |
| 60 | 27 | N□127060 | √ | √ | √ | √ | √ | √ | √ | √ | √ | √ | √ |
| 75 | 34 | N□127075 | √ | √ | √ | √ | √ | | | √ | √ | √ | √ |
| 90 | 40 | N□127090 | √ | √ | √ | √ | √ | | | √ | √ | √ | √ |
| 125 | 56 | N□127125 | √ | | √ | √ | | | | | | | |

## AL vs NI Curve (60μ, 125μ)

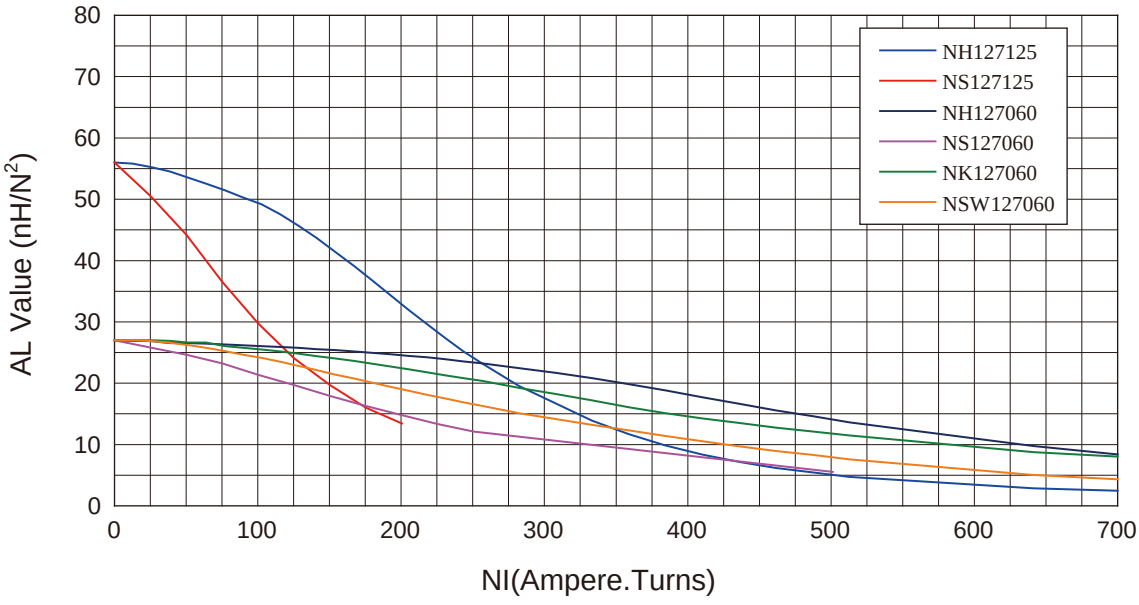

# 环型磁心
# Ring Core

## OD 166

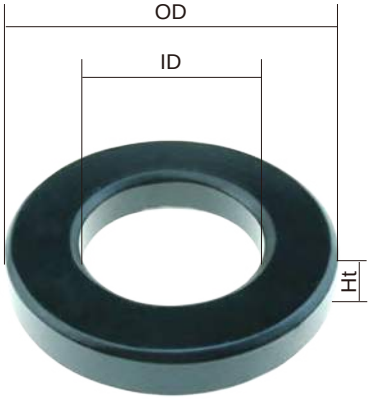


### 磁心尺寸 Core Dimensions

| | | OD(max) | ID(min) | Ht(max) |
|---|---|---|---|---|
| 涂覆前尺寸 | mm | 16.51 | 10.16 | 6.35 |
| Before Coating | inch | 0.650 | 0.400 | 0.250 |
| 涂覆后尺寸 | mm | 17.40 | 9.53 | 7.11 |
| After Coating | inch | 0.680 | 0.375 | 0.280 |

### 有效磁路参数 Effective Core Parameters

| 有效截面积 | 有效磁路长度 | 窗口面积 | 有效体积 |
|---|---|---|---|
| Cross Section | Path Length | Window Area | Volume |
| (Ae) | (le) | (Wa) | (Ve) |
| 0.192cm$^2$ | 4.110cm | 0.713cm$^2$ | 0.789mm$^3$ |
| 0.030in$^2$ | 1.619in | 140,600cmil | 0.044in$^3$ |

### 磁粉心常用规格 Available Cores

| 磁导率 Permeability (μ) | 电感因数 AL (nH/N$^2$) | 型号 Type | NS | NK | NH | NHU | NKS | NSW | NSWL | NHS | NSH | NHK | NKH |
|---|---|---|---|---|---|---|---|---|---|---|---|---|---|
| 26 | 15 | N□166026 | √ | √ | √ | √ | √ | √ | √ | √ | √ | √ | √ |
| 60 | 35 | N□166060 | √ | √ | √ | √ | √ | √ | √ | √ | √ | √ | √ |
| 75 | 43 | N□166075 | √ | √ | √ | √ | √ | | | √ | √ | √ | √ |
| 90 | 52 | N□166090 | √ | √ | √ | √ | √ | | | √ | √ | √ | √ |
| 125 | 72 | N□166125 | √ | | √ | √ | | | | | | | |

## AL vs NI Curve (60μ, 125μ)

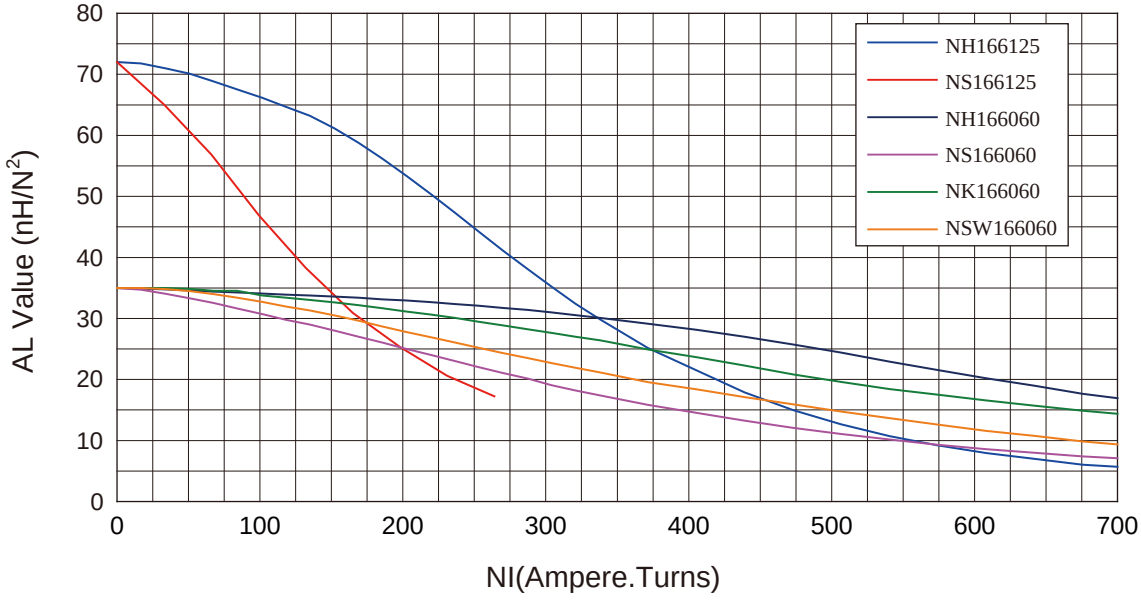

# 环型磁心
# Ring Core

## OD 172

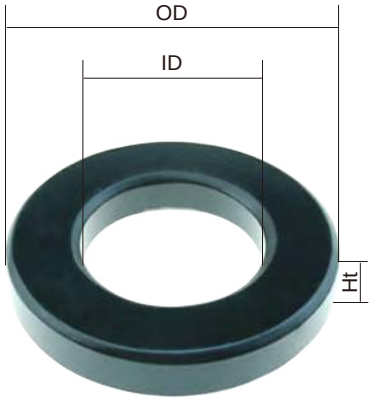


### 磁心尺寸 Core Dimensions

| | | OD(max) | ID(min) | Ht(max) |
|---|---|---|---|---|
| 涂覆前尺寸 | mm | 17.27 | 9.65 | 6.35 |
| Before Coating | inch | 0.680 | 0.380 | 0.250 |
| 涂覆后尺寸 | mm | 18.03 | 9.02 | 7.11 |
| After Coating | inch | 0.710 | 0.355 | 0.280 |

### 有效磁路参数 Effective Core Parameters

| 有效截面积 | 有效磁路长度 | 窗口面积 | 有效体积 |
|---|---|---|---|
| Cross Section | Path Length | Window Area | Volume |
| (Ae) | (le) | (Wa) | (Ve) |
| 0.232cm$^2$ | 4.140cm | 0.683cm$^2$ | 0.961mm$^3$ |
| 0.036in$^2$ | 1.630in | 126,000cmil | 0.059in$^3$ |

### 磁粉心常用规格 Available Cores

| 磁导率 Permeability (μ) | 电感因数 AL (nH/N$^2$) | 型号 Type | NS | NK | NH | NHU | NKS | NSW | NSWL | NHS | NSH | NHK | NKH |
|---|---|---|---|---|---|---|---|---|---|---|---|---|---|
| 26 | 19 | N□172026 | √ | √ | √ | √ | √ | √ | √ | √ | √ | √ | √ |
| 60 | 43 | N□172060 | √ | √ | √ | √ | √ | √ | √ | √ | √ | √ | √ |
| 75 | 53 | N□172075 | √ | √ | √ | √ | √ | | | √ | √ | √ | √ |
| 90 | 64 | N□172090 | √ | √ | √ | √ | √ | | | √ | √ | √ | √ |
| 125 | 89 | N□172125 | √ | | √ | √ | | | | | | | |

## AL vs NI Curve (60μ, 125μ)

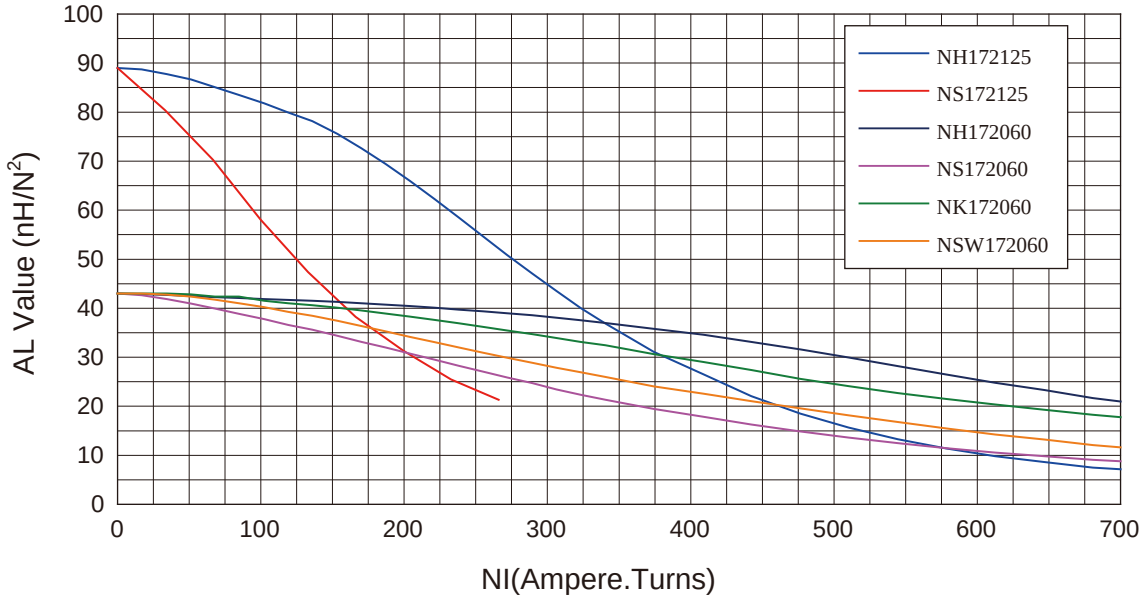

# 环型磁心
# Ring Core

## OD 203

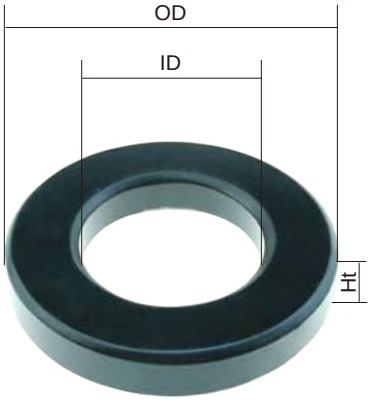


### 磁心尺寸 Core Dimensions

| | | OD(max) | ID(min) | Ht(max) |
|---|---|---|---|---|
| 涂覆前尺寸 | mm | 20.32 | 12.70 | 6.35 |
| Before Coating | inch | 0.800 | 0.500 | 0.250 |
| 涂覆后尺寸 | mm | 21.10 | 12.07 | 7.11 |
| After Coating | inch | 0.830 | 0.475 | 0.280 |

### 有效磁路参数 Effective Core Parameters

| 有效截面积 | 有效磁路长度 | 窗口面积 | 有效体积 |
|---|---|---|---|
| Cross Section | Path Length | Window Area | Volume |
| (Ae) | (le) | (Wa) | (Ve) |
| 0.226cm$^2$ | 5.090cm | 1.140cm$^2$ | 1.151mm$^3$ |
| 0.035in$^2$ | 2.010in | 225,600cmil | 0.070in$^3$ |

### 磁粉心常用规格 Available Cores

| 磁导率 Permeability (μ) | 电感因数 AL (nH/N$^2$) | 型号 Type | NS | NK | NH | NHU | NKS | NSW | NSWL | NHS | NSH | NHK | NKH |
|---|---|---|---|---|---|---|---|---|---|---|---|---|---|
| 26 | 14 | N□203026 | √ | √ | √ | √ | √ | √ | √ | √ | √ | √ | √ |
| 60 | 32 | N□203060 | √ | √ | √ | √ | √ | √ | √ | √ | √ | √ | √ |
| 75 | 41 | N□203075 | √ | √ | √ | √ | √ | | | √ | √ | √ | √ |
| 90 | 49 | N□203090 | √ | √ | √ | √ | √ | | | √ | √ | √ | √ |
| 125 | 68 | N□203125 | √ | | √ | √ | | | | | | | |

## AL vs NI Curve (60μ, 125μ)

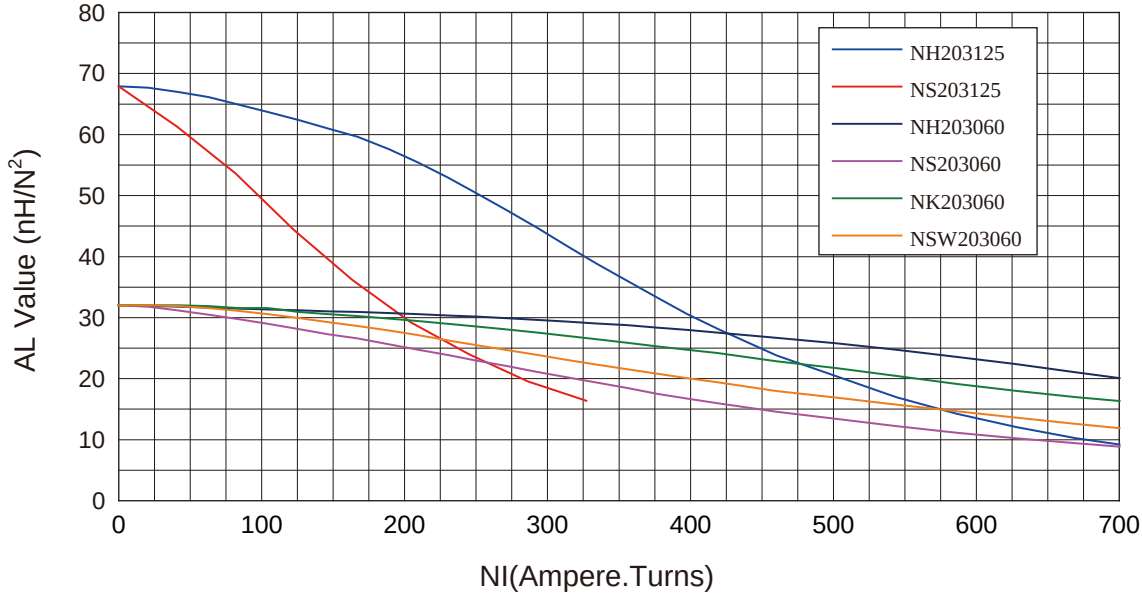

# 环型磁心
# Ring Core

## OD 229

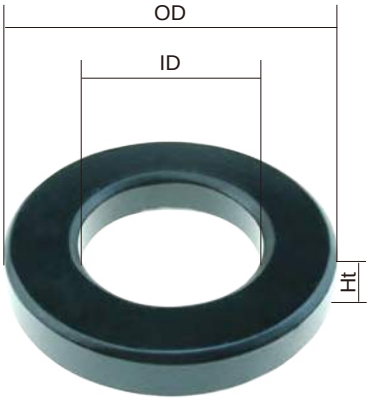


### 磁心尺寸 Core Dimensions

| | | OD(max) | ID(min) | Ht(max) |
|---|---|---|---|---|
| 涂覆前尺寸 | mm | 22.86 | 13.97 | 7.62 |
| Before Coating | inch | 0.900 | 0.550 | 0.300 |
| 涂覆后尺寸 | mm | 23.62 | 13.39 | 8.38 |
| After Coating | inch | 0.930 | 0.527 | 0.330 |

### 有效磁路参数 Effective Core Parameters

| 有效截面积 | 有效磁路长度 | 窗口面积 | 有效体积 |
|---|---|---|---|
| Cross Section | Path Length | Window Area | Volume |
| (Ae) | (le) | (Wa) | (Ve) |
| 0.331cm$^2$ | 5.670cm | 1.410cm$^2$ | 1.877mm$^3$ |
| 0.051in$^2$ | 2.230in | 277,700cmil | 0.115in$^3$ |

### 磁粉心常用规格 Available Cores

| 磁导率 Permeability (μ) | 电感因数 AL (nH/N$^2$) | 型号 Type | NS | NK | NH | NHU | NKS | NSW | NSWL | NHS | NSH | NHK | NKH |
|---|---|---|---|---|---|---|---|---|---|---|---|---|---|
| 26 | 19 | N□229026 | √ | √ | √ | √ | √ | √ | √ | √ | √ | √ | √ |
| 60 | 43 | N□229060 | √ | √ | √ | √ | √ | √ | √ | √ | √ | √ | √ |
| 75 | 54 | N□229075 | √ | √ | √ | √ | √ | | | √ | √ | √ | √ |
| 90 | 65 | N□229090 | √ | √ | √ | √ | √ | | | √ | √ | √ | √ |
| 125 | 90 | N□229125 | √ | | √ | √ | | | | | | | |

## AL vs NI Curve (60μ, 125μ)

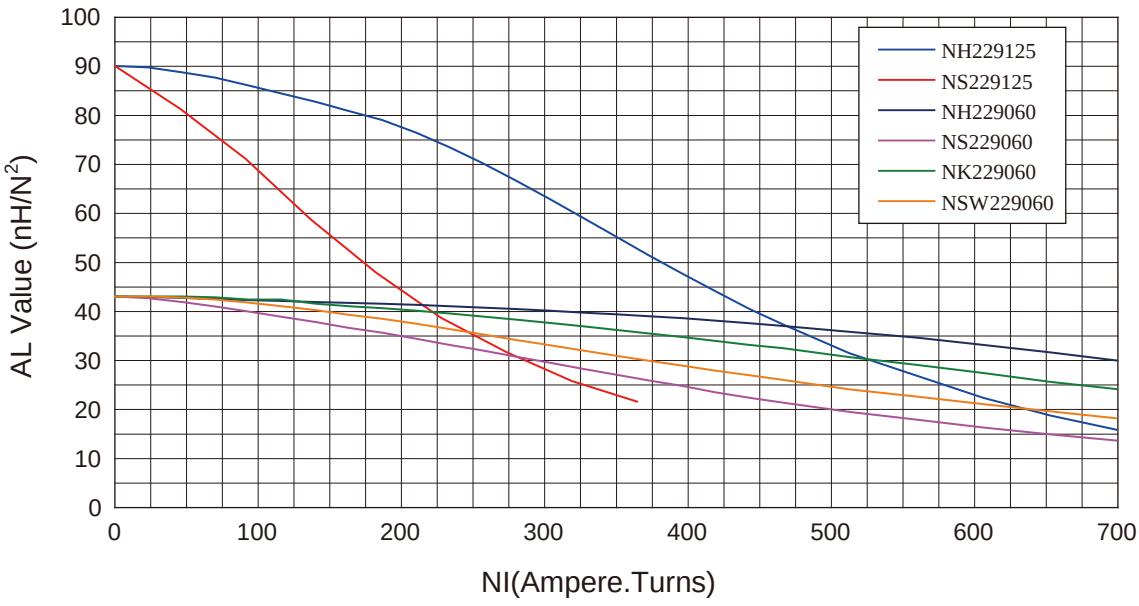

# 环型磁心
# Ring Core

## OD 234

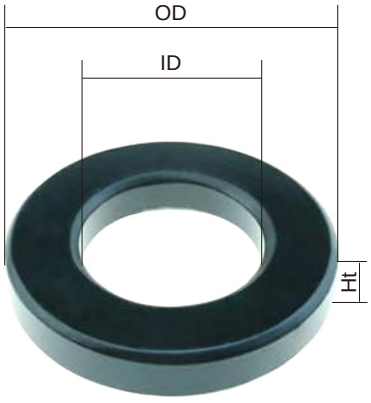


### 磁心尺寸 Core Dimensions

| | | OD(max) | ID(min) | Ht(max) |
|---|---|---|---|---|
| 涂覆前尺寸 | mm | 23.57 | 14.40 | 8.89 |
| Before Coating | inch | 0.928 | 0.567 | 0.350 |
| 涂覆后尺寸 | mm | 24.30 | 13.77 | 9.70 |
| After Coating | inch | 0.956 | 0.542 | 0.382 |

### 有效磁路参数 Effective Core Parameters

| 有效截面积 | 有效磁路长度 | 窗口面积 | 有效体积 |
|---|---|---|---|
| Cross Section | Path Length | Window Area | Volume |
| (Ae) | (le) | (Wa) | (Ve) |
| 0.388cm$^2$ | 5.880cm | 1.490cm$^2$ | 2.281mm$^3$ |
| 0.061in$^2$ | 2.320in | 293,800cmil | 0.142in$^3$ |

### 磁粉心常用规格 Available Cores

| 磁导率 Permeability (μ) | 电感因数 AL (nH/N$^2$) | 型号 Type | NS | NK | NH | NHU | NKS | NSW | NSWL | NHS | NSH | NHK | NKH |
|---|---|---|---|---|---|---|---|---|---|---|---|---|---|
| 26 | 22 | N□234026 | √ | √ | √ | √ | √ | √ | √ | √ | √ | √ | √ |
| 60 | 51 | N□234060 | √ | √ | √ | √ | √ | √ | √ | √ | √ | √ | √ |
| 75 | 63 | N□234075 | √ | √ | √ | √ | √ | | | √ | √ | √ | √ |
| 90 | 76 | N□234090 | √ | √ | √ | √ | √ | | | √ | √ | √ | √ |
| 125 | 105 | N□234125 | √ | | √ | √ | | | | | | | |

## AL vs NI Curve (60μ, 125μ)

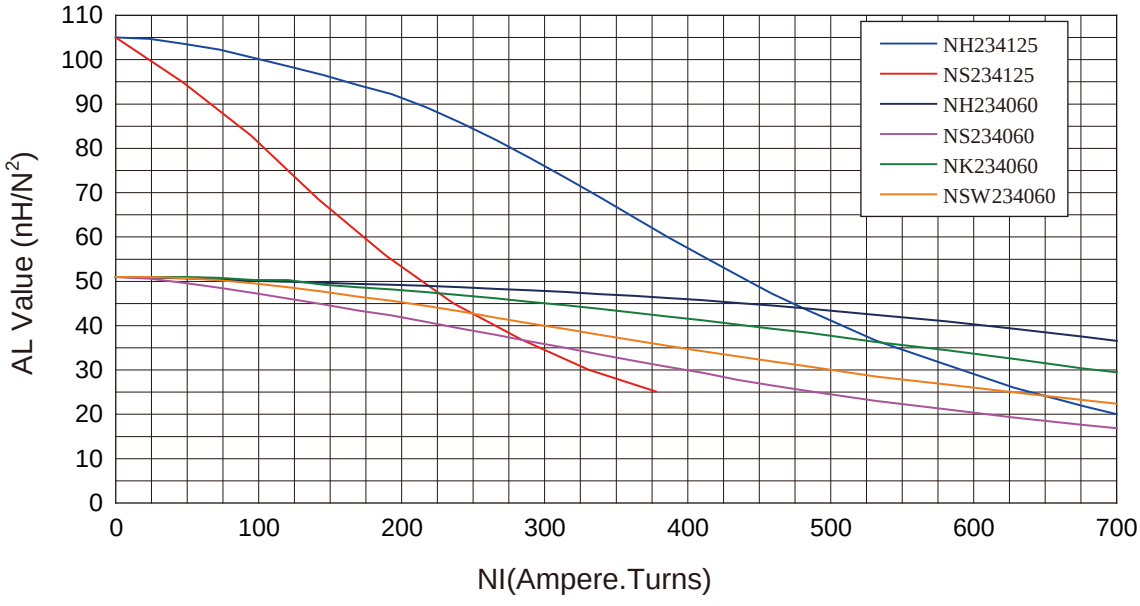

# 环型磁心
# Ring Core

## OD 270

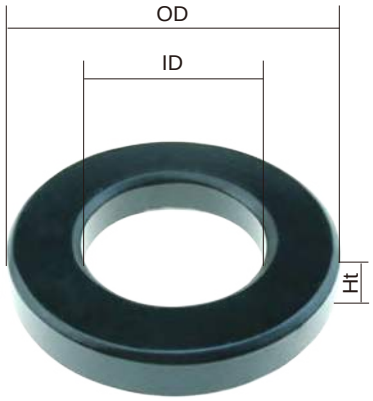


### 磁心尺寸 Core Dimensions

| | | OD(max) | ID(min) | Ht(max) |
|---|---|---|---|---|
| 涂覆前尺寸 | mm | 26.92 | 14.73 | 11.18 |
| Before Coating | inch | 1.060 | 0.580 | 0.440 |
| 涂覆后尺寸 | mm | 27.70 | 14.10 | 11.99 |
| After Coating | inch | 1.090 | 0.555 | 0.472 |

### 有效磁路参数 Effective Core Parameters

| 有效截面积 Cross Section (Ae) | 有效磁路长度 Path Length (le) | 窗口面积 Window Area (Wa) | 有效体积 Volume (Ve) |
|---|---|---|---|
| 0.654cm$^2$ | 6.350cm | 1.560cm$^2$ | 4.154mm$^3$ |
| 0.101in$^2$ | 2.500in | 308,000cmil | 0.254in$^3$ |

### 磁粉心常用规格 Available Cores

| 磁导率 Permeability (μ) | 电感因数 AL (nH/N$^2$) | 型号 Type | NS | NK | NH | NHU | NKS | NSW | NSWL | NHS | NSH | NHK | NKH |
|---|---|---|---|---|---|---|---|---|---|---|---|---|---|
| 26 | 32 | N□270026 | √ | √ | √ | √ | √ | √ | √ | √ | √ | √ | √ |
| 60 | 75 | N□270060 | √ | √ | √ | √ | √ | √ | √ | √ | √ | √ | √ |
| 75 | 94 | N□270075 | √ | √ | √ | √ | √ | | | √ | √ | √ | √ |
| 90 | 113 | N□270090 | √ | √ | √ | √ | √ | | | √ | √ | √ | √ |
| 125 | 157 | N□270125 | √ | | √ | √ | | | | | | | |

## AL vs NI Curve (60μ, 125μ)

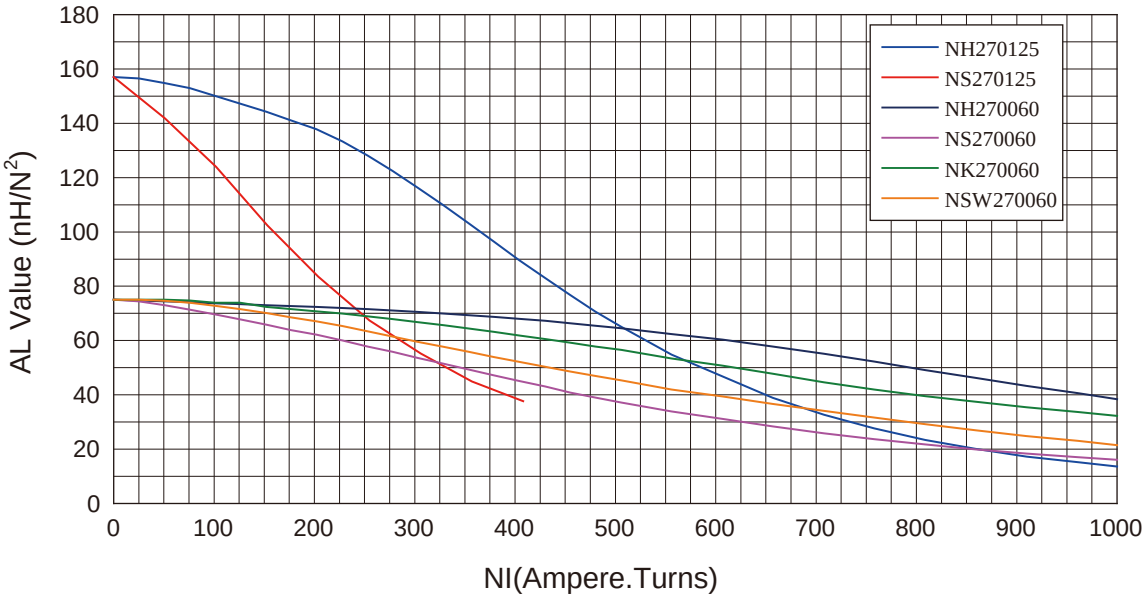

# 环型磁心
# Ring Core

## OD 330

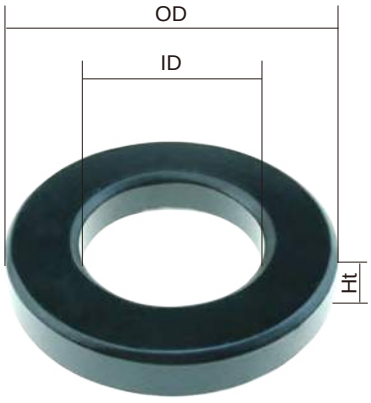


### 磁心尺寸 Core Dimensions

| | | OD(max) | ID(min) | Ht(max) |
|---|---|---|---|---|
| 涂覆前尺寸 | mm | 33.02 | 19.94 | 10.67 |
| Before Coating | inch | 1.300 | 0.785 | 0.420 |
| 涂覆后尺寸 | mm | 33.83 | 19.30 | 11.61 |
| After Coating | inch | 1.332 | 0.760 | 0.457 |

### 有效磁路参数 Effective Core Parameters

| 有效截面积 | 有效磁路长度 | 窗口面积 | 有效体积 |
|---|---|---|---|
| Cross Section | Path Length | Window Area | Volume |
| (Ae) | (le) | (Wa) | (Ve) |
| 0.672cm$^2$ | 8.150cm | 2.930cm$^2$ | 5.477mm$^3$ |
| 0.104in$^2$ | 3.210in | 577,600cmil | 0.335in$^3$ |

### 磁粉心常用规格 Available Cores

| 磁导率 Permeability (μ) | 电感因数 AL (nH/N$^2$) | 型号 Type | NS | NK | NH | NHU | NKS | NSW | NSWL | NHS | NSH | NHK | NKH |
|---|---|---|---|---|---|---|---|---|---|---|---|---|---|
| 26 | 28 | N□330026 | √ | √ | √ | √ | √ | √ | √ | √ | √ | √ | √ |
| 60 | 61 | N□330060 | √ | √ | √ | √ | √ | √ | √ | √ | √ | √ | √ |
| 75 | 76 | N□330075 | √ | √ | √ | √ | √ | | | √ | √ | √ | √ |
| 90 | 91 | N□330090 | √ | √ | √ | √ | √ | | | √ | √ | √ | √ |
| 125 | 127 | N□330125 | √ | | √ | √ | | | | | | | |

## AL vs NI Curve (60μ, 125μ)

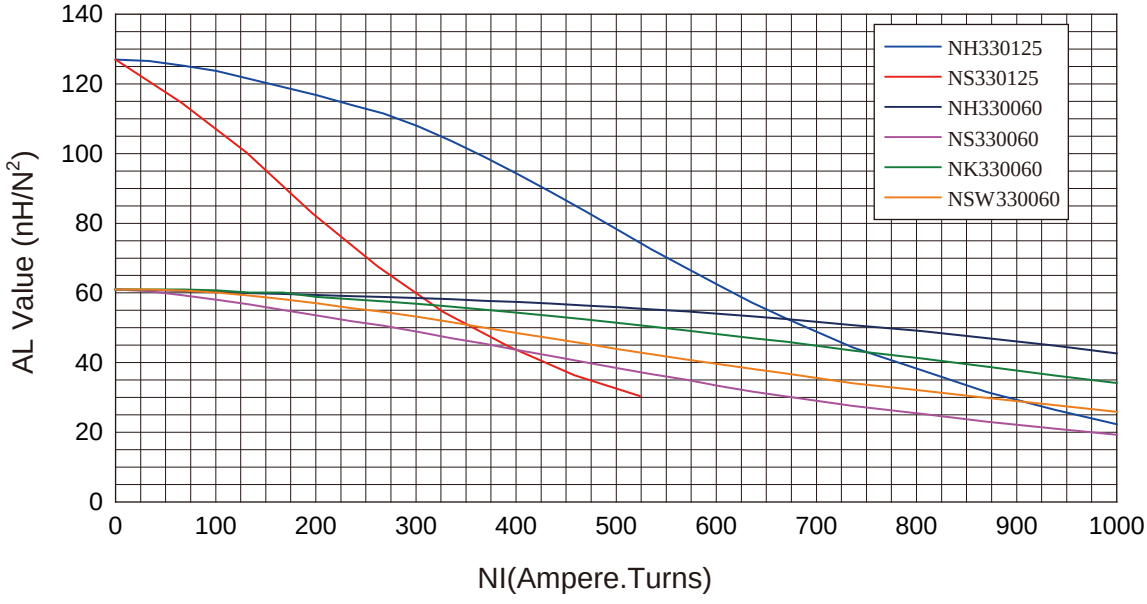

# 环型磁心
# Ring Core

## OD 343

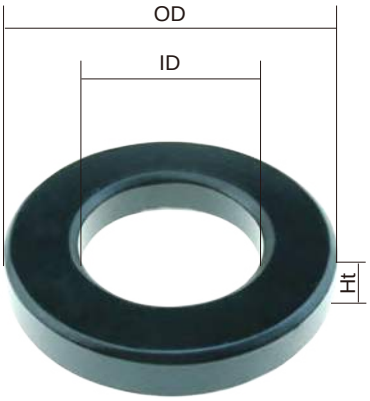


### 磁心尺寸 Core Dimensions

| | | OD(max) | ID(min) | Ht(max) |
|---|---|---|---|---|
| 涂覆前尺寸 | mm | 34.29 | 23.37 | 8.89 |
| Before Coating | inch | 1.350 | 0.920 | 0.350 |
| 涂覆后尺寸 | mm | 35.20 | 22.60 | 9.83 |
| After Coating | inch | 1.385 | 0.888 | 0.387 |

### 有效磁路参数 Effective Core Parameters

| 有效截面积 | 有效磁路长度 | 窗口面积 | 有效体积 |
|---|---|---|---|
| Cross Section | Path Length | Window Area | Volume |
| (Ae) | (le) | (Wa) | (Ve) |
| 0.454cm$^2$ | 8.950cm | 4.010cm$^2$ | 4.063mm$^3$ |
| 0.070in$^2$ | 3.530in | 788,500cmil | 0.249in$^3$ |

### 磁粉心常用规格 Available Cores

| 磁导率 Permeability (μ) | 电感因数 AL (nH/N$^2$) | 型号 Type | NS | NK | NH | NHU | NKS | NSW | NSWL | NHS | NSH | NHK | NKH |
|---|---|---|---|---|---|---|---|---|---|---|---|---|---|
| 26 | 16 | N□343026 | √ | √ | √ | √ | √ | √ | √ | √ | √ | √ | √ |
| 60 | 38 | N□343060 | √ | √ | √ | √ | √ | √ | √ | √ | √ | √ | √ |
| 75 | 47 | N□343075 | √ | √ | √ | √ | √ | | | √ | √ | √ | √ |
| 90 | 57 | N□343090 | √ | √ | √ | √ | √ | | | √ | √ | √ | √ |
| 125 | 79 | N□343125 | √ | | √ | √ | | | | | | | |

## AL vs NI Curve (60μ, 125μ)

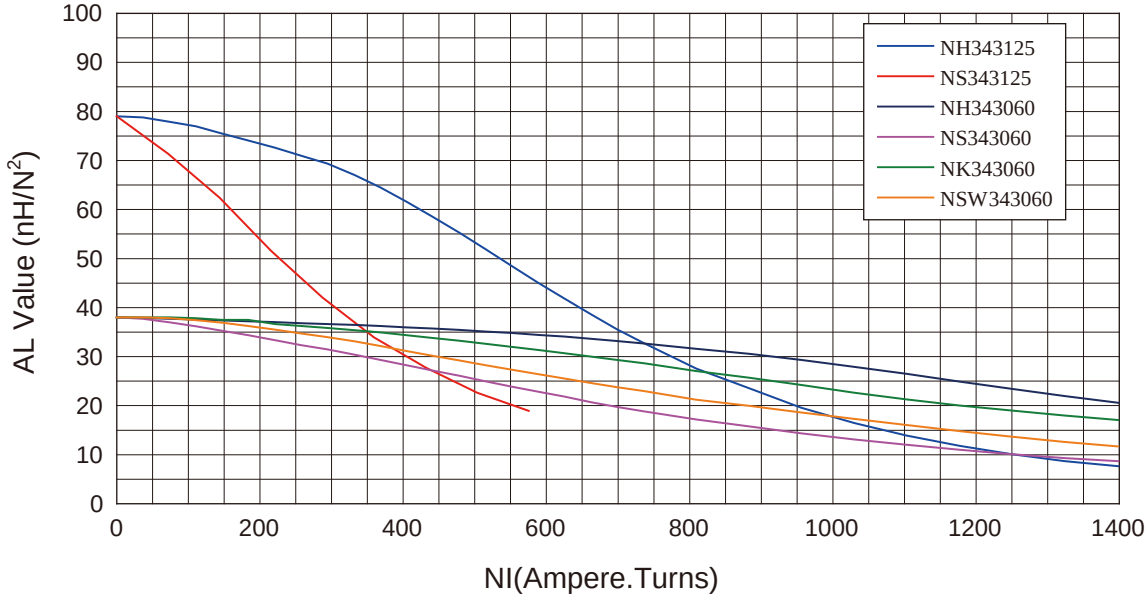

# 环型磁心
# Ring Core

## OD 358

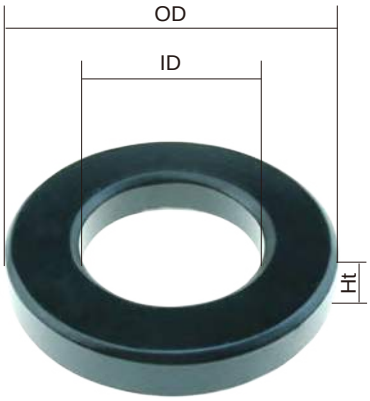


### 磁心尺寸 Core Dimensions

| | | OD(max) | ID(min) | Ht(max) |
|---|---|---|---|---|
| 涂覆前尺寸 | mm | 35.81 | 22.35 | 10.46 |
| Before Coating | inch | 1.410 | 0.880 | 0.412 |
| 涂覆后尺寸 | mm | 36.70 | 21.50 | 11.28 |
| After Coating | inch | 1.445 | 0.848 | 0.444 |

### 有效磁路参数 Effective Core Parameters

| 有效截面积 | 有效磁路长度 | 窗口面积 | 有效体积 |
|---|---|---|---|
| Cross Section | Path Length | Window Area | Volume |
| (Ae) | (le) | (Wa) | (Ve) |
| 0.678cm$^2$ | 8.980cm | 3.640cm$^2$ | 6.088mm$^3$ |
| 0.105in$^2$ | 3.540in | 719,100cmil | 0.372in$^3$ |

### 磁粉心常用规格 Available Cores

| 磁导率 Permeability (μ) | 电感因数 AL (nH/N$^2$) | 型号 Type | NS | NK | NH | NHU | NKS | NSW | NSWL | NHS | NSH | NHK | NKH |
|---|---|---|---|---|---|---|---|---|---|---|---|---|---|
| 26 | 24 | N□358026 | √ | √ | √ | √ | √ | √ | √ | √ | √ | √ | √ |
| 60 | 56 | N□358060 | √ | √ | √ | √ | √ | √ | √ | √ | √ | √ | √ |
| 75 | 70 | N□358075 | √ | √ | √ | √ | √ | | | √ | √ | √ | √ |
| 90 | 84 | N□358090 | √ | √ | √ | √ | √ | | | √ | √ | √ | √ |
| 125 | 117 | N□358125 | √ | | √ | √ | | | | | | | |

## AL vs NI Curve (60μ, 125μ)

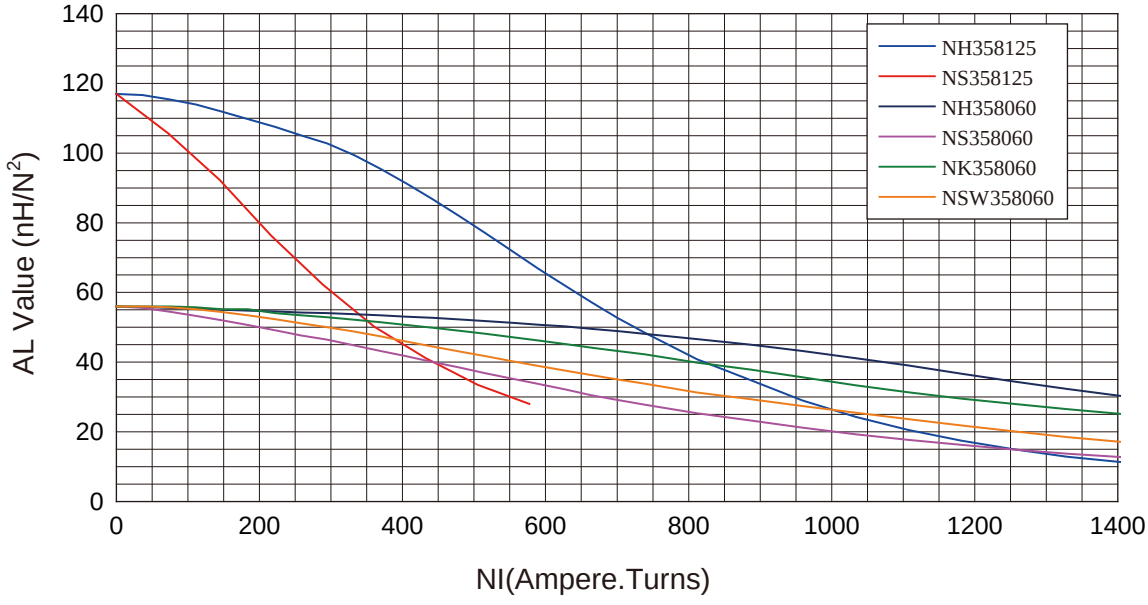

# 环型磁心
# Ring Core

## OD 378

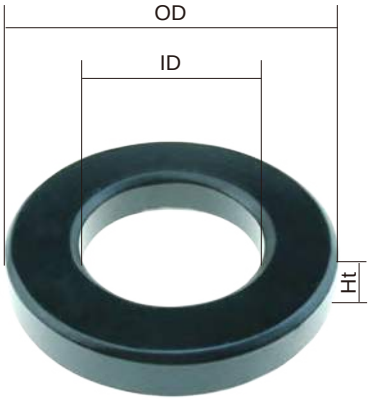


### 磁心尺寸 Core Dimensions

| | | OD(max) | ID(min) | Ht(max) |
|---|---|---|---|---|
| 涂覆前尺寸 | mm | 37.90 | 22.90 | 15.0 |
| Before Coating | inch | 1.492 | 0.902 | 0.591 |
| 涂覆后尺寸 | mm | 38.70 | 22.10 | 16.00 |
| After Coating | inch | 1.524 | 0.870 | 0.630 |

### 有效磁路参数 Effective Core Parameters

| 有效截面积 | 有效磁路长度 | 窗口面积 | 有效体积 |
|---|---|---|---|
| Cross Section | Path Length | Window Area | Volume |
| (Ae) | (le) | (Wa) | (Ve) |
| 1.102cm$^2$ | 9.158cm | 3.834cm$^2$ | 10.088mm$^3$ |
| 0.171in$^2$ | 3.610in | 594,300cmil | 0.616in$^3$ |

### 磁粉心常用规格 Available Cores

| 磁导率 Permeability (μ) | 电感因数 AL (nH/N$^2$) | 型号 Type | NS | NK | NH | NHU | NKS | NSW | NSWL | NHS | NSH | NHK | NKH |
|---|---|---|---|---|---|---|---|---|---|---|---|---|---|
| 26 | 39 | N□378026 | √ | √ | √ | √ | √ | √ | √ | √ | √ | √ | √ |
| 60 | 90 | N□378060 | √ | √ | √ | √ | √ | √ | √ | √ | √ | √ | √ |
| 75 | 113 | N□378075 | √ | √ | √ | √ | √ | | | √ | √ | √ | √ |
| 90 | 135 | N□378090 | √ | √ | √ | √ | √ | | | √ | √ | √ | √ |
| 125 | 187 | N□378125 | √ | | √ | √ | | | | | | | |

## AL vs NI Curve (60μ, 125μ)

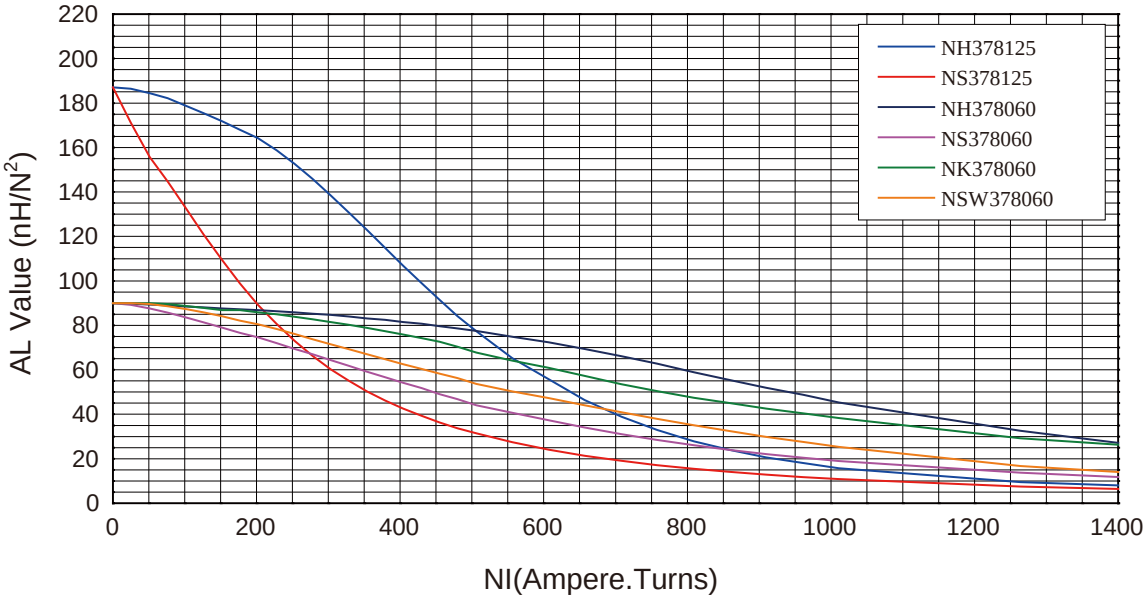

# 环型磁心
# Ring Core

## OD 400

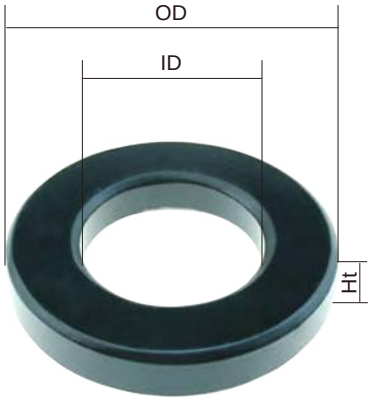


### 磁心尺寸 Core Dimensions

| | | OD(max) | ID(min) | Ht(max) |
|---|---|---|---|---|
| 涂覆前尺寸 | mm | 39.88 | 24.13 | 14.48 |
| Before Coating | inch | 1.570 | 0.950 | 0.570 |
| 涂覆后尺寸 | mm | 40.70 | 23.30 | 15.37 |
| After Coating | inch | 1.602 | 0.918 | 0.605 |

### 有效磁路参数 Effective Core Parameters

| 有效截面积 | 有效磁路长度 | 窗口面积 | 有效体积 |
|---|---|---|---|
| Cross Section | Path Length | Window Area | Volume |
| (Ae) | (le) | (Wa) | (Ve) |
| 1.072cm$^2$ | 9.840cm | 4.270cm$^2$ | 10.549mm$^3$ |
| 0.166in$^2$ | 3.880in | 842,700cmil | 0.645in$^3$ |

### 磁粉心常用规格 Available Cores

| 磁导率 Permeability (μ) | 电感因数 AL (nH/N$^2$) | 型号 Type | NS | NK | NH | NHU | NKS | NSW | NSWL | NHS | NSH | NHK | NKH |
|---|---|---|---|---|---|---|---|---|---|---|---|---|---|
| 26 | 35 | N□400026 | √ | √ | √ | √ | √ | √ | √ | √ | √ | √ | √ |
| 60 | 81 | N□400060 | √ | √ | √ | √ | √ | √ | √ | √ | √ | √ | √ |
| 75 | 101 | N□400075 | √ | √ | √ | √ | √ | | | √ | √ | √ | √ |
| 90 | 121 | N□400090 | √ | √ | √ | √ | √ | | | √ | √ | √ | √ |
| 125 | 168 | N□400125 | √ | | √ | √ | | | | | | | |

## AL vs NI Curve (60μ, 125μ)

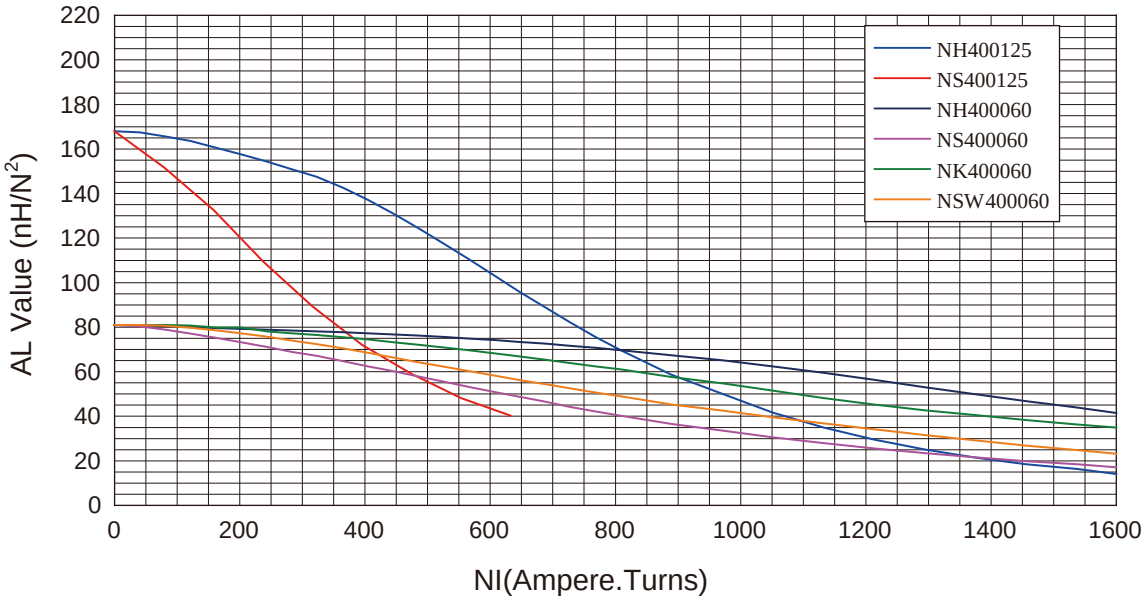

# 环型磁心
# Ring Core

## OD 401

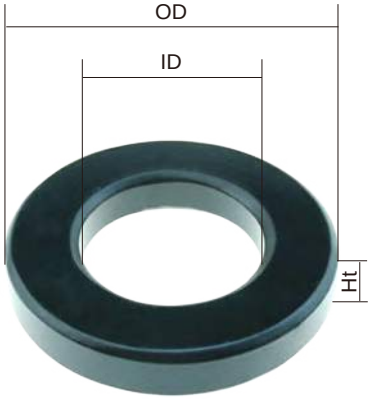


### 磁心尺寸 Core Dimensions

| | | OD(max) | ID(min) | Ht(max) |
|---|---|---|---|---|
| 涂覆前尺寸 | mm | 40.13 | 22.08 | 17.00 |
| Before Coating | inch | 1.580 | 0.869 | 0.669 |
| 涂覆后尺寸 | mm | 40.94 | 21.27 | 17.89 |
| After Coating | inch | 1.612 | 0.837 | 0.704 |

### 有效磁路参数 Effective Core Parameters

| 有效截面积 | 有效磁路长度 | 窗口面积 | 有效体积 |
|---|---|---|---|
| Cross Section | Path Length | Window Area | Volume |
| (Ae) | (le) | (Wa) | (Ve) |
| 1.537cm$^2$ | 9.510cm | 3.551cm$^2$ | 15.043mm$^3$ |
| 0.237in$^2$ | 3.671in | 700,725cmil | 0.918in$^3$ |

### 磁粉心常用规格 Available Cores

| 磁导率 Permeability (μ) | 电感因数 AL (nH/N$^2$) | 型号 Type | NS | NK | NH | NHU | NKS | NSW | NSWL | NHS | NSH | NHK | NKH |
|---|---|---|---|---|---|---|---|---|---|---|---|---|---|
| 26 | 53 | N□401026 | √ | √ | √ | √ | √ | √ | √ | √ | √ | √ | √ |
| 60 | 119 | N□401060 | √ | √ | √ | √ | √ | √ | √ | √ | √ | √ | √ |
| 75 | 153 | N□401075 | √ | √ | √ | √ | √ | | | √ | √ | √ | √ |
| 90 | 183 | N□401090 | √ | √ | √ | √ | √ | | | √ | √ | √ | √ |
| 125 | 254 | N□401125 | √ | | √ | √ | | | | | | | |

## AL vs NI Curve (60μ, 125μ)

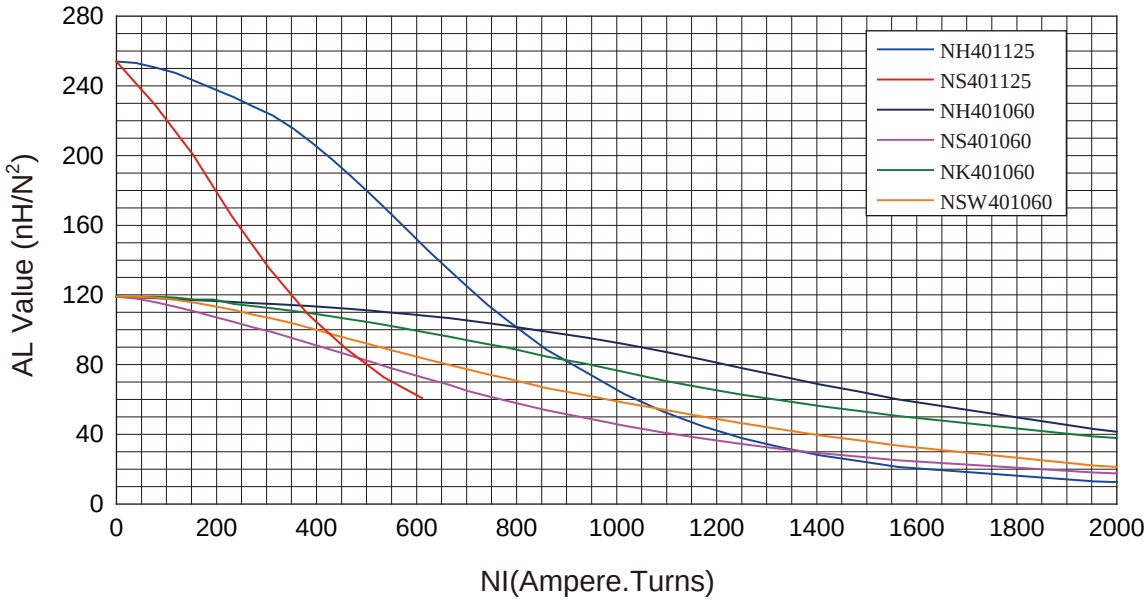

# 环型磁心
# Ring Core

## OD 467

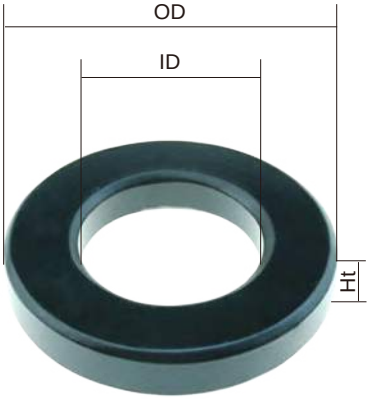


### 磁心尺寸 Core Dimensions

| | | OD(max) | ID(min) | Ht(max) |
|---|---|---|---|---|
| 涂覆前尺寸 | mm | 46.74 | 24.13 | 18.03 |
| Before Coating | inch | 1.840 | 0.950 | 0.710 |
| 涂覆后尺寸 | mm | 47.60 | 23.30 | 18.92 |
| After Coating | inch | 1.875 | 0.918 | 0.745 |

### 有效磁路参数 Effective Core Parameters

| 有效截面积 | 有效磁路长度 | 窗口面积 | 有效体积 |
|---|---|---|---|
| Cross Section | Path Length | Window Area | Volume |
| (Ae) | (le) | (Wa) | (Ve) |
| 1.990cm$^2$ | 10.740cm | 4.270cm$^2$ | 21.373mm$^3$ |
| 0.308in$^2$ | 4.230in | 842,700cmil | 1.303in$^3$ |

### 磁粉心常用规格 Available Cores

| 磁导率 Permeability (μ) | 电感因数 AL (nH/N$^2$) | 型号 Type | NS | NK | NH | NHU | NKS | NSW | NSWL | NHS | NSH | NHK | NKH |
|---|---|---|---|---|---|---|---|---|---|---|---|---|---|
| 26 | 59 | N□467026 | √ | √ | √ | √ | √ | √ | √ | √ | √ | √ | √ |
| 60 | 135 | N□467060 | √ | √ | √ | √ | √ | √ | √ | √ | √ | √ | √ |
| 75 | 169 | N□467075 | √ | √ | √ | √ | √ | | | √ | √ | √ | √ |
| 90 | 202 | N□467090 | √ | √ | √ | √ | √ | | | √ | √ | √ | √ |
| 125 | 281 | N□467125 | √ | | √ | √ | | | | | | | |

## AL vs NI Curve (60μ, 125μ)

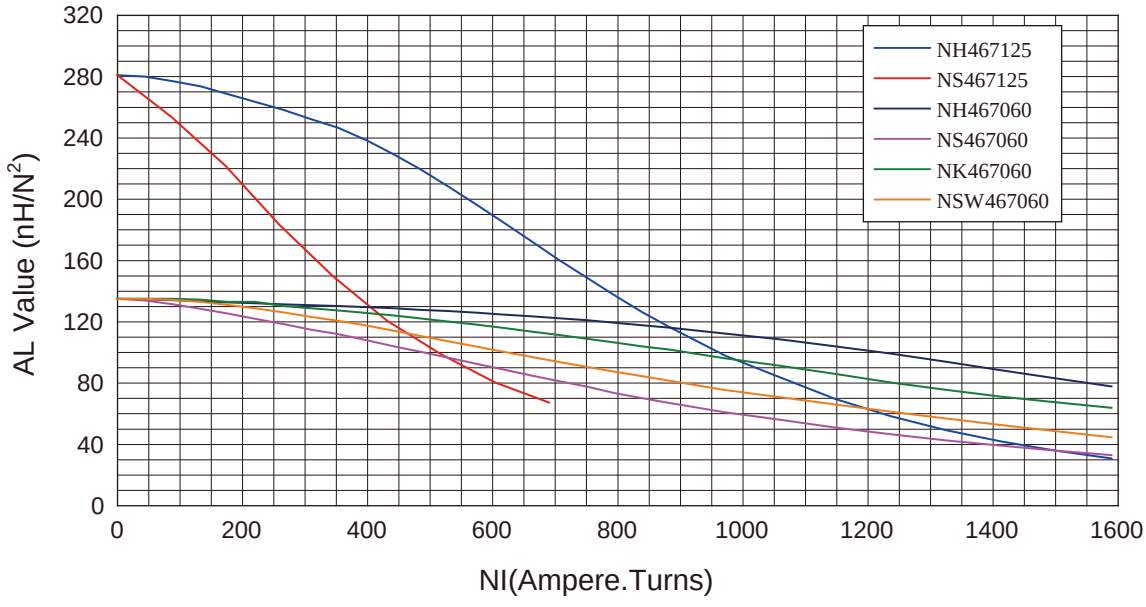

# 环型磁心
# Ring Core

## OD 468

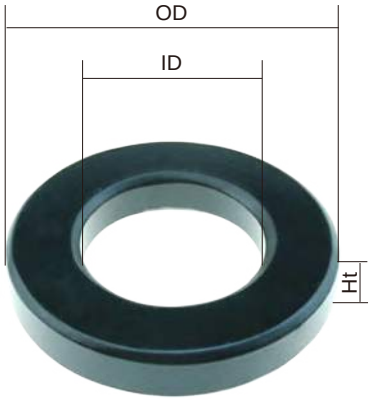


### 磁心尺寸 Core Dimensions

| | | OD(max) | ID(min) | Ht(max) |
|---|---|---|---|---|
| 涂覆前尺寸 | mm | 46.74 | 28.70 | 15.24 |
| Before Coating | inch | 1.840 | 1.130 | 0.600 |
| 涂覆后尺寸 | mm | 47.60 | 27.90 | 16.13 |
| After Coating | inch | 1.875 | 1.098 | 0.635 |

### 有效磁路参数 Effective Core Parameters

| 有效截面积 | 有效磁路长度 | 窗口面积 | 有效体积 |
|---|---|---|---|
| Cross Section | Path Length | Window Area | Volume |
| (Ae) | (le) | (Wa) | (Ve) |
| 1.340cm$^2$ | 11.630cm | 6.110cm$^2$ | 15.584mm$^3$ |
| 0.208in$^2$ | 4.580in | 1,206,000cmil | 0.953in$^3$ |

### 磁粉心常用规格 Available Cores

| 磁导率 Permeability (μ) | 电感因数 AL (nH/N$^2$) | 型号 Type | NS | NK | NH | NHU | NKS | NSW | NSWL | NHS | NSH | NHK | NKH |
|---|---|---|---|---|---|---|---|---|---|---|---|---|---|
| 26 | 37 | N□468026 | √ | √ | √ | √ | √ | √ | √ | √ | √ | √ | √ |
| 60 | 86 | N□468060 | √ | √ | √ | √ | √ | √ | √ | √ | √ | √ | √ |
| 75 | 107 | N□468075 | √ | √ | √ | √ | √ | | | √ | √ | √ | √ |
| 90 | 128 | N□468090 | √ | √ | √ | √ | √ | | | √ | √ | √ | √ |
| 125 | 178 | N□468125 | √ | | √ | √ | | | | | | | |

## AL vs NI Curve (60μ, 125μ)

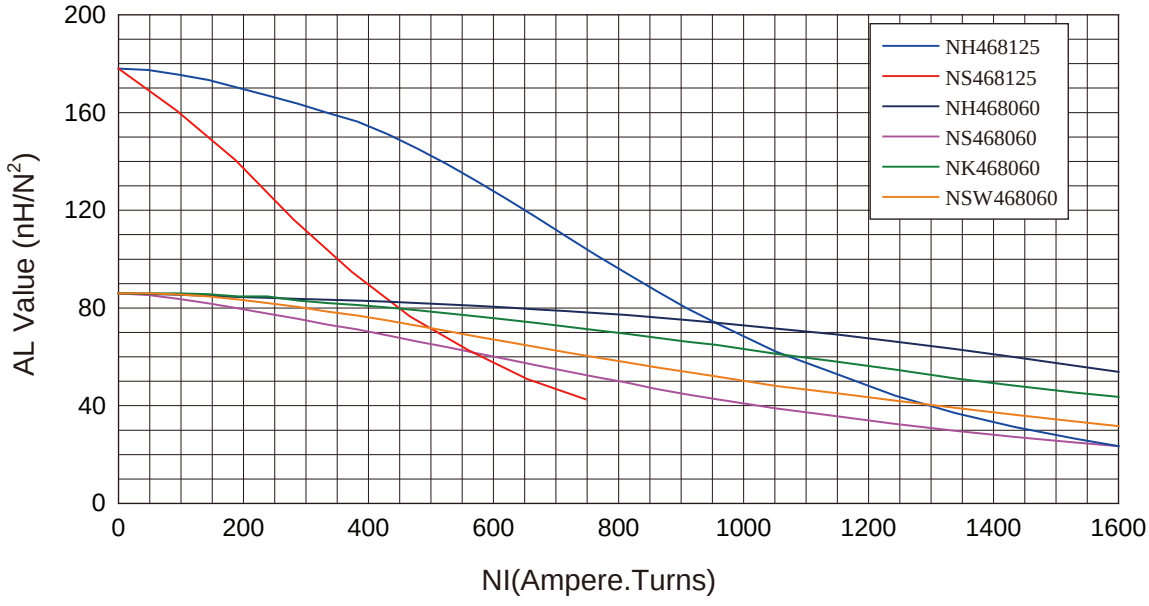

# 环型磁心
# Ring Core

## OD 508

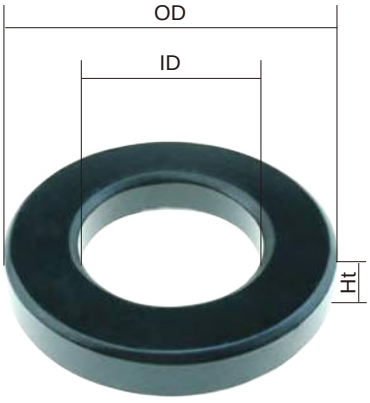


### 磁心尺寸 Core Dimensions

| | | OD(max) | ID(min) | Ht(max) |
|---|---|---|---|---|
| 涂覆前尺寸 | mm | 50.80 | 31.75 | 13.46 |
| Before Coating | inch | 2.000 | 1.250 | 0.530 |
| 涂覆后尺寸 | mm | 51.70 | 30.90 | 14.35 |
| After Coating | inch | 2.035 | 1.218 | 0.565 |

### 有效磁路参数 Effective Core Parameters

| 有效截面积 | 有效磁路长度 | 窗口面积 | 有效体积 |
|---|---|---|---|
| Cross Section | Path Length | Window Area | Volume |
| (Ae) | (le) | (Wa) | (Ve) |
| 1.251cm$^2$ | 12.730cm | 7.500cm$^2$ | 15.929mm$^3$ |
| 0.194in$^2$ | 5.020in | 1,484,000cmil | 0.974in$^3$ |

### 磁粉心常用规格 Available Cores

| 磁导率 Permeability (μ) | 电感因数 AL (nH/N$^2$) | 型号 Type | NS | NK | NH | NHU | NKS | NSW | NSWL | NHS | NSH | NHK | NKH |
|---|---|---|---|---|---|---|---|---|---|---|---|---|---|
| 26 | 32 | N□508026 | √ | √ | √ | √ | √ | √ | √ | √ | √ | √ | √ |
| 60 | 73 | N□508060 | √ | √ | √ | √ | √ | √ | √ | √ | √ | √ | √ |
| 75 | 91 | N□508075 | √ | √ | √ | √ | √ | | | √ | √ | √ | √ |
| 90 | 109 | N□508090 | √ | √ | √ | √ | √ | | | √ | √ | √ | √ |
| 125 | 152 | N□508125 | √ | | √ | √ | | | | | | | |

## AL vs NI Curve (60μ, 125μ)

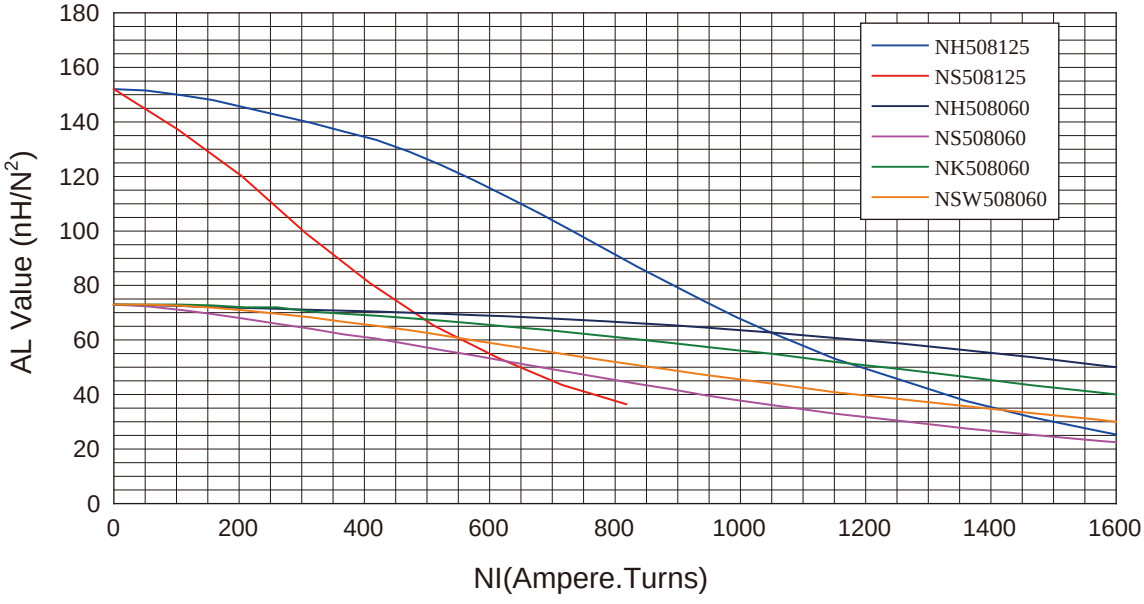

# 环型磁心
# Ring Core

## OD 571

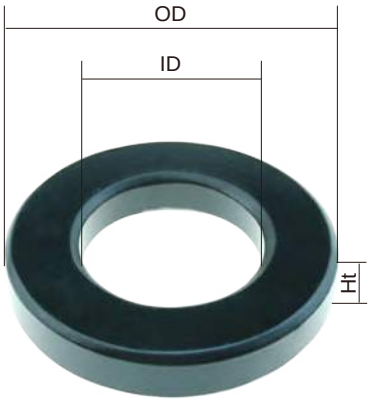


### 磁心尺寸 Core Dimensions

| | | OD(max) | ID(min) | Ht(max) |
|---|---|---|---|---|
| 涂覆前尺寸 | mm | 57.15 | 26.39 | 15.24 |
| Before Coating | inch | 2.250 | 1.039 | 0.600 |
| 涂覆后尺寸 | mm | 58.00 | 25.60 | 16.10 |
| After Coating | inch | 2.285 | 1.007 | 0.635 |

### 有效磁路参数 Effective Core Parameters

| 有效截面积 | 有效磁路长度 | 窗口面积 | 有效体积 |
|---|---|---|---|
| Cross Section | Path Length | Window Area | Volume |
| (Ae) | (le) | (Wa) | (Ve) |
| 2.290cm$^2$ | 12.500cm | 5.140cm$^2$ | 28.600mm$^3$ |
| 0.355in$^2$ | 4.930in | 1,014,049cmil | 1.750in$^3$ |

### 磁粉心常用规格 Available Cores

| 磁导率 Permeability (μ) | 电感因数 AL (nH/N$^2$) | 型号 Type | NS | NK | NH | NHU | NKS | NSW | NSWL | NHS | NSH | NHK | NKH |
|---|---|---|---|---|---|---|---|---|---|---|---|---|---|
| 26 | 60 | N□571026 | √ | √ | √ | √ | √ | √ | √ | √ | √ | √ | √ |
| 60 | 138 | N□571060 | √ | √ | √ | √ | √ | √ | √ | √ | √ | √ | √ |
| 75 | 172 | N□571075 | √ | √ | √ | √ | √ | | | √ | √ | √ | √ |
| 90 | 206 | N□571090 | √ | √ | √ | √ | √ | | | √ | √ | √ | √ |
| 125 | 287 | N□571125 | √ | | √ | √ | | | | | | | |

## AL vs NI Curve (60μ, 125μ)

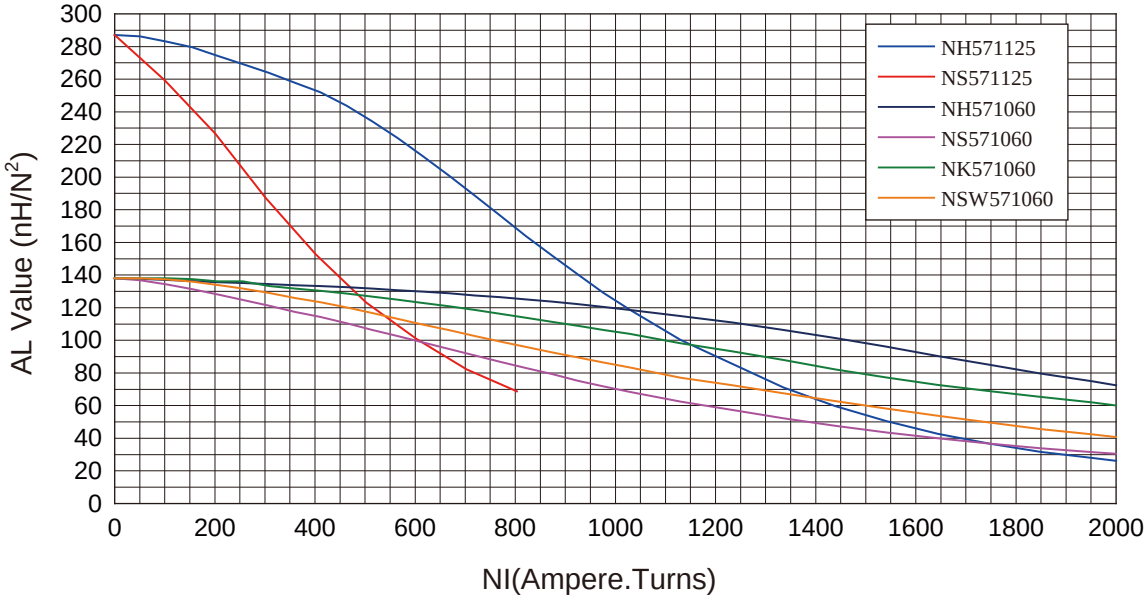

# 环型磁心
# Ring Core

## OD 572

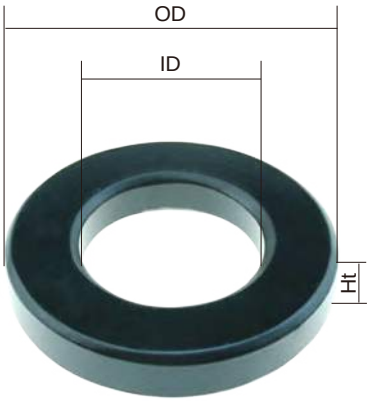


### 磁心尺寸 Core Dimensions

| | | OD(max) | ID(min) | Ht(max) |
|---|---|---|---|---|
| 涂覆前尺寸 | mm | 57.15 | 35.56 | 13.97 |
| Before Coating | inch | 2.250 | 1.400 | 0.550 |
| 涂覆后尺寸 | mm | 58.00 | 34.70 | 14.86 |
| After Coating | inch | 2.285 | 1.368 | 0.585 |

### 有效磁路参数 Effective Core Parameters

| 有效截面积 | 有效磁路长度 | 窗口面积 | 有效体积 |
|---|---|---|---|
| Cross Section | Path Length | Window Area | Volume |
| (Ae) | (le) | (Wa) | (Ve) |
| 1.444cm$^2$ | 14.300cm | 9.480cm$^2$ | 20.650mm$^3$ |
| 0.244in$^2$ | 5.630in | 1,871,000cmil | 1.261in$^3$ |

### 磁粉心常用规格 Available Cores

| 磁导率 Permeability (μ) | 电感因数 AL (nH/N$^2$) | 型号 Type | NS | NK | NH | NHU | NKS | NSW | NSWL | NHS | NSH | NHK | NKH |
|---|---|---|---|---|---|---|---|---|---|---|---|---|---|
| 26 | 33 | N□572026 | √ | √ | √ | √ | √ | √ | √ | √ | √ | √ | √ |
| 60 | 75 | N□572060 | √ | √ | √ | √ | √ | √ | √ | √ | √ | √ | √ |
| 75 | 94 | N□572075 | √ | √ | √ | √ | √ | | | √ | √ | √ | √ |
| 90 | 112 | N□572090 | √ | √ | √ | √ | √ | | | √ | √ | √ | √ |
| 125 | 156 | N□572125 | √ | | √ | √ | | | | | | | |

## AL vs NI Curve (60μ, 125μ)

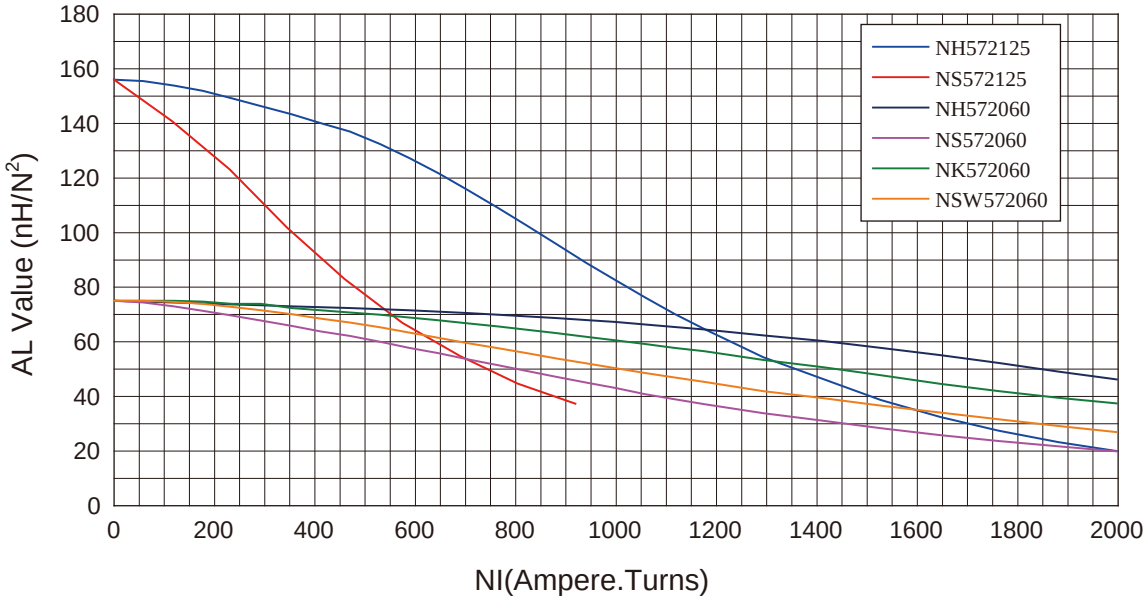

# 环型磁心
# Ring Core

## OD 610

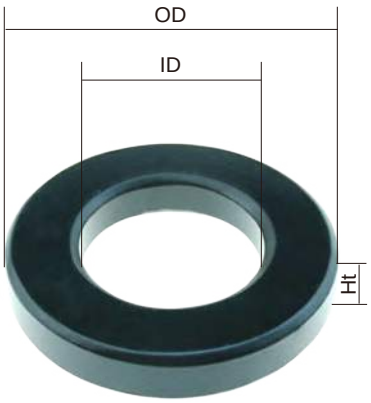


### 磁心尺寸 Core Dimensions

| | | OD(max) | ID(min) | Ht(max) |
|---|---|---|---|---|
| 涂覆前尺寸 | mm | 62.0 | 32.6 | 25.00 |
| Before Coating | inch | 2.441 | 1.283 | 0.984 |
| 涂覆后尺寸 | mm | 63.10 | 31.37 | 26.27 |
| After Coating | inch | 2.484 | 1.235 | 1.034 |

### 有效磁路参数 Effective Core Parameters

| 有效截面积 | 有效磁路长度 | 窗口面积 | 有效体积 |
|---|---|---|---|
| Cross Section | Path Length | Window Area | Volume |
| (Ae) | (le) | (Wa) | (Ve) |
| 3.675cm$^2$ | 14.370cm | 7.730cm$^2$ | 52.810mm$^3$ |
| 0.570in$^2$ | 5.660in | 1,525,610cmil | 3.223in$^3$ |

### 磁粉心常用规格 Available Cores

| 磁导率 Permeability (μ) | 电感因数 AL (nH/N$^2$) | 型号 Type | NS | NK | NH | NHU | NKS | NSW | NSWL | NHS | NSH | NHK | NKH |
|---|---|---|---|---|---|---|---|---|---|---|---|---|---|
| 26 | 83 | N□610026 | √ | √ | √ | √ | √ | √ | √ | √ | √ | √ | √ |
| 60 | 192 | N□610060 | √ | √ | √ | √ | √ | √ | √ | √ | √ | √ | √ |
| 75 | 240 | N□610075 | √ | √ | √ | √ | √ | | | √ | √ | √ | √ |
| 90 | 288 | N□610090 | √ | √ | √ | √ | √ | | | √ | √ | √ | √ |
| 125 | 400 | N□610125 | √ | | √ | √ | | | | | | | |

## AL vs NI Curve (60μ, 125μ)

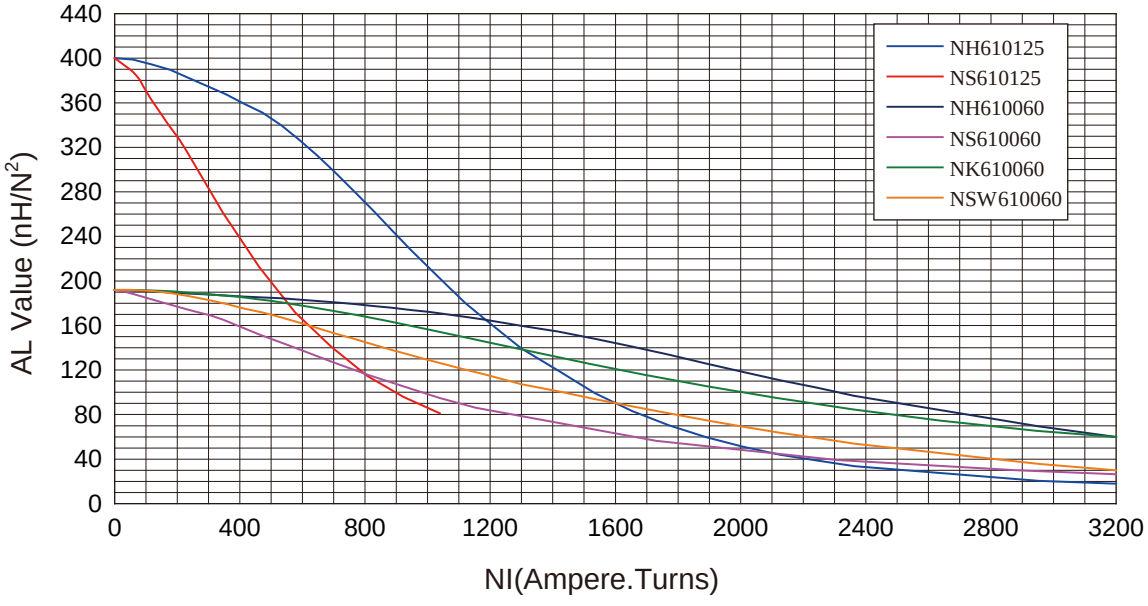

# 环型磁心
# Ring Core

## OD 680

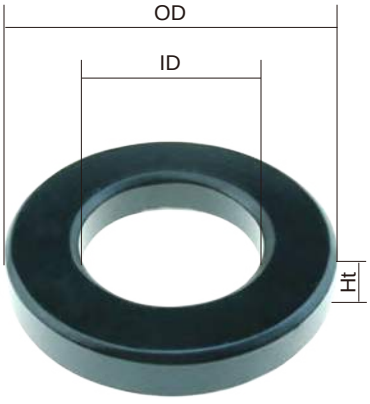


### 磁心尺寸 Core Dimensions

| | | OD(max) | ID(min) | Ht(max) |
|---|---|---|---|---|
| 涂覆前尺寸 | mm | 68.80 | 36.00 | 20.00 |
| Before Coating | inch | 2.677 | 1.417 | 0.787 |
| 涂覆后尺寸 | mm | 69.40 | 34.70 | 21.40 |
| After Coating | inch | 2.732 | 1.366 | 0.843 |

### 有效磁路参数 Effective Core Parameters

| 有效截面积 Cross Section (Ae) | 有效磁路长度 Path Length (le) | 窗口面积 Window Area (Wa) | 有效体积 Volume (Ve) |
|---|---|---|---|
| 3.104cm$^2$ | 16.330cm | 9.620cm$^2$ | 50.690mm$^3$ |
| 0.481in$^2$ | 6.429in | 1,898,332cmil | 3.093in$^3$ |

### 磁粉心常用规格 Available Cores

| 磁导率 Permeability (μ) | 电感因数 AL (nH/N$^2$) | 型号 Type | NS | NK | NH | NHU | NKS | NSW | NSWL | NHS | NSH | NHK | NKH |
|---|---|---|---|---|---|---|---|---|---|---|---|---|---|
| 26 | 62 | N□680026 | √ | √ | √ | √ | √ | √ | √ | √ | √ | √ | √ |
| 60 | 143 | N□680060 | √ | √ | √ | √ | √ | √ | √ | √ | √ | √ | √ |
| 75 | 179 | N□680075 | √ | √ | √ | √ | √ | | | √ | √ | √ | √ |
| 90 | 215 | N□680090 | √ | √ | √ | √ | √ | | | √ | √ | √ | √ |
| 125 | 298 | N□680125 | √ | | √ | √ | | | | | | | |

## AL vs NI Curve (60μ, 125μ)

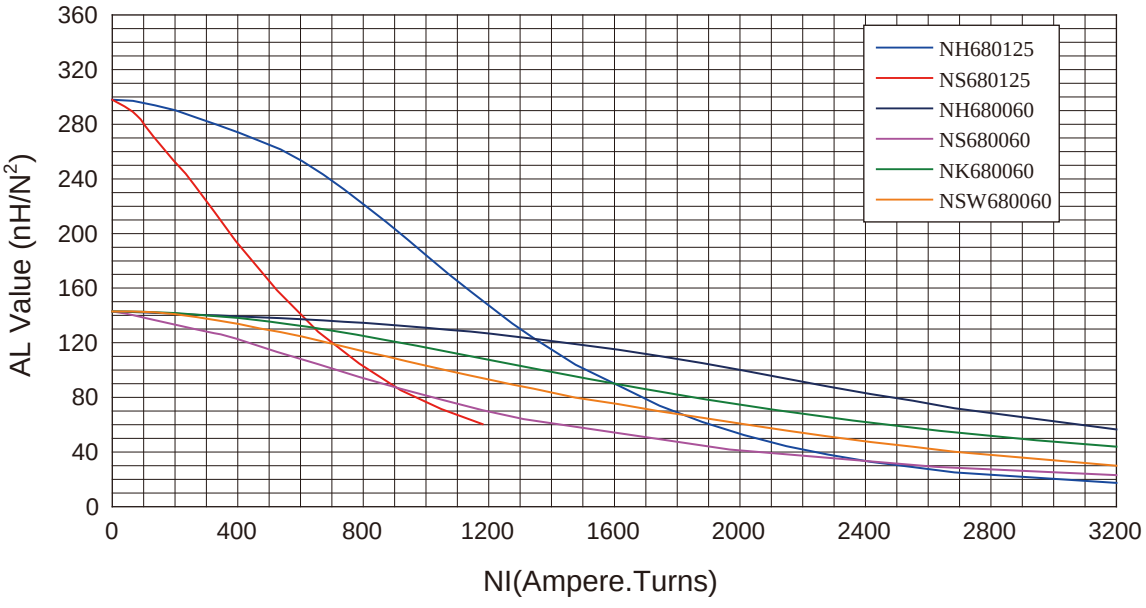

# 环型磁心
# Ring Core

## OD 740

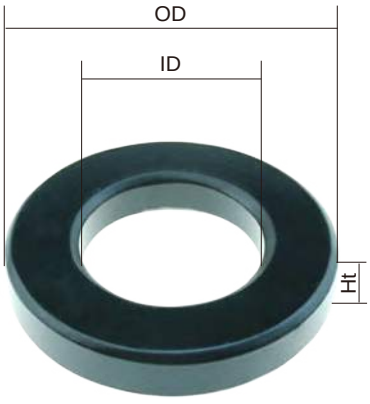


### 磁心尺寸 Core Dimensions

| | | OD(max) | ID(min) | Ht(max) |
|---|---|---|---|---|
| 涂覆前尺寸 | mm | 74.10 | 45.30 | 35.00 |
| Before Coating | inch | 2.917 | 1.783 | 1.378 |
| 涂覆后尺寸 | mm | 75.20 | 44.07 | 36.27 |
| After Coating | inch | 2.961 | 1.735 | 1.428 |

### 有效磁路参数 Effective Core Parameters

| 有效截面积 | 有效磁路长度 | 窗口面积 | 有效体积 |
|---|---|---|---|
| Cross Section | Path Length | Window Area | Volume |
| (Ae) | (le) | (Wa) | (Ve) |
| 5.040cm$^2$ | 18.380cm | 15.250cm$^2$ | 92.640mm$^3$ |
| 0.781in$^2$ | 7.240in | 3,009,310cmil | 5.653in$^3$ |

### 磁粉心常用规格 Available Cores

| 磁导率 Permeability (μ) | 电感因数 AL (nH/N$^2$) | 型号 Type | NS | NK | NH | NHU | NKS | NSW | NSWL | NHS | NSH | NHK | NKH |
|---|---|---|---|---|---|---|---|---|---|---|---|---|---|
| 26 | 89 | N□740026 | √ | √ | √ | √ | √ | √ | √ | √ | √ | √ | √ |
| 60 | 206 | N□740060 | √ | √ | √ | √ | √ | √ | √ | √ | √ | √ | √ |
| 75 | 257 | N□740075 | √ | √ | √ | √ | √ | | | √ | √ | √ | √ |
| 90 | 309 | N□740090 | √ | √ | √ | √ | √ | | | √ | √ | √ | √ |
| 125 | 429 | N□740125 | √ | | √ | √ | | | | | | | |

## AL vs NI Curve (60μ, 125μ)

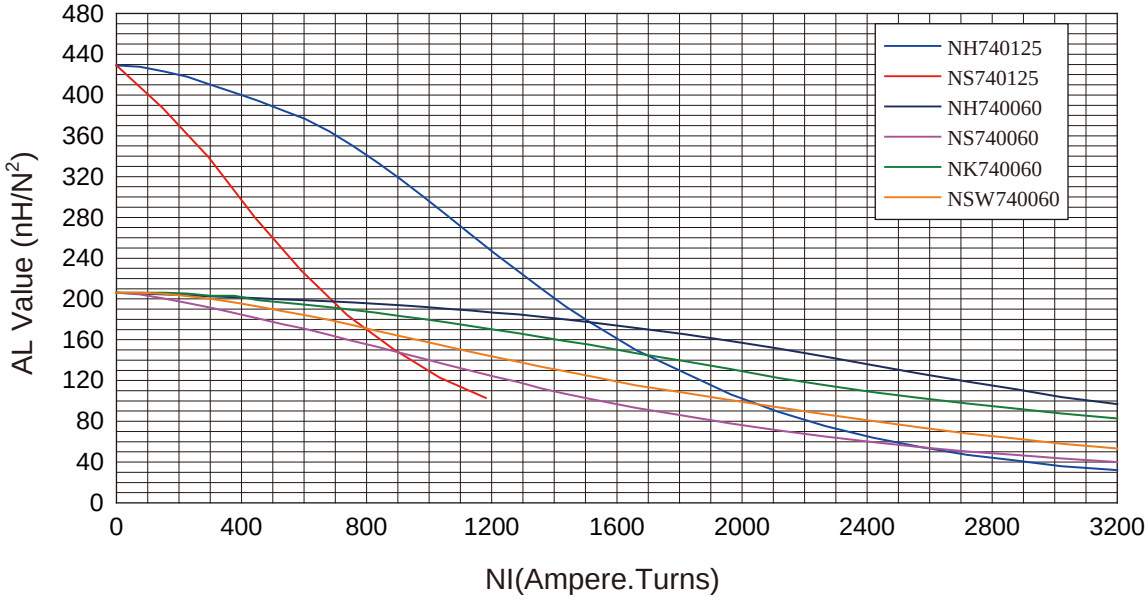

# 环型磁心
# Ring Core

## OD 777

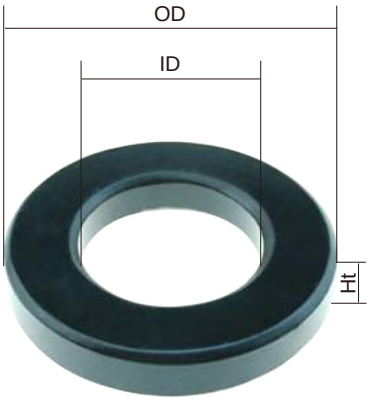


### 磁心尺寸 Core Dimensions

| | | OD(max) | ID(min) | Ht(max) |
|---|---|---|---|---|
| 涂覆前尺寸 | mm | 77.80 | 49.23 | 12.70 |
| Before Coating | inch | 3.063 | 1.938 | 0.500 |
| 涂覆后尺寸 | mm | 78.90 | 48.00 | 13.97 |
| After Coating | inch | 3.108 | 1.888 | 0.550 |

### 有效磁路参数 Effective Core Parameters

| 有效截面积 | 有效磁路长度 | 窗口面积 | 有效体积 |
|---|---|---|---|
| Cross Section | Path Length | Window Area | Volume |
| (Ae) | (le) | (Wa) | (Ve) |
| 1.770cm$^2$ | 20.000cm | 17.990cm$^2$ | 34.770mm$^3$ |
| 0.274in$^2$ | 7.720in | 3,550,000cmil | 2.122in$^3$ |

### 磁粉心常用规格 Available Cores

| 磁导率 Permeability (μ) | 电感因数 AL (nH/N$^2$) | 型号 Type | NS | NK | NH | NHU | NKS | NSW | NSWL | NHS | NSH | NHK | NKH |
|---|---|---|---|---|---|---|---|---|---|---|---|---|---|
| 26 | 30 | N□777026 | √ | √ | √ | √ | √ | √ | √ | √ | √ | √ | √ |
| 60 | 68 | N□777060 | √ | √ | √ | √ | √ | √ | √ | √ | √ | √ | √ |
| 75 | 85 | N□777075 | √ | √ | √ | √ | √ | | | √ | √ | √ | √ |
| 90 | 102 | N□777090 | √ | √ | √ | √ | √ | | | √ | √ | √ | √ |
| 125 | 142 | N□777125 | √ | | √ | √ | | | | | | | |

## AL vs NI Curve (60μ, 125μ)

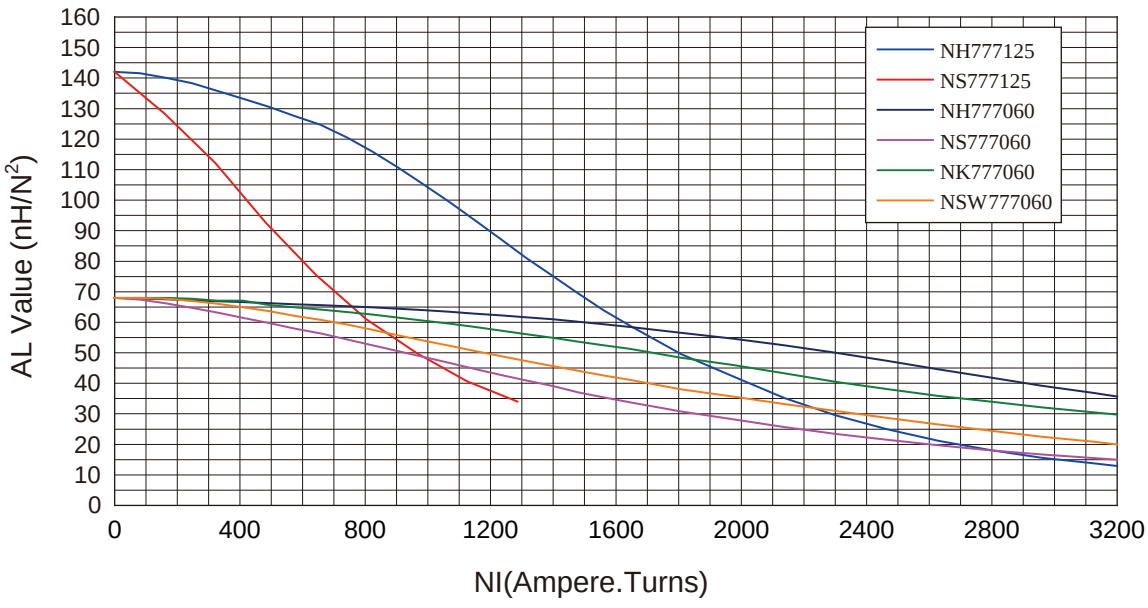

# 环型磁心
# Ring Core

## OD 778

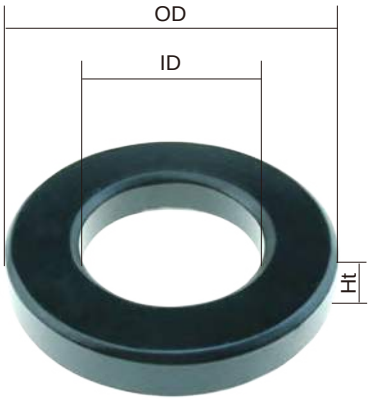


### 磁心尺寸 Core Dimensions

| | | OD(max) | ID(min) | Ht(max) |
|---|---|---|---|---|
| 涂覆前尺寸 | mm | 77.80 | 49.23 | 15.90 |
| Before Coating | inch | 3.063 | 1.938 | 0.626 |
| 涂覆后尺寸 | mm | 78.90 | 48.00 | 17.20 |
| After Coating | inch | 3.108 | 1.888 | 0.677 |

### 有效磁路参数 Effective Core Parameters

| 有效截面积 | 有效磁路长度 | 窗口面积 | 有效体积 |
|---|---|---|---|
| Cross Section | Path Length | Window Area | Volume |
| (Ae) | (le) | (Wa) | (Ve) |
| 2.270cm$^2$ | 20.000cm | 17.990cm$^2$ | 43.531mm$^3$ |
| 0.352in$^2$ | 7.720in | 3,550,000cmil | 2.656in$^3$ |

### 磁粉心常用规格 Available Cores

| 磁导率 Permeability (μ) | 电感因数 AL (nH/N$^2$) | 型号 Type | NS | NK | NH | NHU | NKS | NSW | NSWL | NHS | NSH | NHK | NKH |
|---|---|---|---|---|---|---|---|---|---|---|---|---|---|
| 26 | 37 | N□778026 | √ | √ | √ | √ | √ | √ | √ | √ | √ | √ | √ |
| 60 | 85 | N□778060 | √ | √ | √ | √ | √ | √ | √ | √ | √ | √ | √ |
| 75 | 107 | N□778075 | √ | √ | √ | √ | √ | | | √ | √ | √ | √ |
| 90 | 128 | N□778090 | √ | √ | √ | √ | √ | | | √ | √ | √ | √ |
| 125 | 178 | N□778125 | √ | | √ | √ | | | | | | | |

## AL vs NI Curve (60μ, 125μ)

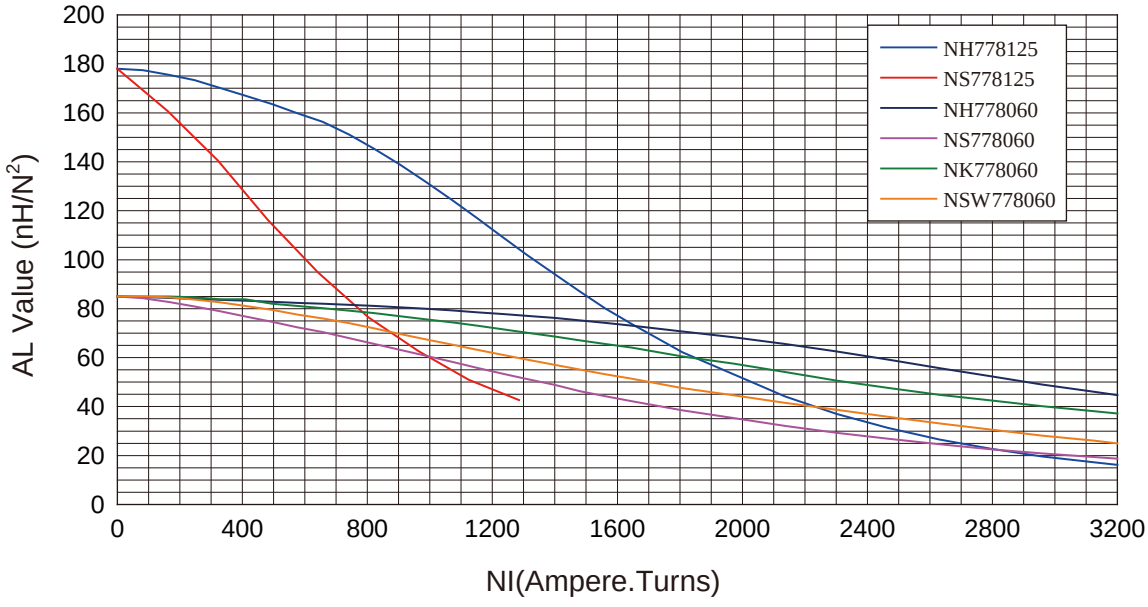

# 环型磁心
# Ring Core

## OD 1020E13.6

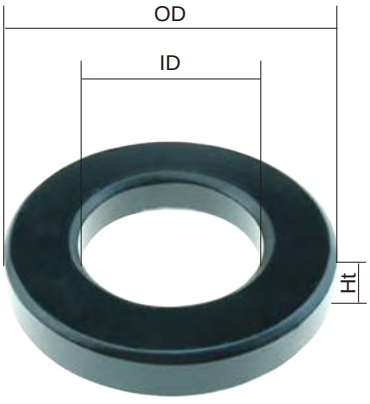


### 磁心尺寸 Core Dimensions

| | | OD(max) | ID(min) | Ht(max) |
|---|---|---|---|---|
| 涂覆前尺寸 | mm | 101.60 | 57.15 | 13.59 |
| Before Coating | inch | 4.000 | 2.250 | 0.535 |
| 涂覆后尺寸 | mm | 103.20 | 55.70 | 14.86 |
| After Coating | inch | 4.061 | 2.195 | 0.585 |

### 有效磁路参数 Effective Core Parameters

| 有效截面积 | 有效磁路长度 | 窗口面积 | 有效体积 |
|---|---|---|---|
| Cross Section | Path Length | Window Area | Volume |
| (Ae) | (le) | (Wa) | (Ve) |
| 2.972cm$^2$ | 24.271cm | 24.413cm$^2$ | 72.122mm$^3$ |
| 0.461in$^2$ | 9.556in | 4,818,025cmil | 4.401in$^3$ |

### 磁粉心常用规格 Available Cores

| 磁导率 Permeability (μ) | 电感因数 AL (nH/N$^2$) | 型号 Type | NS | NK | NH | NHU | NKS | NSW | NSWL | NHS | NSH | NHK | NKH |
|---|---|---|---|---|---|---|---|---|---|---|---|---|---|
| 26 | 40 | N□1020026E13.6 | √ | √ | √ | √ | √ | √ | √ | √ | √ | √ | √ |
| 60 | 92 | N□1020060E13.6 | √ | √ | √ | √ | √ | √ | √ | √ | √ | √ | √ |
| 75 | 115 | N□1020075E13.6 | √ | √ | √ | √ | √ | | | √ | √ | √ | √ |
| 90 | 139 | N□1020090E13.6 | √ | √ | √ | √ | √ | | | √ | √ | √ | √ |
| 125 | 192 | N□1020125E13.6 | √ | | √ | √ | | | | | | | |

## AL vs NI Curve (60μ, 125μ)

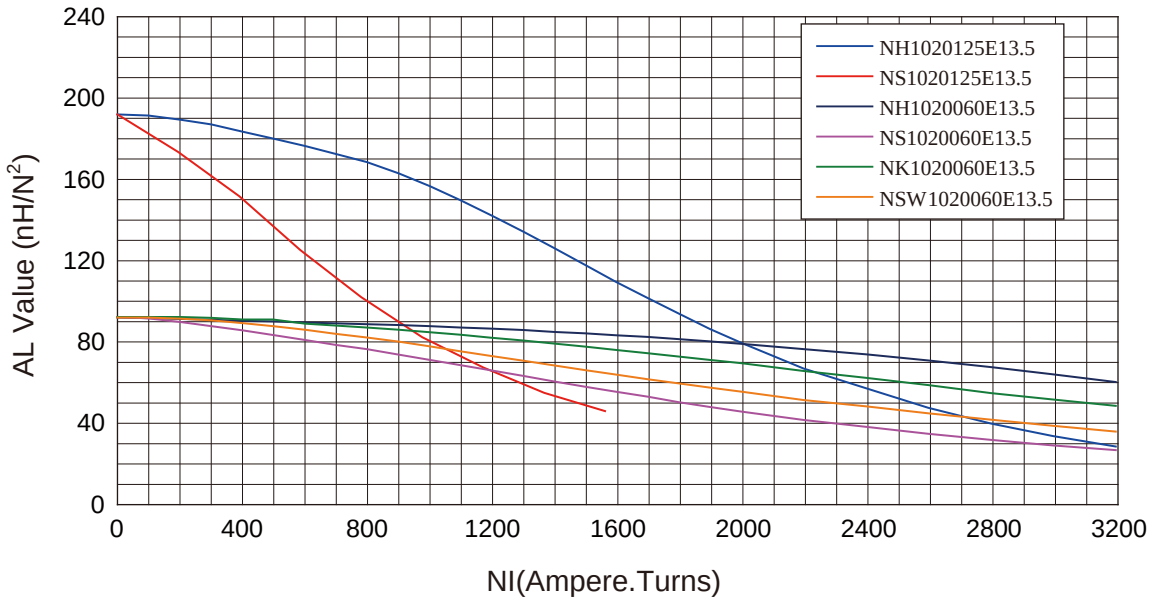

# 环型磁心
# Ring Core

## OD 1020E16.5

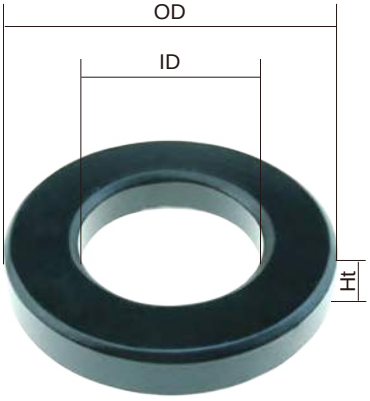


### 磁心尺寸 Core Dimensions

| | | OD(max) | ID(min) | Ht(max) |
|---|---|---|---|---|
| 涂覆前尺寸 | mm | 101.60 | 57.15 | 16.50 |
| Before Coating | inch | 4.000 | 2.252 | 0.650 |
| 涂覆后尺寸 | mm | 103.10 | 55.70 | 17.80 |
| After Coating | inch | 4.059 | 2.195 | 0.701 |

### 有效磁路参数 Effective Core Parameters

| 有效截面积 | 有效磁路长度 | 窗口面积 | 有效体积 |
|---|---|---|---|
| Cross Section | Path Length | Window Area | Volume |
| (Ae) | (le) | (Wa) | (Ve) |
| 3.523cm$^2$ | 24.271cm | 24.413cm$^2$ | 85.495mm$^3$ |
| 0.546in$^2$ | 9.560in | 4,807,425cmil | 5.217in$^3$ |

### 磁粉心常用规格 Available Cores

| 磁导率 Permeability (μ) | 电感因数 AL (nH/N$^2$) | 型号 Type | NS | NK | NH | NHU | NKS | NSW | NSWL | NHS | NSH | NHK | NKH |
|---|---|---|---|---|---|---|---|---|---|---|---|---|---|
| 26 | 48 | N□1020026E16.5 | √ | √ | √ | √ | √ | √ | √ | √ | √ | √ | √ |
| 60 | 112 | N□1020060E16.5 | √ | √ | √ | √ | √ | √ | √ | √ | √ | √ | √ |
| 75 | 137 | N□1020075E16.5 | √ | √ | √ | √ | √ | | | √ | √ | √ | √ |
| 90 | 164 | N□1020090E16.5 | √ | √ | √ | √ | √ | | | √ | √ | √ | √ |
| 125 | 228 | N□1020125E16.5 | √ | | √ | √ | | | | | | | |

## AL vs NI Curve (60μ, 125μ)

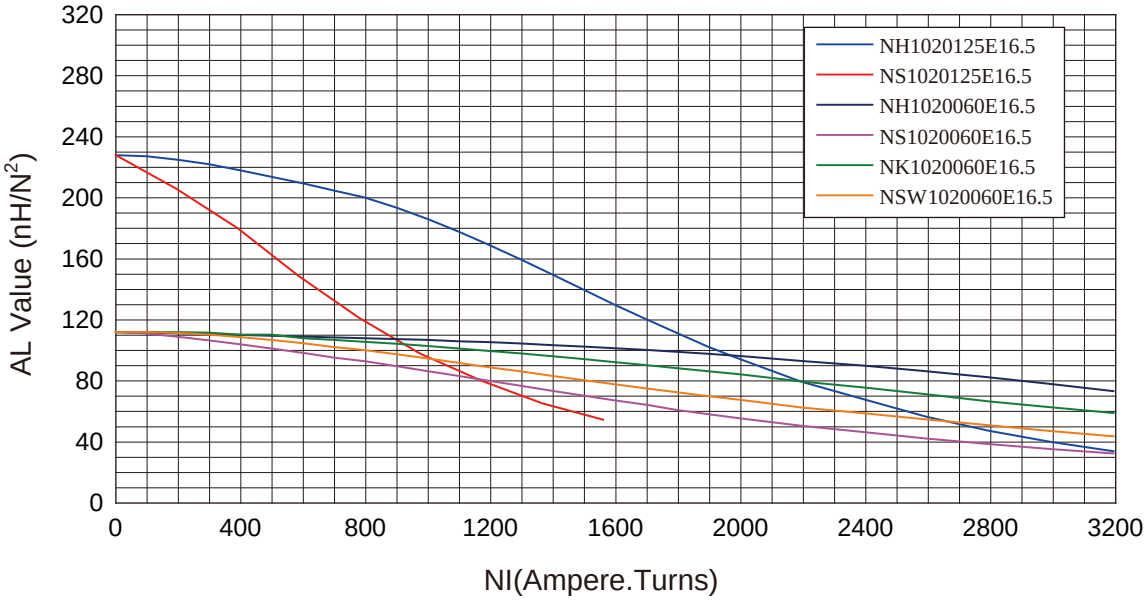

# 环形磁粉心型号对照表
# Cross Reference of Ring-Cores

| NCD | MAGNETICS | ARNOLD | CSC | KDM | POCO | AL (nH/N$^2$) | OD (mm) | IN (mm) | HT (mm) |
|---|---|---|---|---|---|---|---|---|---|
| NS078060 | 77031 | MS-031060 | CS078060 | KS031-060A | - | 25 | 7.87 | 3.96 | 3.18 |
| NS078075 | 77835 | MS-031075 | CS078075 | KS031-075A | - | 31 | 7.87 | 3.96 | 3.18 |
| NS078090 | 77834 | MS-031090 | CS078090 | KS031-090A | - | 37 | 7.87 | 3.96 | 3.18 |
| NS078125 | 77030 | MS-031125 | CS078125 | KS031-125A | - | 52 | 7.87 | 3.96 | 3.18 |
| NS102060 | 77041 | MS-040060 | CS102060 | KS040-060A | - | 32 | 10.2 | 5.08 | 3.96 |
| NS102075 | 77845 | MS-040075 | CS102075 | KS040-075A | - | 40 | 10.2 | 5.08 | 3.96 |
| NS102090 | 77844 | MS-040090 | CS102090 | KS040-090A | - | 48 | 10.2 | 5.08 | 3.96 |
| NS102125 | 77040 | MS-040125 | CS102125 | KS040-125A | - | 66 | 10.2 | 5.08 | 3.96 |
| NS127060 | 77051 | MS-050060 | CS127060 | KS050-060A | NPS050060 | 27 | 12.7 | 7.62 | 4.75 |
| NS127075 | 77055 | MS-050075 | CS127075 | KS050-075A | NPS050075 | 34 | 12.7 | 7.62 | 4.75 |
| NS127090 | 77054 | MS-050090 | CS127090 | KS050-090A | NPS050090 | 40 | 12.7 | 7.62 | 4.75 |
| NS127125 | 77050 | MS-050125 | CS127125 | KS050-125A | NPS050125 | 56 | 12.7 | 7.62 | 4.75 |
| NS166060 | 77121 | MS-065060 | CS166060 | KS065-060A | NPS065060 | 35 | 16.6 | 10.2 | 6.35 |
| NS166075 | 77225 | MS-065075 | CS166075 | KS065-075A | NPS065075 | 43 | 16.6 | 10.2 | 6.35 |
| NS166090 | 77224 | MS-065090 | CS166090 | KS065-090A | NPS065090 | 52 | 16.6 | 10.2 | 6.35 |
| NS166125 | 77120 | MS-065125 | CS166125 | KS065-125A | NPS065125 | 72 | 16.6 | 10.2 | 6.35 |
| NS172060 | 77381 | MS-068060 | CS172060 | KS068-060A | NPS068060 | 43 | 17.3 | 9.65 | 6.35 |
| NS172075 | 77385 | MS-068075 | CS172075 | KS068-075A | NPS068075 | 53 | 17.3 | 9.65 | 6.35 |
| NS172090 | 77384 | MS-068090 | CS172090 | KS068-090A | NPS068090 | 64 | 17.3 | 9.65 | 6.35 |
| NS172125 | 77380 | MS-068125 | CS172125 | KS068-125A | NPS068125 | 89 | 17.3 | 9.65 | 6.35 |
| NS203060 | 77848 | MS-080060 | CS203060 | KS080-060A | NPS080060 | 32 | 20.3 | 12.7 | 6.35 |
| NS203075 | 77211 | MS-080075 | CS203075 | KS080-075A | NPS080075 | 41 | 20.3 | 12.7 | 6.35 |
| NS203090 | 77210 | MS-080090 | CS203090 | KS080-090A | NPS080090 | 49 | 20.3 | 12.7 | 6.35 |
| NS203125 | 77206 | MS-080125 | CS203125 | KS080-125A | NPS080125 | 68 | 20.3 | 12.7 | 6.35 |
| NS229060 | 77059 | MS-090060 | CS229060 | KS090-060A | NPS090060 | 43 | 22.9 | 14 | 7.62 |
| NS229075 | 77315 | MS-090075 | CS229075 | KS090-075A | NPS090075 | 54 | 22.9 | 14 | 7.62 |
| NS229090 | 77314 | MS-090090 | CS229090 | KS090-090A | NPS090090 | 65 | 22.9 | 14 | 7.62 |
| NS229125 | 77310 | MS-090125 | CS229125 | KS090-125A | NPS090125 | 90 | 22.9 | 14 | 7.62 |
| NS234060 | 77351 | MS-092060 | CS234060 | KS092-060A | NPS092060 | 51 | 23.6 | 14.4 | 8.89 |
| NS234075 | 77355 | MS-092075 | CS234075 | KS092-075A | NPS092075 | 63 | 23.6 | 14.4 | 8.89 |
| NS234090 | 77354 | MS-092090 | CS234090 | KS092-090A | NPS092090 | 76 | 23.6 | 14.4 | 8.89 |
| NS234125 | 77350 | MS-092125 | CS234125 | KS092-125A | NPS092125 | 105 | 23.6 | 14.4 | 8.89 |
| NS270026 | 77932 | MS-106026 | CS270026 | KS106-026A | NPS106026 | 32 | 26.9 | 14.7 | 11.2 |
| NS270060 | 77894 | MS-106060 | CS270060 | KS106-060A | NPS106060 | 75 | 26.9 | 14.7 | 11.2 |
| NS270075 | 77935 | MS-106075 | CS270075 | KS106-075A | NPS106075 | 94 | 26.9 | 14.7 | 11.2 |
| NS270090 | 77934 | MS-106090 | CS270090 | KS106-090A | NPS106090 | 113 | 26.9 | 14.7 | 11.2 |
| NS270125 | 77930 | MS-106125 | CS270125 | KS106-125A | NPS106125 | 157 | 26.9 | 14.7 | 11.2 |
| NS330026 | 77550 | MS-130026 | CS330026 | KS130-026A | NPS130026 | 28 | 33 | 19.9 | 10.7 |
| NS330060 | 77071 | MS-130060 | CS330060 | KS130-060A | NPS130060 | 61 | 33 | 19.9 | 10.7 |
| NS330075 | 77553 | MS-130075 | CS330075 | KS130-075A | NPS130075 | 76 | 33 | 19.9 | 10.7 |
| NS330090 | 77552 | MS-130090 | CS330090 | KS130-090A | NPS130090 | 91 | 33 | 19.9 | 10.7 |
| NS330125 | 77548 | MS-130125 | CS330125 | KS130-125A | NPS130125 | 127 | 33 | 19.9 | 10.7 |

# 环形磁粉心型号对照表
# Cross Reference of Ring-Cores

| NCD | MAGNETICS | ARNOLD | CSC | KDM | POCO | AL (nH/N$^2$) | OD (mm) | IN (mm) | HT (mm) |
|---|---|---|---|---|---|---|---|---|---|
| NS343026 | 77587 | MS-135026 | CS343026 | KS135-026A | NPS135026 | 16 | 34.3 | 23.37 | 8.89 |
| NS343060 | 77586 | MS-135060 | CS343060 | KS135-060A | NPS135060 | 38 | 34.3 | 23.37 | 8.89 |
| NS343075 | 77590 | MS-135075 | CS343075 | KS135-075A | NPS135075 | 47 | 34.3 | 23.37 | 8.89 |
| NS343090 | 77589 | MS-135090 | CS343090 | KS135-090A | NPS135090 | 57 | 34.3 | 23.37 | 8.89 |
| NS343125 | 77585 | MS-135125 | CS343125 | KS135-125A | NPS135125 | 79 | 34.3 | 23.37 | 8.89 |
| NS358026 | 77326 | MS-141026 | CS358026 | KS141-026A | NPS141026 | 24 | 35.8 | 22.4 | 10.5 |
| NS358060 | 77076 | MS-141060 | CS358060 | KS141-060A | NPS141060 | 56 | 35.8 | 22.4 | 10.5 |
| NS358075 | 77329 | MS-141075 | CS358075 | KS141-075A | NPS141075 | 70 | 35.8 | 22.4 | 10.5 |
| NS358090 | 77328 | MS-141090 | CS358090 | KS141-090A | NPS141090 | 84 | 35.8 | 22.4 | 10.5 |
| NS358125 | 77324 | MS-141125 | CS358125 | KS141-125A | NPS141125 | 117 | 35.8 | 22.4 | 10.5 |
| NS378026 | - | - | - | - | - | 39 | 37.9 | 22.9 | 15.0 |
| NS378060 | - | - | - | - | - | 90 | 37.9 | 22.9 | 15.0 |
| NS378075 | - | - | - | - | - | 113 | 37.9 | 22.9 | 15.0 |
| NS378090 | - | - | - | - | - | 135 | 37.9 | 22.9 | 15.0 |
| NS378125 | - | - | - | - | - | 187 | 37.9 | 22.9 | 15.0 |
| NS400026 | 77256 | MS-157026 | CS400026 | KS157-026A | NPS157026 | 35 | 39.9 | 24.1 | 14.5 |
| NS400060 | 77083 | MS-157060 | CS400060 | KS157-060A | NPS157060 | 81 | 39.9 | 24.1 | 14.5 |
| NS400075 | 77259 | MS-157075 | CS400075 | KS157-075A | NPS157075 | 101 | 39.9 | 24.1 | 14.5 |
| NS400090 | 77258 | MS-157090 | CS400090 | KS157-090A | NPS157090 | 121 | 39.9 | 24.1 | 14.5 |
| NS400125 | 77254 | MS-157125 | CS400125 | KS157-125A | NPS157125 | 168 | 39.9 | 24.1 | 14.5 |
| NS401026 | - | - | - | - | NPS158026 | 53 | 40.13 | 22.08 | 17.0 |
| NS401060 | - | - | - | - | NPS158060 | 119 | 40.13 | 22.08 | 17.0 |
| NS401075 | - | - | - | - | NPS158075 | 153 | 40.13 | 22.08 | 17.0 |
| NS401090 | - | - | - | - | NPS158090 | 183 | 40.13 | 22.08 | 17.0 |
| NS401125 | - | - | - | - | NPS158125 | 254 | 40.13 | 22.08 | 17.0 |
| NS467026 | 77440 | MS-184026 | CS467026 | KS184-026A | NPS184026 | 59 | 46.7 | 24.1 | 18 |
| NS467060 | 77439 | MS-184060 | CS467060 | KS184-060A | NPS184060 | 135 | 46.7 | 24.1 | 18 |
| NS467075 | 77443 | MS-184075 | CS467075 | KS184-075A | NPS184075 | 169 | 46.7 | 24.1 | 18 |
| NS467090 | 77442 | MS-184090 | CS467090 | KS184-090A | NPS184090 | 202 | 46.7 | 24.1 | 18 |
| NS467125 | 77438 | MS-184125 | CS467125 | KS184-125A | NPS184125 | 281 | 46.7 | 24.1 | 18 |
| NS468026 | 77091 | MS-185026 | CS468026 | KS185-026A | NPS185026 | 37 | 46.7 | 28.7 | 15.2 |
| NS468060 | 77090 | MS-185060 | CS468060 | KS185-060A | NPS185060 | 86 | 46.7 | 28.7 | 15.2 |
| NS468075 | 77094 | MS-185075 | CS468075 | KS185-075A | NPS185075 | 107 | 46.7 | 28.7 | 15.2 |
| NS468090 | 77093 | MS-185090 | CS468090 | KS185-090A | NPS185090 | 128 | 46.7 | 28.7 | 15.2 |
| NS468125 | 77089 | MS-185125 | CS468125 | KS185-125A | NPS185125 | 178 | 46.7 | 28.7 | 15.2 |
| NS508026 | 77717 | MS-200026 | CS508026 | KS200-026A | NPS200026 | 32 | 50.8 | 31.8 | 13.5 |
| NS508060 | 77716 | MS-200060 | CS508060 | KS200-060A | NPS200060 | 73 | 50.8 | 31.8 | 13.5 |
| NS508075 | 77720 | MS-200075 | CS508075 | KS200-075A | NPS200075 | 91 | 50.8 | 31.8 | 13.5 |
| NS508090 | 77719 | MS-200090 | CS508090 | KS200-090A | NPS200090 | 109 | 50.8 | 31.8 | 13.5 |
| NS508125 | 77715 | MS-200125 | CS508125 | KS200-125A | NPS200125 | 152 | 50.8 | 31.8 | 13.5 |
| NS571026 | 77191 | MS-226026 | CS571026 | KS226-026A | NPS226026 | 60 | 57.2 | 26.4 | 15.2 |
| NS571060 | 77192 | MS-226060 | CS571060 | KS226-060A | NPS226060 | 138 | 57.2 | 26.4 | 15.2 |

# 环形磁粉心型号对照表
# Cross Reference of Ring-Cores

| NCD | MAGNETICS | ARNOLD | CSC | KDM | POCO | AL (nH/N$^2$) | OD (mm) | IN (mm) | HT (mm) |
|---|---|---|---|---|---|---|---|---|---|
| NS571075 | 77193 | MS-226075 | CS571075 | KS226-075A | NPS226075 | 172 | 57.2 | 26.4 | 15.2 |
| NS571090 | 77194 | MS-226090 | CS571090 | KS226-090A | NPS226090 | 206 | 57.2 | 26.4 | 15.2 |
| NS571125 | 77195 | MS-226125 | CS571125 | KS226-125A | NPS226125 | 287 | 57.2 | 26.4 | 15.2 |
| NS572026 | 77111 | MS-225026 | CS572026 | KS225-026A | NPS225026 | 33 | 57.2 | 35.6 | 14 |
| NS572060 | 77110 | MS-225060 | CS572060 | KS225-060A | NPS225060 | 75 | 57.2 | 35.6 | 14 |
| NS572075 | 77214 | MS-225075 | CS572075 | KS225-075A | NPS225075 | 94 | 57.2 | 35.6 | 14 |
| NS572090 | 77213 | MS-225090 | CS572090 | KS225-090A | NPS225090 | 112 | 57.2 | 35.6 | 14 |
| NS572125 | 77109 | MS-225125 | CS572125 | KS225-125A | NPS225125 | 156 | 57.2 | 35.6 | 14 |
| NS610026 | 77615 | - | CS610026 | KS250-026A | NPS250026 | 83 | 62.0 | 32.6 | 25 |
| NS610060 | 77617 | - | CS610060 | KS250-060A | NPS250060 | 192 | 62.0 | 32.6 | 25 |
| NS610075 | - | - | CS610075 | - | - | 240 | 62.0 | 32.6 | 25 |
| NS610090 | 77619 | - | CS610090 | KS250-090A | NPS250090 | 288 | 62.0 | 32.6 | 25 |
| NS610125 | 77620 | - | CS610125 | KS250-125A | NPS250125 | 400 | 62.0 | 32.6 | 25 |
| NS680026 | 77074 | - | - | KS268-026A | - | 62 | 68.8 | 36 | 20 |
| NS680060 | 77072 | - | - | KS268-060A | - | 143 | 68.8 | 36 | 20 |
| NS680075 | 77069 | - | - | KS268-075A | - | 179 | 68.8 | 36 | 20 |
| NS680090 | 77068 | - | - | KS268-090A | - | 215 | 68.0 | 36 | 20 |
| NS680125 | 77070 | - | - | KS268-125A | - | 298 | 68.8 | 36 | 20 |
| NS740026 | 77735 | - | CS740026 | KS290-026A | - | 89 | 74.1 | 45.3 | 35 |
| NS740060 | 77737 | - | CS740060 | KS290-060A | - | 206 | 74.1 | 45.3 | 35 |
| NS740075 | 77738 | - | CS740075 | KS290-075A | - | 257 | 74.1 | 45.3 | 35 |
| NS740090 | 77739 | - | CS740090 | KS290-090A | - | 309 | 74.1 | 45.3 | 35 |
| NS740125 | 77740 | - | CS740125 | KS290-125A | - | 429 | 74.1 | 45.3 | 35 |
| NS777026 | 77868 | MS-330026 | CS777026 | KS300-026A | NPS300026 | 30 | 77.8 | 49.2 | 12.7 |
| NS777060 | 77867 | MS-300060 | CS777060 | KS300-060A | NPS300060 | 68 | 77.8 | 49.2 | 12.7 |
| NS777090 | - | MS-300090 | CS777090 | KS300-090A | NPS300090 | 102 | 77.8 | 49.2 | 12.7 |
| NS777125 | 77866 | MS-300125 | CS777125 | KS300-125A | NPS300125 | 142 | 77.8 | 49.2 | 12.7 |
| NS778026 | 77908 | MS-301026 | CS778026 | KS301-026A | NPS306026 | 37 | 77.8 | 49.2 | 15.9 |
| NS778060 | 77907 | MS-301060 | CS778060 | KS301-026A | NPS306060 | 85 | 77.8 | 49.2 | 15.9 |
| NS778090 | | MS-301090 | CS778090 | KS301-026A | NPS306090 | 128 | 77.8 | 49.2 | 15.9 |
| NS778125 | 77906 | MS-301125 | CS778125 | KS301-026A | NPS306125 | 178 | 77.8 | 49.2 | 15.9 |
| NS1020026E13.6 | - | MS-401026 | - | KS401-026A | NPS400026 | 40 | 101.6 | 57.15 | 13.6 |
| NS1020060E13.6 | - | MS-401060 | - | KS401-060A | NPS400060 | 92.3 | 101.6 | 57.15 | 13.6 |
| NS1020125E13.6 | - | MS-401125 | - | KS401-125A | NPS400125 | 192 | 101.6 | 57.15 | 13.6 |
| NS1020026E16.5 | 77102 | MS-400026 | CS1016026 | KS400-026A | NPS401026 | 48 | 101.6 | 57.15 | 16.5 |
| NS1020060E16.5 | 77099 | MS-400060 | CS1016060 | KS400-060A | NPS401060 | 112 | 101.6 | 57.15 | 16.5 |
| NS1020125E16.5 | 77098 | MS-400125 | CS1016125 | KS400-125A | NPS401125 | 228 | 101.6 | 57.15 | 16.5 |

# 环形磁粉心型号对照表
# Cross Reference of Ring-Cores

| NCD | MAGNETICS | ARNOLD | CSC | KDM | POCO | AL (nH/N$^2$) | OD (mm) | IN (mm) | HT (mm) |
|---|---|---|---|---|---|---|---|---|---|
| NK078060 | - | FS-031060 | CK078060 | KSF031-060A | - | 25 | 7.87 | 3.96 | 3.18 |
| NK078075 | - | FS-031075 | CK078075 | KSF031-075A | - | 31 | 7.87 | 3.96 | 3.18 |
| NK078090 | - | FS-031090 | CK078090 | KSF031-090A | - | 37 | 7.87 | 3.96 | 3.18 |
| NK102060 | - | FS-040060 | CK102060 | KSF040-060A | - | 32 | 10.2 | 5.08 | 3.96 |
| NK102075 | - | FS-040075 | CK102075 | KSF040-075A | - | 40 | 10.2 | 5.08 | 3.96 |
| NK102090 | - | FS-040090 | CK102090 | KSF040-090A | - | 48 | 10.2 | 5.08 | 3.96 |
| NK127060 | 78051 | FS-050060 | CK127060 | KSF050-060A | NPF050060 | 27 | 12.7 | 7.62 | 4.75 |
| NK127075 | 78055 | FS-050075 | CK127075 | KSF050-075A | NPF050075 | 34 | 12.7 | 7.62 | 4.75 |
| NK127090 | 78054 | FS-050090 | CK127090 | KSF050-090A | NPF050090 | 40 | 12.7 | 7.62 | 4.75 |
| NK166060 | 78121 | FS-065060 | CK166060 | KSF065-060A | NPF065060 | 35 | 16.6 | 10.2 | 6.35 |
| NK166075 | 78225 | FS-065075 | CK166075 | KSF065-075A | NPF065075 | 43 | 16.6 | 10.2 | 6.35 |
| NK166090 | 78224 | FS-065090 | CK166090 | KSF065-090A | NPF065090 | 52 | 16.6 | 10.2 | 6.35 |
| NK172060 | 78381 | FS-068060 | CK172060 | KSF068-060A | NPF068060 | 43 | 17.3 | 9.65 | 6.35 |
| NK172075 | 78385 | FS-068075 | CK172075 | KSF068-075A | NPF068075 | 53 | 17.3 | 9.65 | 6.35 |
| NK172090 | 78384 | FS-068090 | CK172090 | KSF068-090A | NPF068090 | 64 | 17.3 | 9.65 | 6.35 |
| NK203060 | 78848 | FS-080060 | CK203060 | KSF080-060A | NPF080060 | 32 | 20.3 | 12.7 | 6.35 |
| NK203075 | 78211 | FS-080075 | CK203075 | KSF080-075A | NPF080075 | 41 | 20.3 | 12.7 | 6.35 |
| NK203090 | 78210 | FS-080090 | CK203090 | KSF080-090A | NPF080090 | 49 | 20.3 | 12.7 | 6.35 |
| NK229060 | 78059 | FS-090060 | CK229060 | KSF090-060A | NPF090060 | 43 | 22.9 | 14 | 7.62 |
| NK229075 | 78315 | FS-090075 | CK229075 | KSF090-075A | NPF090075 | 54 | 22.9 | 14 | 7.62 |
| NK229090 | 78314 | FS-090090 | CK229090 | KSF090-090A | NPF090090 | 65 | 22.9 | 14 | 7.62 |
| NK234060 | 78351 | FS-092060 | CK234060 | KSF092-060A | NPF092060 | 51 | 23.6 | 14.4 | 8.89 |
| NK234075 | 78355 | FS-092075 | CK234075 | KSF092-075A | NPF092075 | 63 | 23.6 | 14.4 | 8.89 |
| NK234090 | 78354 | FS-092090 | CK234090 | KSF092-090A | NPF092090 | 76 | 23.6 | 14.4 | 8.89 |
| NK270026 | 78932 | FS-106026 | CK270026 | KSF106-026A | NPF106026 | 32 | 26.9 | 14.7 | 11.2 |
| NK270060 | 78894 | FS-106060 | CK270060 | KSF106-060A | NPF106060 | 75 | 26.9 | 14.7 | 11.2 |
| NK270075 | 78935 | FS-106075 | CK270075 | KSF106-075A | NPF106075 | 94 | 26.9 | 14.7 | 11.2 |
| NK270090 | 78934 | FS-106090 | CK270090 | KSF106-090A | NPF106090 | 113 | 26.9 | 14.7 | 11.2 |
| NK330026 | 78550 | FS-130026 | CK330026 | KSF130-026A | NPF130026 | 28 | 33 | 19.9 | 10.7 |
| NK330060 | 78071 | FS-130060 | CK330060 | KSF130-060A | NPF130060 | 61 | 33 | 19.9 | 10.7 |
| NK330075 | 78553 | FS-130075 | CK330075 | KSF130-075A | NPF130075 | 76 | 33 | 19.9 | 10.7 |
| NK330090 | 78552 | FS-130090 | CK330090 | KSF130-090A | NPF130090 | 91 | 33 | 19.9 | 10.7 |
| NK343026 | 78587 | FS-135026 | CK343026 | KSF135-026A | NPF135026 | 16 | 34.3 | 23.37 | 8.89 |
| NK343060 | 78586 | FS-135060 | CK343060 | KSF135-060A | NPF135060 | 38 | 34.3 | 23.37 | 8.89 |
| NK343075 | 78590 | FS-135075 | CK343075 | KSF135-075A | NPF135075 | 47 | 34.3 | 23.37 | 8.89 |
| NK343090 | 78589 | FS-135090 | CK343090 | KSF135-090A | NPF135090 | 57 | 34.3 | 23.37 | 8.89 |
| NK358026 | 78326 | FS-141026 | CK358026 | KSF141-026A | NPF141026 | 24 | 35.8 | 22.4 | 10.5 |
| NK358060 | 78076 | FS-141060 | CK358060 | KSF141-060A | NPF141060 | 56 | 35.8 | 22.4 | 10.5 |
| NK358075 | 78329 | FS-141075 | CK358075 | KSF141-075A | NPF141075 | 70 | 35.8 | 22.4 | 10.5 |
| NK358090 | 78328 | FS-141090 | CK358090 | KSF141-090A | NPF141090 | 84 | 35.8 | 22.4 | 10.5 |
| NK378026 | - | - | - | - | - | 39 | 37.9 | 22.9 | 15.0 |
| NK378060 | - | - | - | - | - | 90 | 37.9 | 22.9 | 15.0 |

# 环形磁粉心型号对照表
# Cross Reference of Ring-Cores

| NCD | MAGNETICS | ARNOLD | CSC | KDM | POCO | AL(nH/N²) | OD(mm) | IN(mm) | HT(mm) |
|---|---|---|---|---|---|---|---|---|---|
| NK378075 | - | - | - | - | - | 113 | 37.9 | 22.9 | 15.0 |
| NK378090 | - | - | - | - | - | 135 | 37.9 | 22.9 | 15.0 |
| NK400026 | 78256 | FS-157026 | CK400026 | KSF157-026A | NPF157026 | 35 | 39.9 | 24.1 | 14.5 |
| NK400060 | 78083 | FS-157060 | CK400060 | KSF157-060A | NPF157060 | 81 | 39.9 | 24.1 | 14.5 |
| NK400075 | 78259 | FS-157075 | CK400075 | KSF157-075A | NPF157075 | 101 | 39.9 | 24.1 | 14.5 |
| NK400090 | 78258 | FS-157090 | CK400090 | KSF157-090A | NPF157090 | 121 | 39.9 | 24.1 | 14.5 |
| NK401026 | - | - | - | | NPF158026 | 53 | 40.13 | 22.08 | 17.0 |
| NK401060 | - | - | - | | NPF158060 | 119 | 40.13 | 22.08 | 17.0 |
| NK401090 | - | - | - | | NPF158090 | 183 | 40.13 | 22.08 | 17.0 |
| NK467026 | 78440 | FS-184026 | CK467026 | KSF184-026A | NPF184026 | 59 | 46.7 | 24.1 | 18 |
| NK467060 | 78439 | FS-184060 | CK467060 | KSF184-060A | NPF184060 | 135 | 46.7 | 24.1 | 18 |
| NK467075 | 78443 | FS-184075 | CK467075 | KSF184-075A | NPF184075 | 169 | 46.7 | 24.1 | 18 |
| NK467090 | 78442 | FS-184090 | CK467090 | KSF184-090A | NPF184090 | 202 | 46.7 | 24.1 | 18 |
| NK468026 | 78091 | FS-185026 | CK468026 | KSF185-026A | NPF185026 | 37 | 46.7 | 28.7 | 15.2 |
| NK468060 | 78090 | FS-185060 | CK468060 | KSF185-060A | NPF185060 | 86 | 46.7 | 28.7 | 15.2 |
| NK468075 | 78094 | FS-185075 | CK468075 | KSF185-075A | NPF185075 | 107 | 46.7 | 28.7 | 15.2 |
| NK468090 | 78093 | FS-185090 | CK468090 | KSF185-090A | NPF185090 | 128 | 46.7 | 28.7 | 15.2 |
| NK508026 | 78717 | FS-200026 | CK508026 | KSF200-026A | NPF200026 | 32 | 50.8 | 31.8 | 13.5 |
| NK508060 | 78716 | FS-200060 | CK508060 | KSF200-060A | NPF200060 | 73 | 50.8 | 31.8 | 13.5 |
| NK508075 | 78720 | FS-200075 | CK508075 | KSF200-075A | NPF200075 | 91 | 50.8 | 31.8 | 13.5 |
| NK508090 | 78719 | FS-200090 | CK508090 | KSF200-090A | NPF200090 | 109 | 50.8 | 31.8 | 13.5 |
| NK571026 | 78191 | FS-226026 | CK571026 | KSF226-026A | NPF226026 | 60 | 57.2 | 26.4 | 15.2 |
| NK571060 | 78192 | FS-226060 | CK571060 | KSF226-060A | NPF226060 | 138 | 57.2 | 26.4 | 15.2 |
| NK571075 | 78193 | FS-226075 | CK571075 | KSF226-075A | NPF226075 | 172 | 57.2 | 26.4 | 15.2 |
| NK571090 | 78194 | FS-226090 | CK571090 | KSF226-090A | NPF226090 | 207 | 57.2 | 26.4 | 15.2 |
| NK572026 | 78111 | FS-225026 | CK572026 | KSF225-026A | NPF225026 | 33 | 57.2 | 35.6 | 14 |
| NK572060 | 78110 | FS-225060 | CK572060 | KSF225-060A | NPF225060 | 75 | 57.2 | 35.6 | 14 |
| NK572075 | 78214 | FS-225075 | CK572075 | KSF225-075A | NPF225075 | 94 | 57.2 | 35.6 | 14 |
| NK572090 | 78213 | FS-225090 | CK572090 | KSF225-090A | NPF225090 | 112 | 57.2 | 35.6 | 14 |
| NK610026 | 78615 | - | CK610026 | KSF250-026A | NPF250026 | 83 | 62 | 32.6 | 25 |
| NK610060 | 78617 | - | CK610060 | KSF250-060A | NPF250060 | 192 | 62 | 32.6 | 25 |
| NK610075 | 78618 | - | CK610075 | KSF250-075A | NPF250075 | 240 | 62 | 32.6 | 25 |
| NK610090 | 78619 | - | CK610090 | KSF250-090A | NPF250090 | 288 | 62 | 32.6 | 25 |
| NK680026 | 78074 | - | CK680026 | KSF268-026A | - | 62 | 68.8 | 36 | 20 |
| NK680060 | 78072 | - | CK680060 | KSF268-060A | - | 143 | 68.8 | 36 | 20 |
| NK680075 | 78069 | - | CK680075 | KSF268-075A | - | 179 | 68.8 | 36 | 20 |
| NK680090 | 78068 | - | CK680090 | KSF268-090A | - | 215 | 68.8 | 36 | 20 |
| NK740026 | 78735 | - | CK740026 | KSF290-026A | - | 89 | 74.1 | 45.3 | 35 |
| NK740060 | 78737 | - | CK740060 | KSF290-060A | - | 206 | 74.1 | 45.3 | 35 |
| NK740075 | 78738 | - | CK740075 | KSF290-075A | - | 257 | 74.1 | 45.3 | 35 |
| NK740090 | 78739 | - | CK740090 | KSF290-090A | - | 309 | 74.1 | 45.3 | 35 |
| NK777026 | 78868 | FS-300026 | CK777026 | KSF300-026A | NPF300026 | 30 | 77.8 | 49.2 | 12.7 |

# 环形磁粉心型号对照表
# Cross Reference of Ring-Cores

| NCD | MAGNETICS | ARNOLD | CSC | KDM | POCO | AL (nH/N$^2$) | OD (mm) | IN (mm) | HT (mm) |
|---|---|---|---|---|---|---|---|---|---|
| NK777060 | 78867 | FS-300060 | CK777060 | KSF300-060A | NPF300060 | 68 | 77.8 | 49.2 | 12.7 |
| NK777090 | 78870 | FS-300090 | CK777090 | KSF300-090A | NPF300090 | 102 | 77.8 | 49.2 | 12.7 |
| NK778026 | 78908 | FS-301026 | CK778026 | KSF301-026A | NPF306026 | 37 | 77.8 | 49.2 | 15.9 |
| NK778060 | 78907 | FS-301060 | CK778060 | KSF301-060A | NPF306060 | 85 | 77.8 | 49.2 | 15.9 |
| NK778090 | 78910 | FS-301090 | CK778090 | KSF301-090A | NPF306090 | 128 | 77.8 | 49.2 | 15.9 |
| NK1020026E13.6 | - | FS-401026 | - | KSF401-026A | NPF400026 | 40 | 101.6 | 57.15 | 13.6 |
| NK1020060E13.6 | - | FS-401060 | - | KSF401-060A | NPF400060 | 92.3 | 101.6 | 57.15 | 13.6 |
| NK1020090E13.6 | - | FS-401090 | - | KSF401-090A | NPF400090 | 139 | 101.6 | 57.15 | 13.6 |
| NK1020026E16.5 | 78102 | FS-400026 | CK1016026 | KSF400-026A | NPF401026 | 48 | 101.6 | 57.15 | 16.5 |
| NK1020060E16.5 | 78099 | FS-400060 | CK1016060 | KSF400-060A | NPF401060 | 112 | 101.6 | 57.15 | 16.5 |
| NK1020090E16.5 | 78096 | FS-400090 | - | KSF400-090A | NPF401090 | 228 | 101.6 | 57.15 | 16.5 |

# 环形磁粉心型号对照表
# Cross Reference of Ring-Cores

| NCD | MAGNETICS | ARNOLD | CSC | KDM | AL (nH/N$^2$) | OD (mm) | IN (mm) | HT (mm) |
|---|---|---|---|---|---|---|---|---|
| NH078060 | 58031 | HF-031060 | CH078060 | KH031-060A | 25 | 7.87 | 3.96 | 3.18 |
| NH078125 | 58030 | HF-031125 | CH078125 | KH031-125A | 52 | 7.87 | 3.96 | 3.18 |
| NH102060 | 58041 | HF-040060 | CH102060 | KH040-060A | 32 | 10.2 | 5.08 | 3.96 |
| NH102125 | 58040 | HF-040125 | CH102125 | KH040-125A | 66 | 10.2 | 5.08 | 3.96 |
| NH127125 | 58050 | HF-050125 | CH127125 | KH050-125A | 56 | 12.7 | 7.62 | 4.75 |
| NH166060 | 58121 | HF-065060 | CH166060 | KH065-060A | 35 | 16.6 | 10.2 | 6.35 |
| NH166125 | 58120 | HF-065125 | CH166125 | KH065-125A | 72 | 16.6 | 10.2 | 6.35 |
| NH172060 | 58381 | HF-068060 | CH172060 | KH068-060A | 43 | 17.3 | 9.65 | 6.35 |
| NH172125 | 58380 | HF-068125 | CH172125 | KH068-125A | 89 | 17.3 | 9.65 | 6.35 |
| NH203060 | 58848 | HF-080060 | CH203060 | KH080-060A | 32 | 20.3 | 12.7 | 6.35 |
| NH203125 | 58206 | HF-080125 | CH203125 | KH080-125A | 68 | 20.3 | 12.7 | 6.35 |
| NH229060 | 58059 | HF-090060 | CH229060 | KH090-060A | 43 | 22.9 | 14 | 7.62 |
| NH229125 | 58310 | HF-090125 | CH229125 | KH090-125A | 90 | 22.9 | 14 | 7.62 |
| NH234060 | 58351 | HF-092060 | CH234060 | KH092-060A | 51 | 23.6 | 14.4 | 8.89 |
| NH234125 | 58350 | HF-092125 | CH234125 | KH092-125A | 105 | 23.6 | 14.4 | 8.89 |
| NH270026 | 58932 | HF-106026 | CH270026 | KH106-026A | 32 | 26.9 | 14.7 | 11.2 |
| NH270060 | 58894 | HF-106060 | CH270060 | KH106-060A | 75 | 26.9 | 14.7 | 11.2 |
| NH270125 | 58930 | HF-106125 | CH270125 | KH106-125A | 157 | 26.9 | 14.7 | 11.2 |
| NH330026 | 58550 | HF-130026 | CH330026 | KH130-026A | 28 | 33 | 19.9 | 10.7 |
| NH330060 | 58071 | HF-130060 | CH330060 | KH130-060A | 61 | 33 | 19.9 | 10.7 |
| NH330125 | 58548 | HF-130125 | CH330125 | KH130-125A | 127 | 33 | 19.9 | 10.7 |
| NH343026 | 58587 | HF-135026 | CH343026 | KH135-026A | 16 | 34.3 | 23.37 | 8.89 |
| NH343060 | 58586 | HF-135060 | CH343060 | KH135-060A | 38 | 34.3 | 23.37 | 8.89 |
| NH343125 | 58585 | HF-135125 | CH343125 | KH135-125A | 79 | 34.3 | 23.37 | 8.89 |
| NH358026 | 58326 | HF-141026 | CH358026 | KH141-026A | 24 | 35.8 | 22.4 | 10.5 |
| NH358060 | 58076 | HF-141060 | CH358060 | KH141-060A | 56 | 35.8 | 22.4 | 10.5 |
| NH358125 | 58324 | HF-141125 | CH358125 | KH141-125A | 117 | 35.8 | 22.4 | 10.5 |
| NH378026 | - | - | - | - | - | 37.9 | 22.9 | 15.0 |
| NH378060 | - | - | - | - | - | 37.9 | 22.9 | 15.0 |
| NH378125 | - | - | - | - | - | 37.9 | 22.9 | 15.0 |
| NH400026 | 58256 | HF-157026 | CH400026 | KH157-026A | 35 | 39.9 | 24.1 | 14.5 |
| NH400060 | 58083 | HF-157060 | CH400060 | KH157-060A | 81 | 39.9 | 24.1 | 14.5 |
| NH400125 | 58254 | HF-157125 | CH400125 | KH157-125A | 168 | 39.9 | 24.1 | 14.5 |
| NH467026 | 58440 | HF-184026 | CH467026 | KH184-026A | 59 | 46.7 | 24.1 | 18 |
| NH467060 | 58439 | HF-184060 | CH467060 | KH184-060A | 135 | 46.7 | 24.1 | 18 |
| NH467125 | 58438 | HF-184125 | CH467125 | KH184-125A | 281 | 46.7 | 24.1 | 18 |
| NH468026 | 58091 | HF-185026 | CH468026 | KH185-026A | 37 | 46.7 | 28.7 | 15.2 |
| NH468060 | 58090 | HF-185060 | CH468060 | KH185-060A | 86 | 46.7 | 28.7 | 15.2 |
| NH468125 | 58089 | HF-185125 | CH468125 | KH185-125A | 178 | 46.7 | 28.7 | 15.2 |
| NH508026 | 58717 | HF-200026 | CH508026 | KH200-026A | 32 | 50.8 | 31.8 | 13.5 |
| NH508060 | 58716 | HF-200060 | CH508060 | KH200-060A | 73 | 50.8 | 31.8 | 13.5 |
| NH508125 | 58715 | HF-200125 | CH508125 | KH200-125A | 152 | 50.8 | 31.8 | 13.5 |

# 环形磁粉心型号对照表
# Cross Reference of Ring-Cores

| NCD | MAGNETICS | ARNOLD | CSC | KDM | AL (nH/N$^2$) | OD (mm) | IN (mm) | HT (mm) |
|---|---|---|---|---|---|---|---|---|
| NH571026 | 58191 | HF-226026 | CH571026 | KH226-026A | 60 | 57.2 | 26.4 | 15.2 |
| NH571060 | 58192 | HF-226060 | CH571060 | KH226-060A | 138 | 57.2 | 26.4 | 15.2 |
| NH571125 | 58195 | HF-226125 | CH571125 | KH226-125A | 287 | 57.2 | 26.4 | 15.2 |
| NH572026 | 58111 | HF-225026 | CH572026 | KH225-026A | 33 | 57.2 | 35.6 | 14 |
| NH572060 | 58110 | HF-225060 | CH572060 | KH225-060A | 75 | 57.2 | 35.6 | 14 |
| NH572125 | 58109 | HF-225125 | CH572125 | KH225-125A | 156 | 57.2 | 35.6 | 14 |
| NH610026 | 58615 | - | CH610026 | HK250-026A | 83 | 62 | 32.6 | 25 |
| NH610060 | 58617 | - | CH610060 | HK250-060A | 192 | 62 | 32.6 | 25 |
| NH610125 | 58620 | - | CH610125 | HK250-125A | 400 | 62 | 32.6 | 25 |
| NH680026 | 58074 | - | CH680026 | KH268-026A | 62 | 68.8 | 36 | 20 |
| NH680060 | 58072 | - | CH680060 | KH268-060A | 143 | 68.8 | 36 | 20 |
| NH680125 | 58070 | - | CH680125 | KH268-125A | 298 | 68.8 | 36 | 20 |
| NH740026 | 58735 | - | CH740026 | KH290-026A | 89 | 74.1 | 45.3 | 35 |
| NH740060 | 58737 | - | CH740060 | KH290-060A | 206 | 74.1 | 45.3 | 35 |
| NH740125 | - | - | CH740125 | KH290-125A | 429 | 74.1 | 45.3 | 35 |
| NH777026 | 58868 | HF-300026 | CH777026 | KH300-026A | 30 | 77.8 | 49.2 | 12.7 |
| NH777060 | 58867 | HF-300060 | CH777060 | KH300-060A | 68 | 77.8 | 49.2 | 12.7 |
| NH777125 | 58866 | HF-300125 | CH777125 | KH300-125A | 142 | 77.8 | 49.2 | 12.7 |
| NH778026 | 58908 | HF-301026 | CH778026 | KH301-026A | 37 | 77.8 | 49.2 | 15.9 |
| NH778060 | 58907 | HF-301060 | CH778060 | KH301-060A | 85 | 77.8 | 49.2 | 15.9 |
| NH778125 | 58906 | HF-301125 | CH778125 | KH301-125A | 178 | 77.8 | 49.2 | 15.9 |
| NH1020026E13.6 | - | HF-401026 | - | KH401-026A | 40 | 101.6 | 57.15 | 13.6 |
| NH1020060E13.6 | - | HF-401060 | - | KH401-060A | 92.3 | 101.6 | 57.15 | 13.6 |
| NH1020125E13.6 | - | HF-401125 | - | KH401-125A | 192 | 101.6 | 57.15 | 13.6 |
| NH1020026E16.5 | 58102 | HF-400026 | CH1016026 | KH400-026A | 48 | 101.6 | 57.15 | 16.5 |
| NH1020060E16.5 | 58099 | HF-400060 | CH1016060 | KH400-060A | 112 | 101.6 | 57.15 | 16.5 |
| NH1020125E16.5 | - | HF-400125 | CH1016125 | KH400-125A | 228 | 101.6 | 57.15 | 16.5 |