- **Features:**
  - ✓ Standard slim model, height: 29mm
  - ✓ Input voltage: 90～264VAC
  - ✓ -40~+65℃ working temperature (refer to derating curve)
  - ✓ Cooling by free air convection
  - ✓ Protections: short circuit/overload/ overvoltage
  - ✓ 100% full load burn-in test
  - ✓ High efficiency, high reliability
  - ✓ 2 years warranty

- **Applications:** LED high definition screen、LED transparent、LED grille screen and so on.
- **Product certifications:**

- **Standards**

EN55024\EN61000-4-2,3,4,5,6,8,11\GB17625.1\EN61000-3-2,-3\EN55022\GB4943\UL1012

- **Product description:**

A-200FAU-PN is Led display power supply without fans. The input voltage rang is 90～264VAC and output voltages are 2.8V、3.3V、3.8V、4.2V、4.5V、4.5V、4.6V、4.8V、5V and so on. It can be applied to Led display、LED indicator light and other Led display fileds. This series of products are ultra-thin with PFC and current sharing design, with a height of only 29mm. It can adapt to a variety of box size requirements. Super high efficiency, compact shell design and good heat dissipation ensure the long-term stable work of this series of products.

- **Model Encoding**

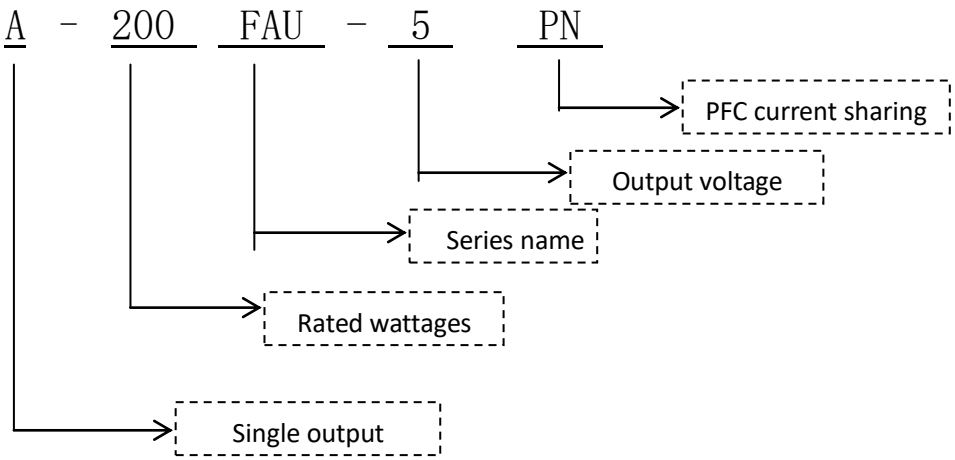

- SPECIFICATION

型号		A-200FAU-2.8PN	A-200FAU-3.3PN	A-200FAU-3.8PN	A-200FAU-4.2PN	A-200FAU-4.5PN	A-200FAU-4.6PN	A-200FAU-4.8PN	A-200FAU-5PN
Input	Voltage range	90～264VAC							
	Input current	115VAC/2.3A							
		230VAC/1.2A							
	Efficiency	≥87%	≥87%	≥88%	≥88%	≥89%	≥89%	≥90%	≥90%
	Frequency range	47～63HZ							
	Leakage current	<3.5mA/240VAC							
	Inrush current	Cold start 40A/230VAC							
	PFC	PF≥0.9							
Output	DC voltage	2.8V	3.3V	3.8V	4.2V	4.5V	4.6V	4.8V	5V
	Rated current	40A	40A	40A	40A	40A	40A	40A	40A
	Power	112W	132W	152W	168W	180W	184W	192W	200W
	Voltage adj.range	/	/	/	/	/	/	/	/
	Ripple and noise	200mVp-p	200mVp-p	200mVp-p	200mVp-p	200mVp-p	200mVp-p	200mVp-p	200mVp-p
	Set up,rise time	2000ms, 50ms/ (230VAC) 100% load							
	Hold up time	20ms/230VAC 100% load							
	Line regulation	±0.5%	±0.5%	±0.5%	±0.5%	±0.5%	±0.5%	±0.5%	±0.5%
	Load regulation	±2.0%	±2.0%	±2.0%	±2.0%	±2.0%	±2.0%	±2.0%	±2.0%
	Output Voltage Accuracy	±2.0%	±2.0%	±2.0%	±2.0%	±2.0%	±2.0%	±2.0%	±2.0%
EMC	EMS	Design refer to:EN55024 ;EN61000-4-2,3,4,5,6,8,11							
	Harmonic current	Design refer to:GB17625.1;EN61000-3-2,-3							
	EMC	Design refer to:EN55022, Class A							
Safety	Safety standard	Design refer to:GB4943/UL1012							
	Withstand voltage	I/P-O/P:3KVac/10mA; I/P-CASE:1.5KVac/10mA; O/P-CASE:0.5KVAC/10mA Testing time:1min							
	Isolation resistance	I/P-O/P:100M ohms; I/P-Case:100M ohms; O/P-Case:100M ohms							
Protections	Over Voltage	110%~150% voltage limiting type							
	Over load	120~200% Hiccup mode, recovers automatically after fault condition is removed							
	Over Temperature	/							
	Short circuit	Hiccup mode, recovers automatically after fault condition is removed							
Environment	Working temperature and humidity	-40~65℃ 20%~95%RH no condensing (refer to derating curve)							
	Storage temperature	-40℃~85℃; 10%~95%RH no condensing							

	and humidity	
	Vibration	Frequency range 10 ~ 500Hz, acceleration 2G, each sweep cycle for 10min, 6 sweep cycles along X, y, Z axis
	Shock	Acceleration: 20g, duration: 11ms, 3 impacts along X, y, Z axis
	Altitude	2000mtrs（for every 100 m higher than 2000 m, the ambient temperature decreases by 0.6 ℃）
Reliability	MTBF	25℃:100000Hrs, MIL-217 Method
Others	Size	130*55*29 mm（L*W*H）
	Packing	0.27Kg/pc, 60pcs/carton, 14KG/carton
	Cooling mode	☑ Free air ☐ Fan
	Extension mode	☐ three proofings ☐ terminal cover ☐ Low temperature start（-40℃） ☐ Others
Remarks	*In order to extend the lifetime, it is recommended to configure the load more than 30% of the remaining allowance. For example: the power of the device requires 100W, then use the power of not less than 130W. *Ripple test method: 20MHz oscilloscope in power output terminal test, oscilloscope probe wire length is not more than 12mm, and input parallel 47uF electrolytic capacitors and 0.1uF high frequency capacitance probe. *All electrical performance tests are performed at 25 C. *When the product is used in full load, the aluminum plate with an area of 400 * 400 * 3mm shall be added for auxiliary heat dissipation. *The power supply is a part of the components of the equipment system. All EMC tests are conducted by installing the sample on the metal plate. The power supply shall be confirmed with the terminal equipment for electromagnetic compatibility.	

- Derating curve

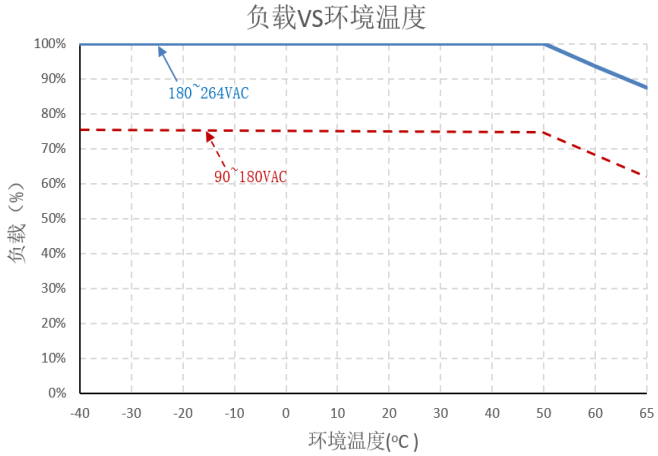

- Static Characteristics

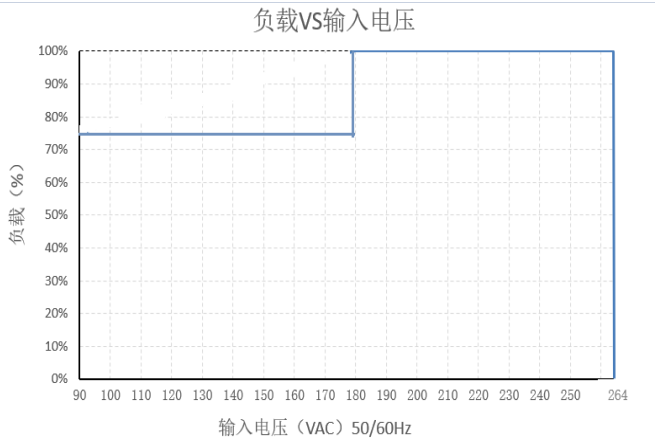

- Mechanical Specification

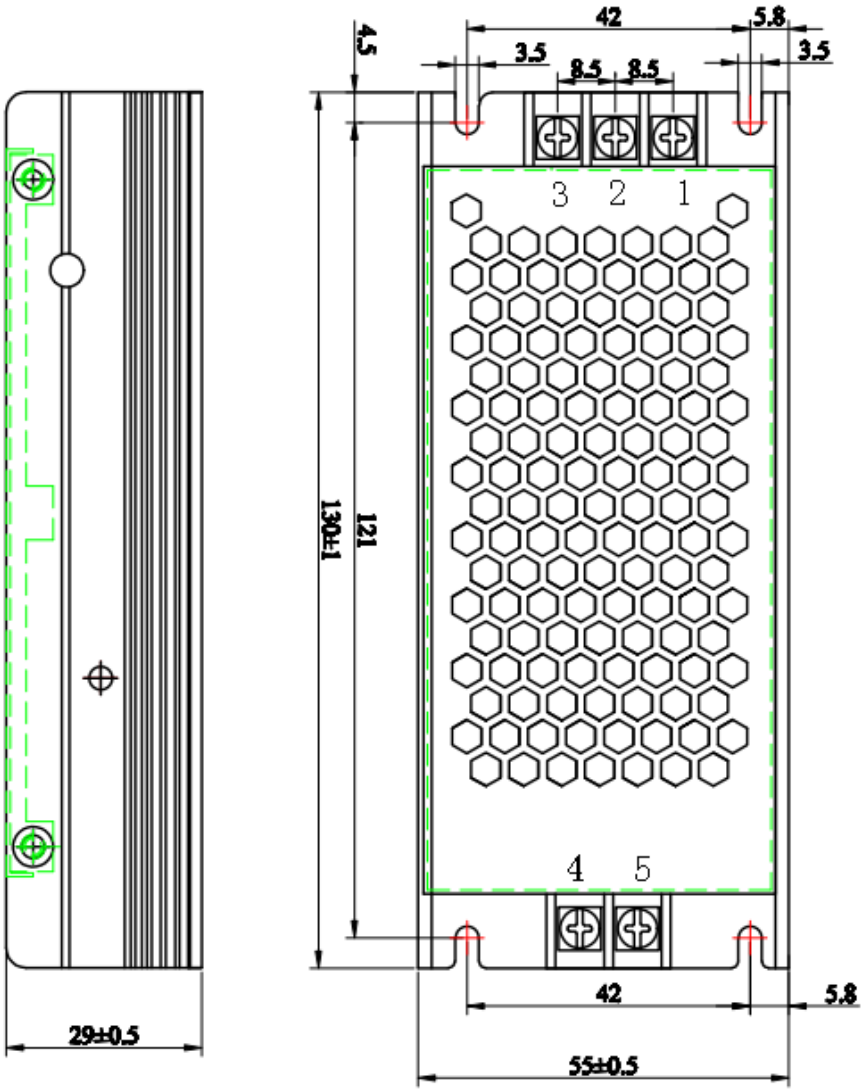

- Installation

Warning

- Using the mounting screws M3*6mm,
- Deep housing screw dept MAX 3mm,
- As shown on the right

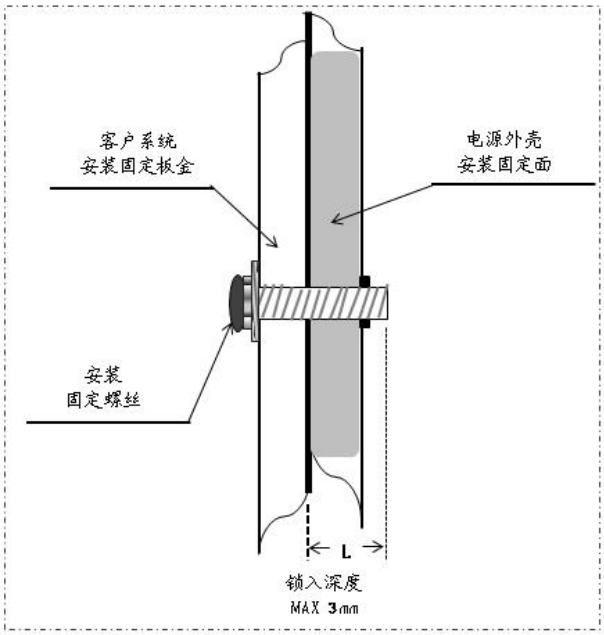

Current sharing connection mode

Current saring			
EC	1	EC	white 2.0 spacing connector
	2	GND	

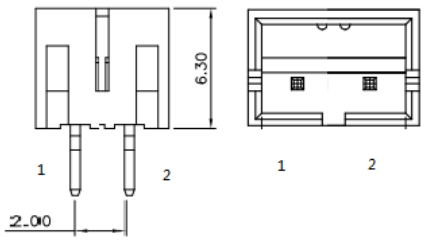

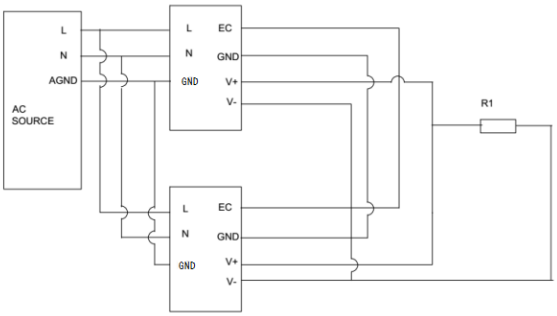

Connect the power supply as shown in the figure:

Input L, N and AGND are respectively connected to the L, N and GND ends of the power supply, two current sharing interfaces of the power supply- white 2.0 spacing connector EC end (1 pin), GND end (2 pins) are connected, and output end V+, V- is connected to the load.

1. If the power supply is used for backup, it can work with full load;
2. If the power supply is used in power superposition, it needs to be derated to 90%;
3. Average current of power supply<= 10%
4. When the power supply is used in parallel, the maximum number of parallel power supply is <=3 (if more parallel power supply is needed, please contact the manufacturer).

Product installation and Instructions:

1、When installing, please follow the mechanical size and installation method.

2、Before commissioning, please check and proofread the connections on the terminals to make sure that the input and output, AC and DC, positive and negative poles, voltage and current values are correct,

to prevent the occurrence of reverse connection errors and to avoid damage to power supply and user equipment.

3、Please use the multimeter to measure whether the fire line, zero line and ground line are short-circuited and whether the output terminal is short-circuited before power is turned on.

4、Do not exceed the nominal value of the power supply in use, so as to avoid affecting the reliability of the product. If you need to change the output parameters of the power supply, please consult the technical department of our company before using the power supply to ensure the effectiveness and reliability of the use.

5、To ensure safety and reduce interference, ensure reliable grounding of grounding end (grounding wire>AWG18#).

6、If the power supply fails, please do not repair it without authorization. Please contact our customer service department as soon as possible. Customer service line: 86-519-85215050。

● Transport and storage:

1、Transport:

This packing is suitable for transportation of automobiles, ships, airplanes and trains. It should be rainproof and handled civilly during transportation.

2、Storage:

When the product is not in use, it should be placed in the packing box. The storage environment temperature and relative humidity should meet the requirements of the product. There should be no corrosive gas or products in the warehouse, and there should be no strong mechanical vibration, impact and strong magnetic field. Packing box should be at least 20 cm high from the ground, do not allow water immersion. If the storage time is too long (more than one year), it should be re-examined by professionals before it can be used.