- **Features**
  - ✓ Slim model, Height 30mm
  - ✓ Working temp: -30~+70℃ (refer to output derating curve)
  - ✓ Protection: Short circuit / Over load/Over voltage
  - ✓ 100% aging test
  - ✓ High-efficiency, high reliability
  - ✓ 2 years warranty

- **Applications:** Industrial control systems, machinery and electrical equipment, electronic instrumentation, industrial automation, household appliances, etc

- **Reference standard**

  EN55024\EN61000-4-2,3,4,5,6,8,11\GB17625.1\EN61000-3-2,-3\EN55022\GB4943\UL1012

- **Product description**

A-200GD series is an industrial control power supply with 200w single-channel constant-voltage output. The input voltage range is 176-264 VAC, and the output voltage is 12v, 24v, 36v, 48v etc. It can be applied to various industrial fields such as industrial control systems, machinery and electrical equipment, electronic instruments and meters, industrial automation, household appliances etc. The ultra-high efficiency, compact profile design, good heat dissipation, guarantee the long-term stable work of this series of products.

- **Product name**

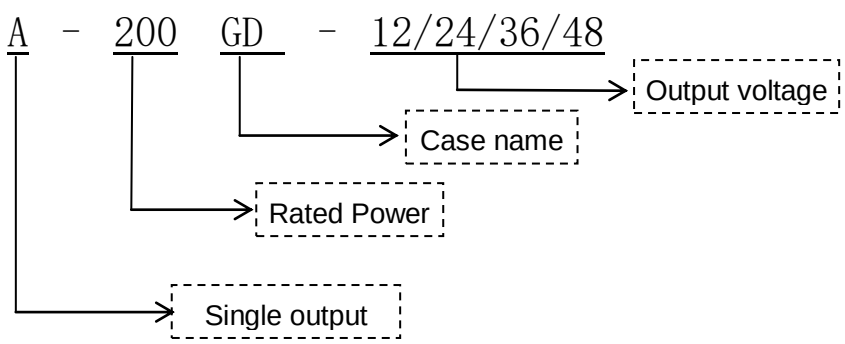

- General Specifications

Model		A-200GD-12	A-200GD-24	A-200GD-36	A-200GD-48
Input	Input voltage	176～264VAC			
	Input current	230VAC/2.5A			
	Efficiency	87%	88%	89%	89%
	Frequency range	47～63HZ			
	Leakage current	<0.75mA/240VAC			
	Inrush current	COLD START 60A/230VAC			
Output	DC voltage	12V	24V	36V	48V
	Rated current	16.66A	8.3A	5.5A	4.17A
	Rated power	200W	200W	200W	200W
	Voltage ADJ.range	±10.0%	±10.0%	±10.0%	±10.0%
	Ripple & Noise	≤250mV	≤300mV	≤300mV	≤300mV
	Set up,rise	2500ms, 50ms/230VAC at full load			
	hold up time	20ms/230VAC at full load			
	Line regulation	±0.5%	±0.5%	±0.5%	±0.5%
	Load regulation	±1.0%	±1.0%	±1.0%	±1.0%
	Voltage accuracy	±1.0%	±1.0%	±1.0%	±1.0%
EMC	EMS	Design refer:EN55024 ;EN61000-4-2,3,4,5,6,8,11			
	Harmonic current	Design refer:GB17625.1;EN61000-3-2,-3 限值要求			
	EMI	Design refer:EN55022 class A			
Safety	Safety Standard	Design refer:GB4943/UL1012			
	Withstand voltage	I/P-O/P:3KVac/5mA; I/P-CASE:1.5KVac/5mA; O/P-CASE:0.5KVAC/5mA 1min for each test			
	Isolation resistance	I/P-O/P:50M ohms; I/P-Case:50M ohms; O/P-Case:50M ohms			
Protection	Over Voltage	13.5～16.5V	27～33V	41～48V	54～64V
		Voltage limiting type			
	Over Load	110～150% rated Hiccup mode,auto-recovery after faulty condition removed			
	Over Temp	/			
	Short Current	Hiccup mode,auto-recovery after faulty condition removed			
Environment	Working Temp&humidity	-30~70℃ 20%~95%RH non-condensing （Refer to Derating Curve）			
	Storage Temp&humidity	-40℃~85℃; 10%~95%RH non-condensing			
	Vibration	10~500Hz,2G, 10min/1 cycle,60min.each along X,Y, Z axes			
	Impact	20G, last 11mS, 3 impacts along X, y and Z axes			
	Altitude	the ambient temperature derating of 0.6 ℃/100m for operating altitude higher than 2000m			
Reliability	MTBF	25℃环境下:100000Hrs, MIL-217 Method			
Others	Size	159*97*30mm（L*W*H）			
	Packing	0.3Kg/piece,40 只/ctn, 14KG/ctn			
	Cold mode	☑free air convection ☐with fan			
	More options	☐ PCB double side conformal coating ☐ Terminal with cover ☐ low temp start （-40℃） ☐ Other			
Notes	*In order to extend the service life, it is recommended to leave 30% more allowance when loading. For example, if the equipment needs 100W power, please choose the power supply over 130W. *Ripple&noise are measured at 20MHz of bandwidth by using a 12’’ twisted pair-wire terminated with a 0.1uf & 47uf parallel capacitor. *All parameters NOT specially mentioned are measured at 230VAC input,rated load and 25℃ of ambient temperature。 *the auxiliary heat dissipation of aluminum plate with an area of 400 * 400 * 3mm must be used when full load working.				

	*The power supply is considered a component which will be installed into a final equipment. The final equipment must be re-confirmed that it still meets EMC directives. All our EMC tests are carried out by mounting samples on metal plates.

● Load and temperature curve

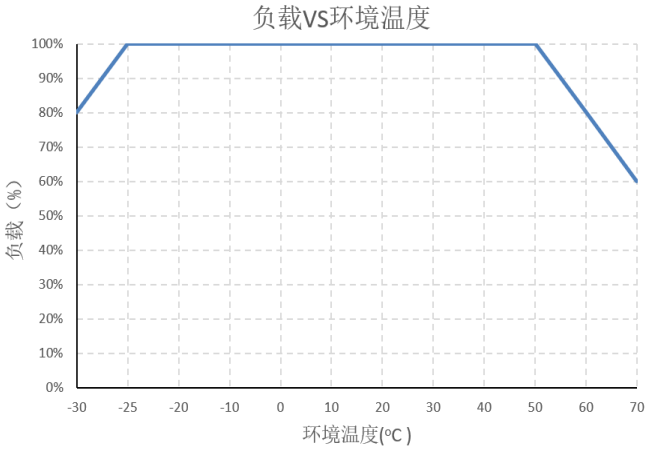

● Static characteristic curve

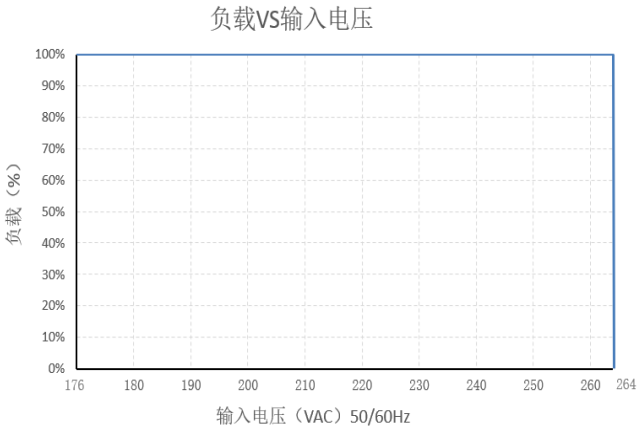

● Install drawing

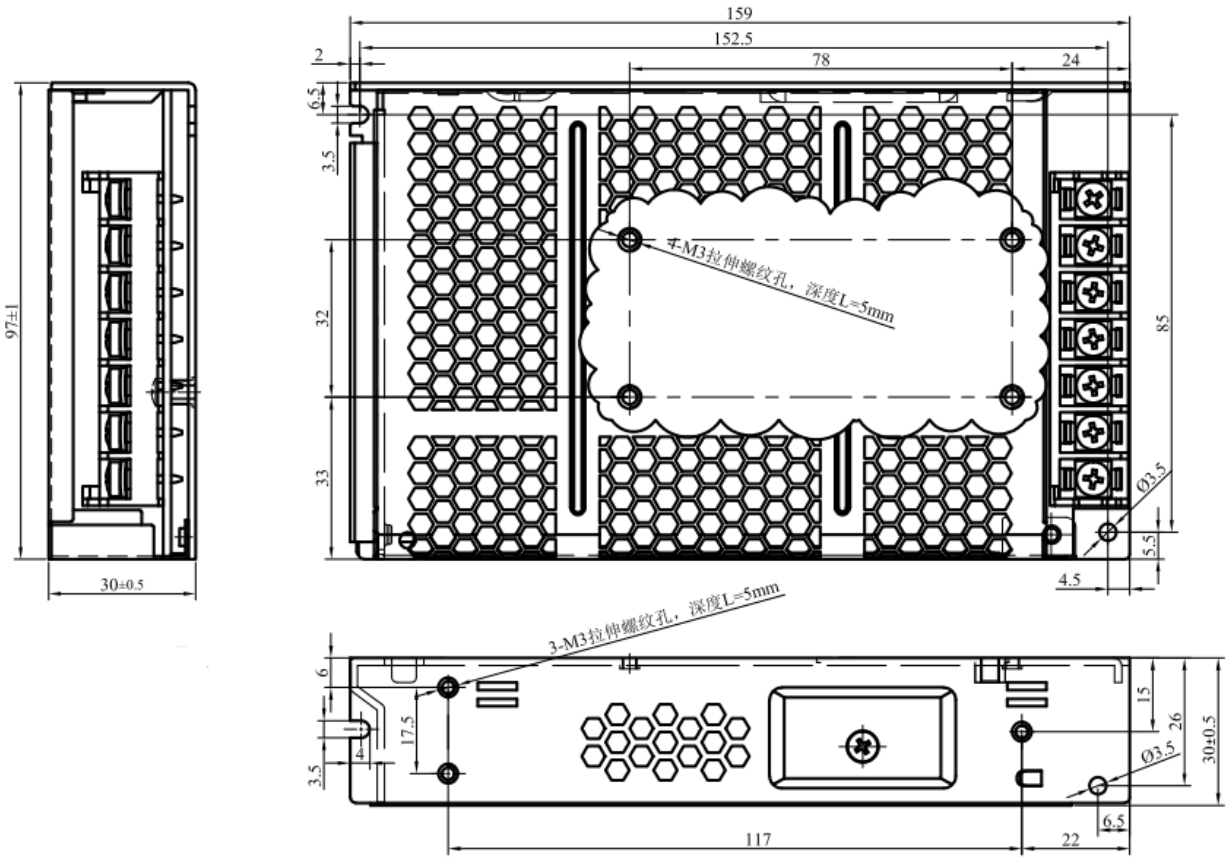

● Installation

Warning	
• Use mounting screws by M3*6mm, • Max depth of screws into housing is 3mm, • Right picture with more details	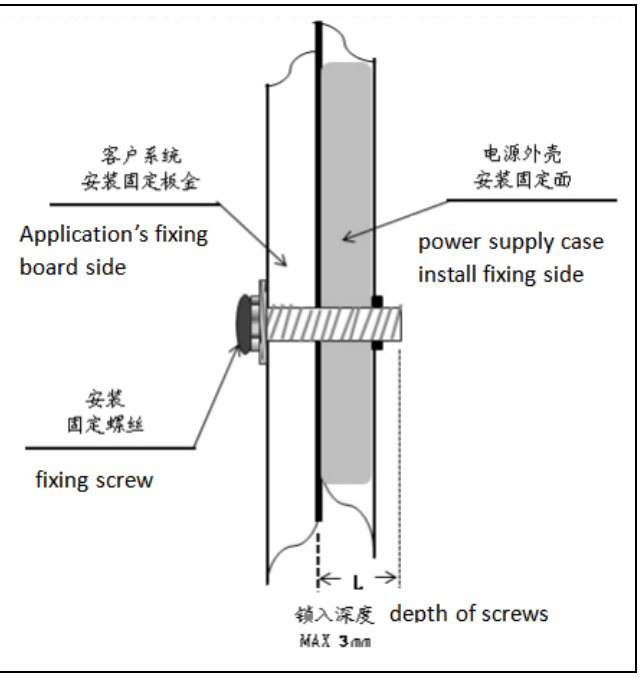

● Instructions:

1、please follow the installation instructions when use the power supply。

2、Before power on test run after installation, please check and proofread the wiring on each terminal, make sure that the input and output, AC and DC, positive and negative, voltage and current values are correct, prevent the occurrence of wrong connection, and avoid damaging the power supply and user equipment。

3、Before power on, please use a multimeter to measure whether the live wire, zero wire and ground wire are short circuited, and whether the output terminal is short circuited; it is better to start without load when power on。

4、Do not exceed the nominal value of the power supply when using, so as not to affect the reliability of the product. If you need to change the output parameters of the power supply, please consult our technical department before using.

5、In order to ensure the safety of use and reduce interference, please ensure that the grounding terminal is reliably grounded (ground wire please thicker than AWG18#) 。

6、If the power supply fails, please do not repair it without permission. Please contact our customer service department as soon as possible, customer service line: 86-519-85215050。

● Transport、storage:

1、Transport:

The package is suitable for shipping by automobiles, ships, airs, trains, etc. During transportation, it shall be rain proof, loaded and unloaded gently。

2、Storage:

When the product is not in use, it shall be placed in the packing box. The storage environment temperature and relative humidity shall meet the requirements of the product. No corrosive gas or product in the warehouse, and no strong mechanical vibration, impact and strong magnetic field. The packing box shall be padded at least 20cm above the ground, and not be soaked. If the storage time is too long (more than 1 year), it shall be rechecked by professionals before use.