● Features

- ➢ Wide input 90-305Vac(Class Ⅰ)
- ➢ IP67 level
- ➢ -40℃-+70℃ working temperature(refer to derating curve)
- ➢ Lightning Protection: Line to Line 4KV, Line to Ground 6KV
- ➢ Short circuit/Over load/Over voltage/Over temperature
- ➢ Three in one dimming function (dimming can be turned off, isolation design)

5 years warranty

- **Application:Outdoor lighting,Architectural lighting,Decorative lighting,Sign light,Mining lamp,High pole lights, Court lights and Street lights, etc.**
- Approvals:

- Standard

EN61547\EN61000-4-2,3,4,5,6,8,11\ GB17625.1\EN61000-3-2 Class C\EN61000-3-3\ EN55015\GB17743\ GB19510.1\14/EN61347-1, -2-13\EN62384\UL8750

- Product Description

CYX-240 series is 240W waterproof power supply with IP67 high protection level. It has three output modes:constant voltage,constant voltage + constant current and constant current. The input voltage ranges are from 90 to 305Vac. It has super high power factor and super low THD. It supports three-in-one dimming. This series of products are designed for high temperature resistance. The working temperature of full load can reach as high as 60 ℃. It is specially designed for outdoor lighting, indoor and outdoor lighting,mining lamps,high pole lamps,stadium lamps and street lamps. Super high efficiency,compact shell design,good heat dissipation,and all-round protection ensure the long-term stability of this series of products.

- Product name:

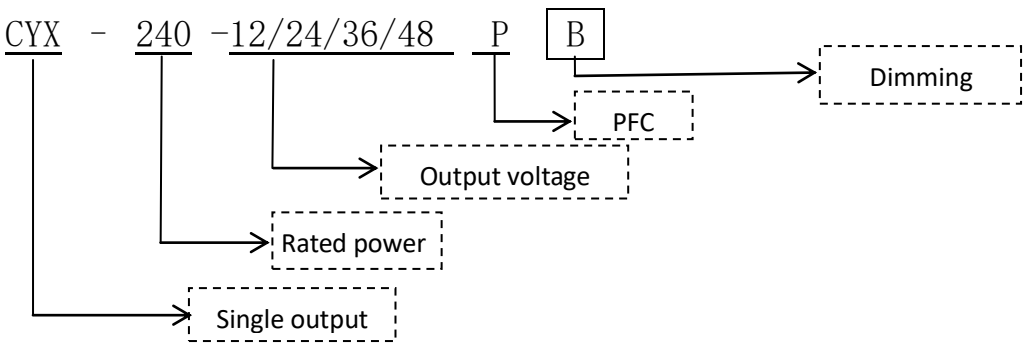

- **Product models:**

Model	Description	Remarks
CYX-240-12P	Constant voltage	
CYX-240-24P	Constant voltage	
CYX-240-36P	Constant voltage and constant current type, constant current value is rated current value. It is recommended that the load should be less than 90% rated value when using constant voltage.	
CYX-240-36PB	Constant current output type, constant current value is rated current value. With three-in-one dimming function (0-10VDC, 10V PWM signal and 0-100K resistor). It is recommended to connect LED directly.	
CYX-240-48P	Constant voltage and constant current type, constant current value is rated current value. It is recommended that the load should be less than 90% rated value when using constant voltage.	
CYX-240-48PB	Constant current output type, constant current value is rated current value. With three-in-one dimming function (0-10VDC, 10V PWM signal and 0-100K resistor). It is recommended to connect LED directly.	

- Electrical parameters

Model		CYX-240-12P	CYX-240-24P	CYX-240-36P/PB	CYX-240-48P/PB
Input	Voltage range	90～305VAC			
	Current	115VAC/2.3A, 230VAC/1.3A, 277VAC/1.1A			
	Frequency	≥92%	≥94%	≥94.5%/≥94%	≥94%/≥93.5%
	Frequency range	47～63HZ			
	Leakage current	<0.75mA/277VAC			
	Inrush current	50A/220VAC（Input 230Vac/50Hz,under 50%Ipeak testing twidth=900us, power supply start-up in cold state)			
	QTY of 16A Circuit Breakers Configurable with the Same Type of Power Supply	230VAC230VAC, configure with 2 pcs(B type breaker)/4 pcs(C type breaker)			
	PF	PF≥0.98/110VAC full load, PF≥0.98/230VAC full load ,or PF≥0.95/277VAC full load PF≥0.94(≥50% Load with 110VAC/230VAC; ≥75% Load with 277VAC）, refer to PF curve			
	THD	THD<10% （≥50% Load 在 110VAC/230VAC; ≥75% Load with 277VAC）			
	No-load/stand by loss	<0.5W（Dimming models could dimming to turn off output）			
Output	DC voltage	12V	24V	36V	48V
	Rated current	18A	10.4A	6.93A	5.21A
	180~305V	216W	249.6W	249.48W	250W
	90~180V	170W/14.16A	199.2W/8.3A	198W/5.5A	199.68W/4.16A
	CC output voltage range	/	/	18~36V	24~48V
	Voltage adjust range	Not adjustable	Not adjustable	Not adjustable	Not adjustable
	Ripple and noise	240mVp-p	300mVp-p	360mVp-p	480mVp-p
	Start up time	500ms/100ms （220VAC load 100%）,1000ms/100ms （110VAC load 80%）			
	Hold up time	8ms/（220VAC) load 100%			
	Linear adjustment rate	±0.5%	±0.5%	±0.5%	±0.5%
	Load adjustment rate	±2%	±2%	±2%	±2%
	Output Voltage Accuracy	±3%	±3%	±3%	±3%
	Output Current Accuracy	/	/	±5%	±5%
	Current ripple	/	/	3%	3%
Dimming parameter description	Voltage range on dimming	/		-10~20VDC	
	Dimming output range	/		8%Io max~100%Io max（could dimming to turn off output）	
	Dimming signal	/		0~10VDC,10V PWM signal and 0~100K resistor	
EMC	Electromagnetic tolerance	Design refer to EN61547;EN61000-4-2,3,4,5,6,8,11; (surge immunity Line-Earth 6KV, Line-Line 4KV)			
	Harmonic current	Design refer to GB17625.1;EN61000-3-2 Class C, EN61000-3-3			
	EMI	Design refer to EN55015, GB17743			
Safety	Safety specification	Design refer to GB19510.1, .14/EN61347-1, -2-13/EN62384 /UL8750/IP67			

	Withstand voltage	I/P-O/P:3.75KVac/10mA; I/P-CASE:2KVac/10mA;O/P-CASE:1.5KVac/10mA Each testing time:1min
	Insulation impedance	I/P-O/P:100M ohms; I/P-Case:100M ohms; O/P-Case:100M ohms
Protections	Over voltage	120~140% Output Voltage Overrun, Close Output Voltage, Restart
	Over load	115～135% load(CC limit),After eliminating overload, normal work can be automatically restored.
	Over temperature	Turn off the output voltage and restart
	Short circuit	Power supply protection after output short circuit ,output can be automatically restored after eliminating short circuit
Environment	Working temperature and humidity	Ta=-40~70℃/TC=-40~90℃（refer to derating curve）, 20%~95%RH no condensing
	Storage temperature and humidity	-40℃~80℃; 10%~95%RH no condensing
	Vibration	Frequency range 10 ~ 500Hz,acceleration 5G, Each sweep cycle 10min.6 sweep cycles along X, Y and Z axes
	Shock	Acceleration 20G, Duration 11mS, 3 shocks along X, Y and Z axes
	Altitude	/
	Warranty	5 years(refer to lifetime diagram)
	IP Level	IP67
Reliability	MTBF	25℃:250000Hrs, MIL-217 Method
Other requirements	Size	217*66*35.5 mm（L*W*H）
	Package	0.93Kg/pcs,16 只/box, 15KG/box
	Cooling mode	☑ Free air ☐ Fan
	Extension mode	/
Remarks	*In order to prolong the service life, it is recommended to leave 20% more allowance when configuring the load. For example, if the equipment needs 100W power, the power supply should be not less than 120W. *The ripple test method of switching power supply: 20 MHz oscilloscope is used to test the output terminal of power supply. The length of ground wire of oscilloscope probe is not more than 12 mm, and 47 uF electrolytic capacitor and 0.1 uF high frequency capacitor are input into the probe. *All electrical performance tests are performed at 25 C.	

- **Dimming operation:**

1. Connecting 0-10VDC or 10VPWM (300HZ-3KHZ) signal or a resistor (0-100K) between DIM+and DIM-can linearly adjust the value of output constant current.
2. The power supply with dimming function is recommended to connect directly to the LED, which is not suitable for external drivers.
   When the dimming function is not used, the dimming light can be suspended.

- Below is Installation sketch and dimming curve:

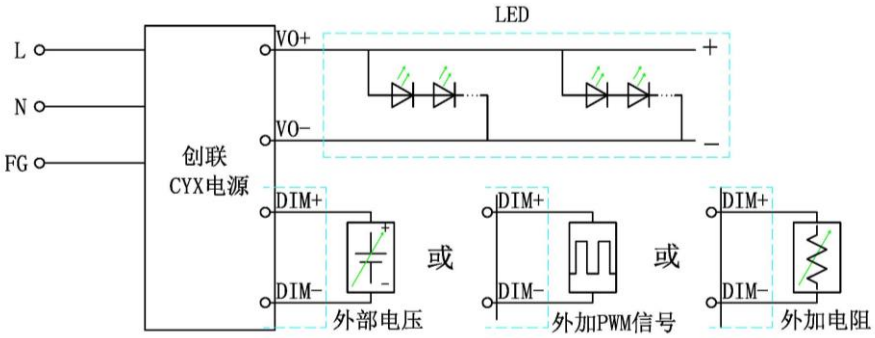

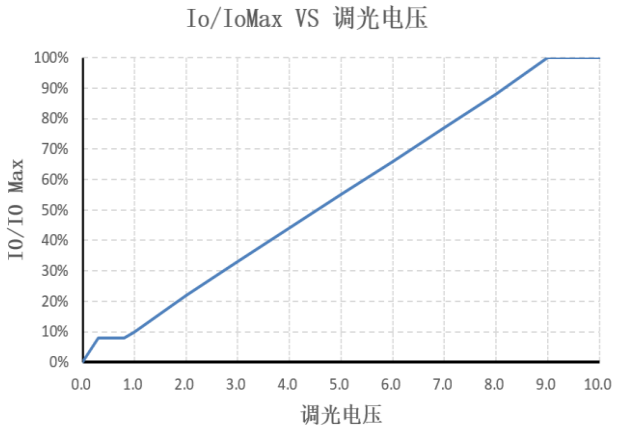

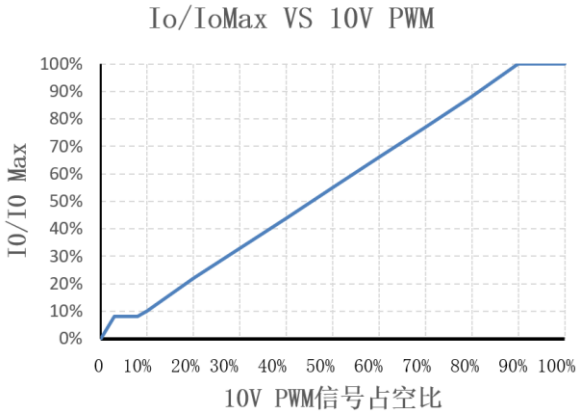

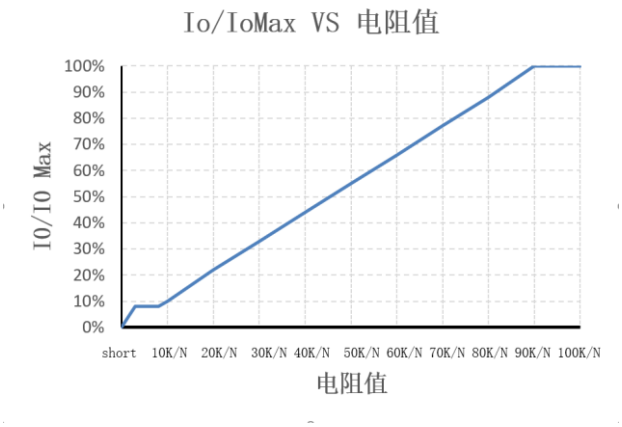

Remarks:When resistance dimming, if the dimming of N power supply needs to be used in parallel, the resistance value corresponding to the same brightness of a single power supply (output constant current value) should be divided by N.

- Output Load to Temperature Curve

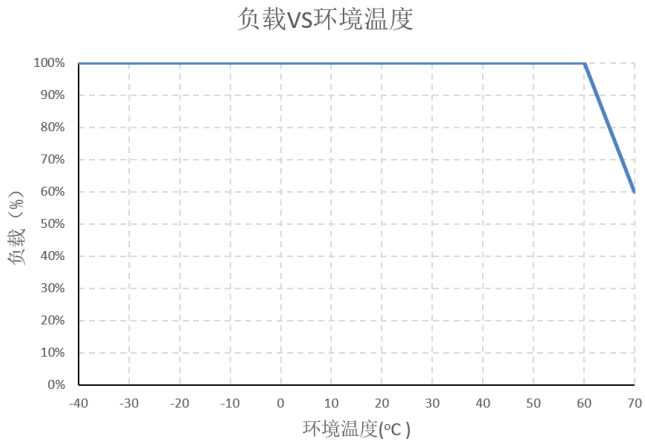

- Output Load to Input Voltage

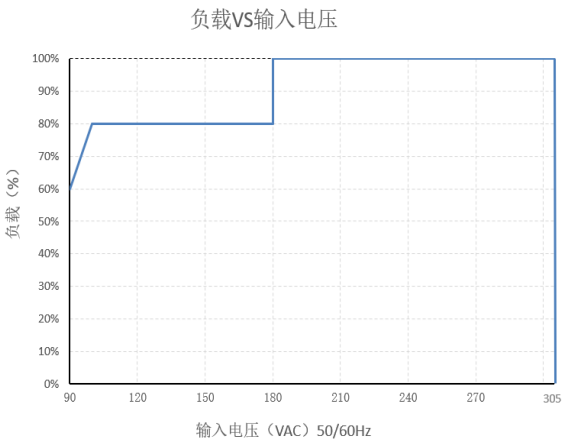

- Output load to shell temperature

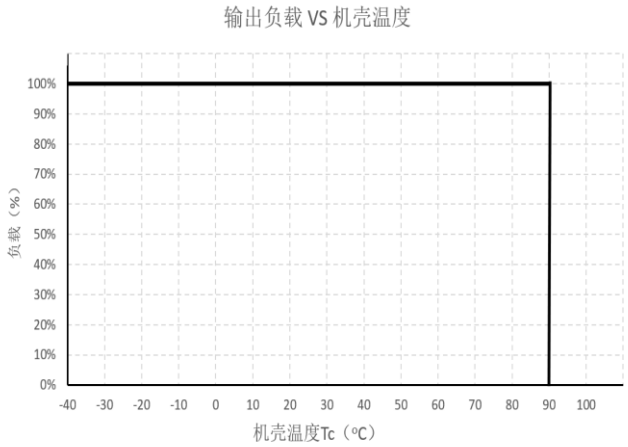

- Output load to Total Harmonic Distortion Curve (THD)

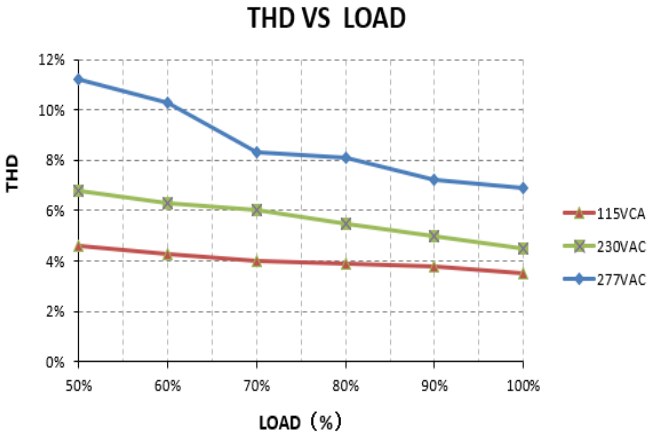

- Output load to PF

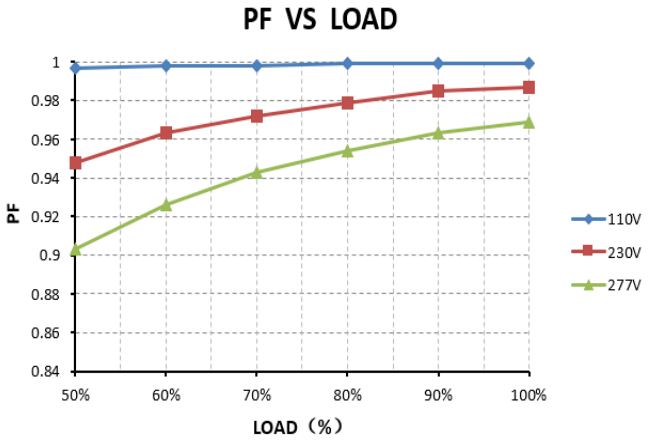

- Lifetime

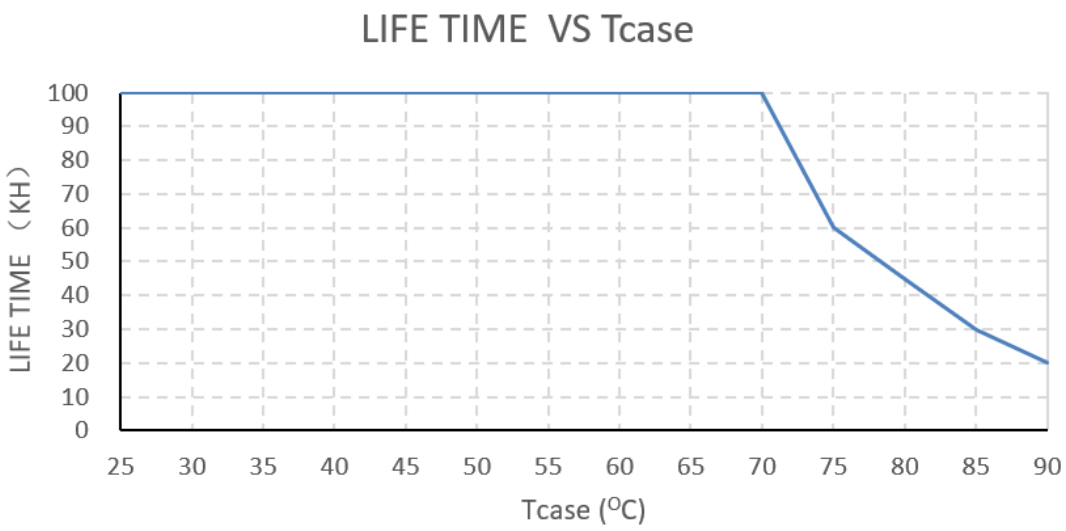

- Mechanical dimension

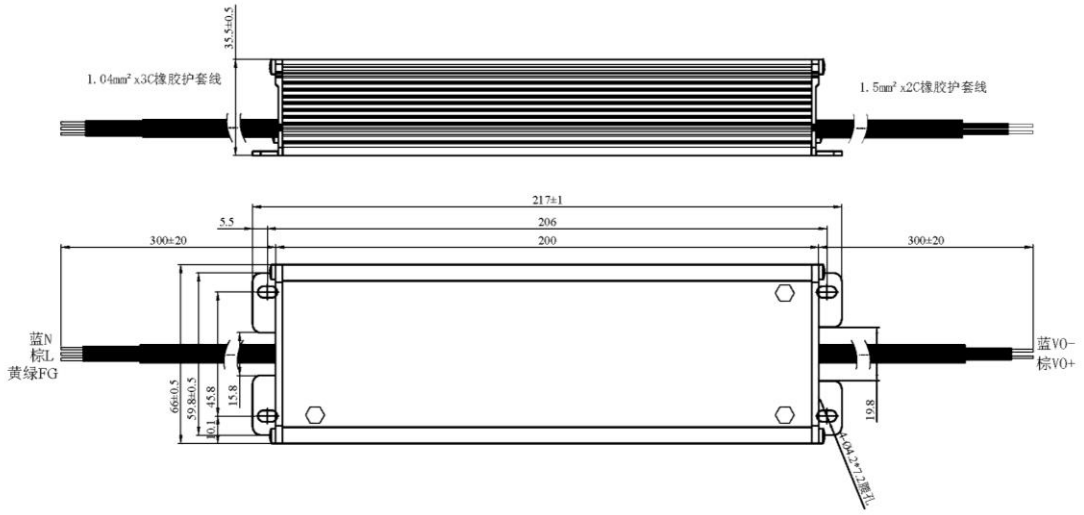

(CYX-240-12P/24P/36P/48P Product size)

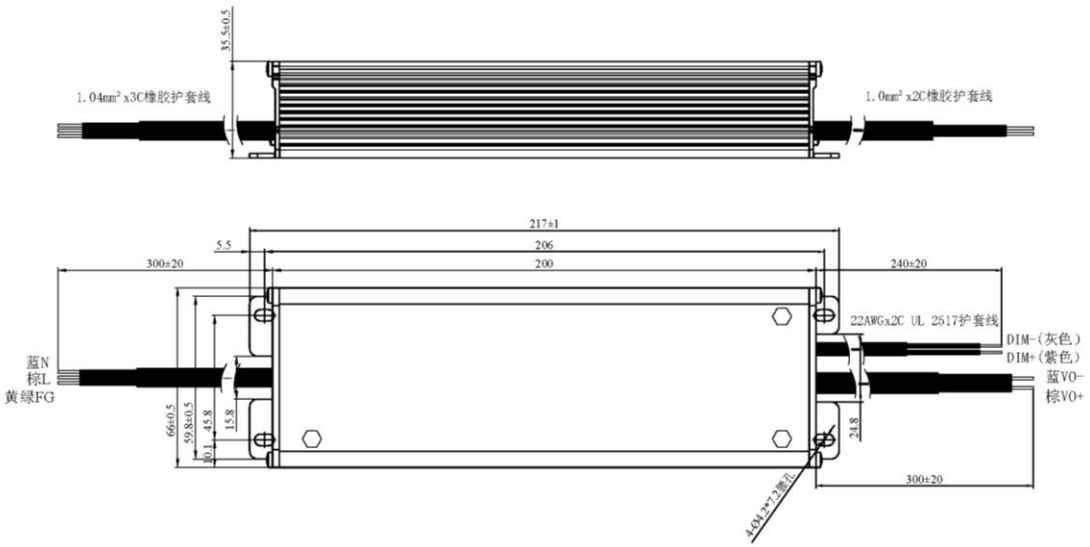

(CYX-240-36PB/48PB Product size)

● Product installation and Instructions:

1、When installing, please follow the mechanical size and installation method.

2、Before commissioning, please check and proofread the connections on the terminals to make sure that the input and output, AC and DC, positive and negative poles, voltage and current values are correct, to prevent the occurrence of reverse connection errors and to avoid damage to power supply and user equipment.

3、Please use the multimeter to measure whether the fire line, zero line and ground line are short-circuited and whether the output terminal is short-circuited before power is turned on.

4、Do not exceed the nominal value of the power supply in use, so as to avoid affecting the reliability of the product. If you need to change the output parameters of the power supply, please consult the technical department of our company before using the power supply to ensure the effectiveness and reliability of the use.

5、To ensure safety and reduce interference, ensure reliable grounding of grounding end (grounding wire>AWG18#).

6、If the power supply fails, please do not repair it without authorization. Please contact our customer service department as soon as possible. Customer service line:86-519-85210050.

● Transport and storage:

1、Transport:

This packing is suitable for transportation of automobiles, ships, airplanes and trains. It should be rainproof and handled civilly during transportation.

2、Storage:

When the product is not in use, it should be placed in the packing box. The storage environment temperature and relative humidity should meet the requirements of the product. There should be no corrosive gas or products in the warehouse, and there should be no strong mechanical vibration, impact and strong magnetic field. Packing box should be at least 20 cm high from the ground, do not allow water immersion. If the storage time is too long (more than one year), it should be re-examined by professionals before it can be used.