www.jiecang.com

JIECANG

Hand Control JCH35A18

TECHNOLOGY
DRIVES INTELLIGENT LIFE

JIECANG

Data sheet

Hand Control JCH35A18

This type of hand control face to the market of home-care bed, it is specially designed for elderly people according to their physical characteristics from the shape, colors and functions.

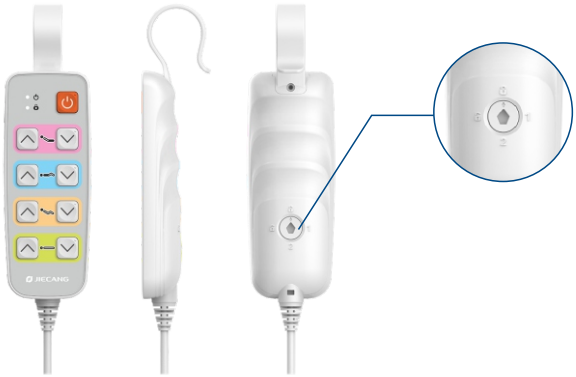

Features

- Silicone buttons
- keys are Highlighted and easy to press
- Protruding keys with small bumps for precise positioning
- The cable of hand control is pluggable and easy to replace and install
- Integrated design
- Fit the hand, not easy to slip off
- Mechanical lock on the back
- The edge of the hand control is higher than the keys to prevent misoperation
- IP Grade: IPX6

Specification

Actuator Quantity	1-4
Max. Button Number	10
Plug and Cable	Option
Color	Grey/Black
IP Grade	IPX6
Connection	All of JIECANG control boxes

Dimensions(4 rows of buttons)

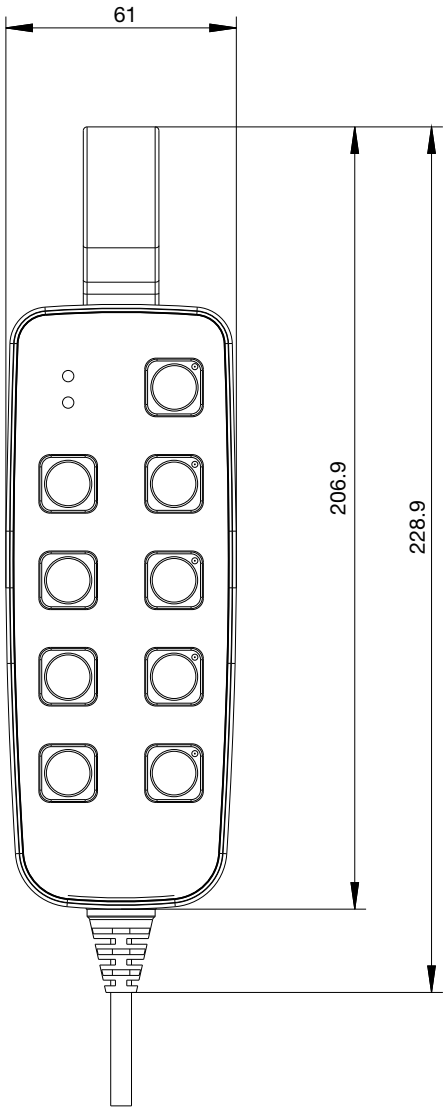

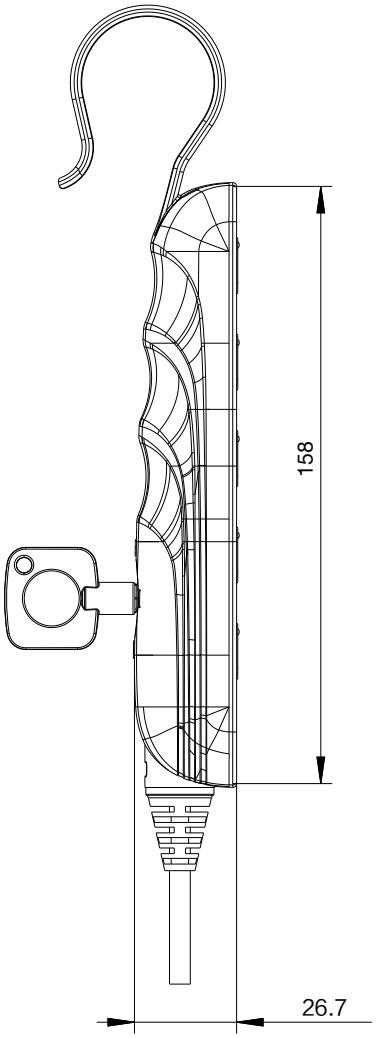

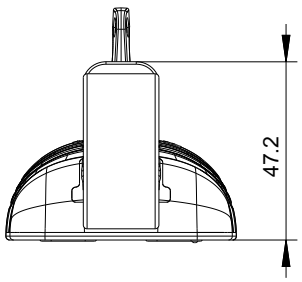

Dimensions(5 rows of buttons)

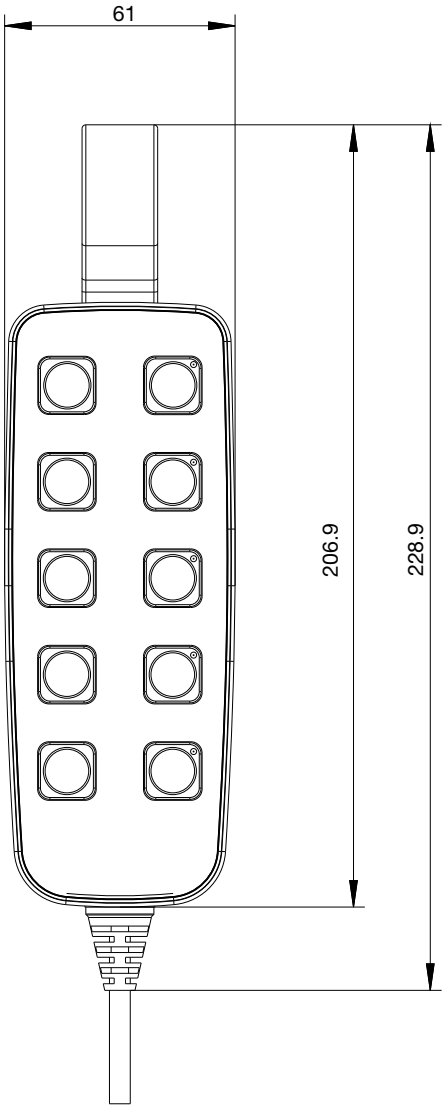

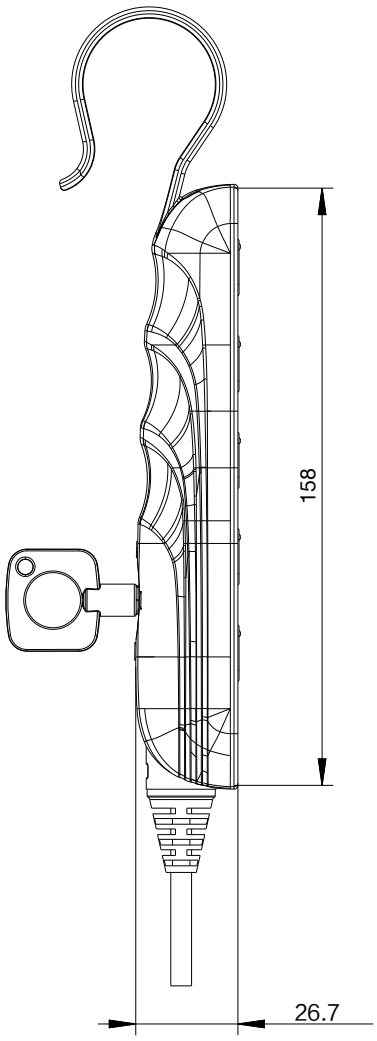

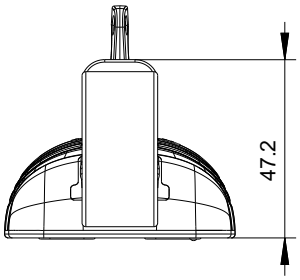

Order Key Example

JCH35A18 – B – 5 – G – 5G1 – 8L1 – 4D0 – L

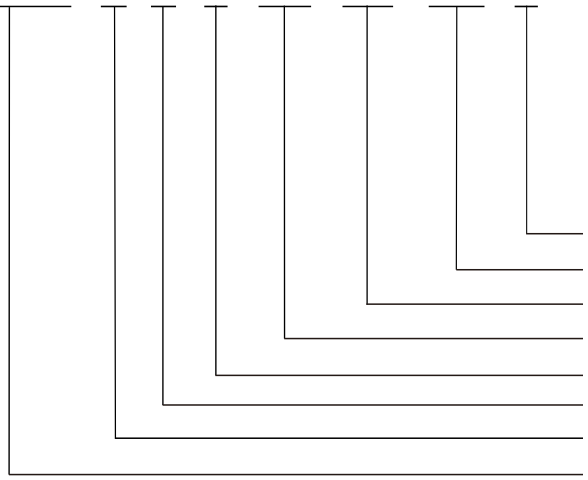

Linkage	L=Linkage 0=Independence
Cable Length	4D0=4.0M
Plug and Cable	
Panel Code	
Color	G=Grey B=Black
Button pairs	
Backlight	A:With Backlight B:Without Backlight
Type	