ANALOGUE 3-AXIS INDUSTRIAL JOYSTICK MJ-2K 0M

The 3-axis version of the MJ-2K series joystick with IP66 protection stands out through its high-precision zero return. A special lamellar gaiter seal provides the required operating reliability even in harsh environments. Analogue sensors enable high-precision control at low power consumption. Galvanized isolated directional contacts provide reliable operation on construction sites, in robotics, in mechanical and systems engineering, for construction equipment and even boats.

FEATURES

- Long service life
- Robust design
- Compact
- Conductive plastic technology

APPLICATIONS

- Aerial work platforms
- Wireless remote controls
- Forklift trucks
- Hydraulics
- Robotics
- Microscopy

ELECTRICAL SPECIFICATIONS	
Resistance value	5k Ω *
Resistance tolerance	± 20%
Deflection angle, el.	XY: > ± 19.5° ; Z: > ± 37° *
Independent linearity	± 2%
Zero position switch per axis	XY: < ± 3° open ; Z: < ± 4° open
Load capacity/axis	0,2 W at 40°C
Operating voltage (VCC)	Max. 30 VDC
Contact current	< 10 µA
Max. contact current	1 mA in case of malfunction
Insulation resistance	10 GΩ at 500 VDC
Dielectric strength	2000 V

MECHANICAL SPECIFICATIONS	
Service life	XY: 5 million cycles, Z: 3 million cycles
Deflection angle, mech.	See drawing
Operating force	XY: 5 N typically
Gate shape	Square, soft cross guide
Wiper zero position	± 1°
Impact strength	XY: 100 N / Z: 1 Nm
User control	Handle with Gaiter
Mounting	Outside mounting (0M)

AMBIENT CONDITIONS	
Storage temperature	−40°C ... +85°C
Operating temperature	−25°C ... +70°C
Protection class	IP 66

MATERIALS	
Base	Aluminium
Bearing	Stainless steel/plastic
Electrical connection	12-pin Hirose plug
Mounting	M2.5x16 with 3mm mounting plate, mounting ring. Select screw length to match plate thickness.

Specifications are subject to change without notice.
* Other values on request.

MJ-2K CP (CONDUCTIVE PLASTIC) ANALOGUE 0M			
Type Item number	MJ-2K X:0 Y:5k MC 1-0-1 0M Hirose 12-pin E060200412	Type Item number	MJ-2K XYZ: 5k MC 1-0-1 0M Hirose 12-pin E060200380
Type Item number	MJ-2K XY: 5k MC 1-0-1 0M Hirose 12-pin E060200394	Connection cable Item number	MJ-2K Hirose 12-pin (ws) LiYv 0.14mm_500mm Z301000512
Type Item number	MJ-2K XY:5k MC1-0-1 DS series IB 0M Hirose 12-pin E060200395		

© www.metallux.de 01/2014

DRAWINGS FOR MJ-2K CP XYZ OM

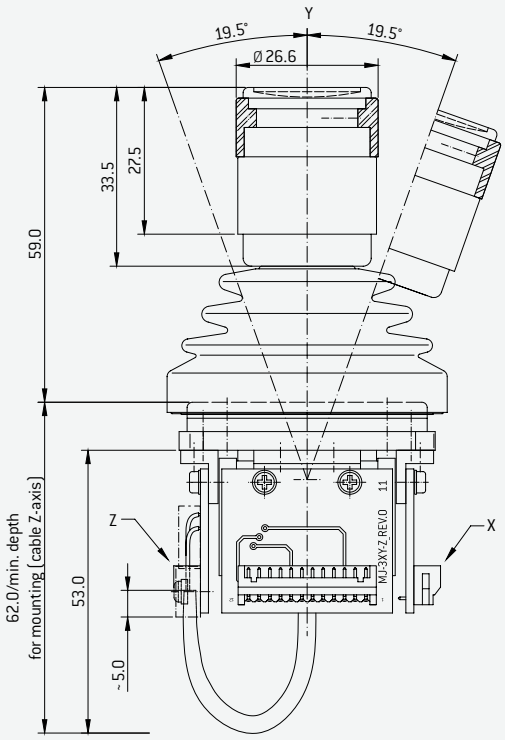

Assembly of Gaiter together with Mounting Ring
MJ-2K 4xM2,5/30x30 MLX-Art.-No.: Z404000023
If thickness of mounting panel is 3mm: Use Screw M2,5x16mm / Center Hole D=35.0

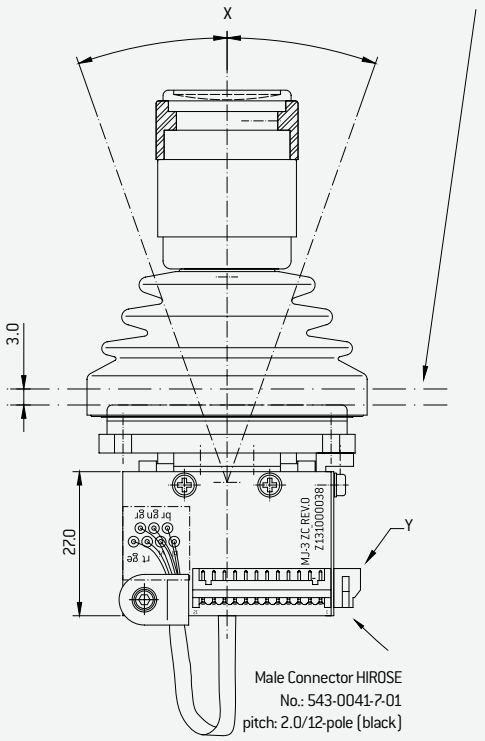

CONNECTOR PIN ASSIGNMENT / DIAGRAM

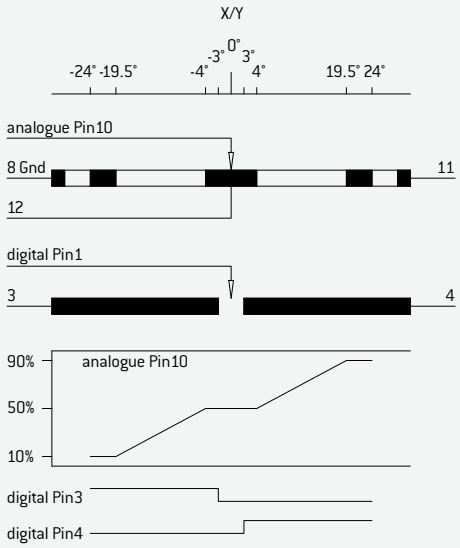

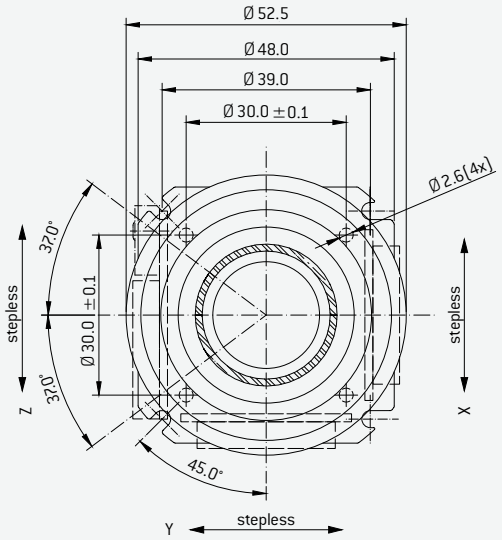

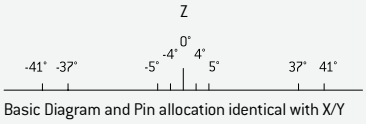

Basic Diagram and Pin allocation identical with X/Y

Connect. Resistance 5 kOhm ±20%
Analogue band 10% – 90% Utotal ±3%
Medium Voltage 50% Utotal ±2,5%
Linearity = ±2%
Contact Resistance Switch < 1 kOhm
Life CP/PCB > 5 Mio Cycles

© www.metallux.de 01/2014

MOUNTING HOLES FOR MJ-2K AND MJ-3K

Mounting, Technology and Options

MOUNTING HOLE MJ-2K OM

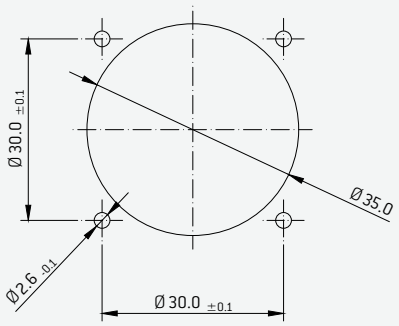

Dimension Tolerance
DIN ISO 2768-m

If thickness of mounting panel/housing is 3mm thickness, following screw is to be used: Mounting Screw Type for example: M2,5x16 DIN7985 (4x) /H/Z/TX Material: Steel galvanized/A2(stainless). Length of screw has to be changed accordingly to mounting panel/housing thickness, to avoid damages to the gaiter!

MOUNTING HOLE MJ-3K

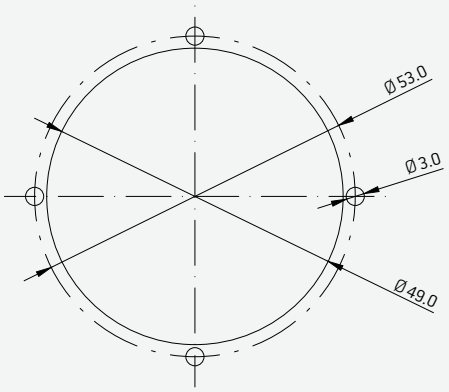

Dimension Tolerance
DIN ISO 2768-m

If thickness of mounting panel/housing is 3mm thickness, following screw is to be used: Mounting Screw Type for example: M3x10 DIN7985 (4x) /H/Z/TX Material: Steel galvanized/A2(stainless). Length of screw has to be changed accordingly to mounting panel/housing thickness.

KEY TECHNOLOGY / OPTIONS	SHORT FORM
Technology	
Conductive plastic	CP
Membrane sensor	MTP
Hall-Effect	Hall
Options	
Square platform	MJ-2K
Circular platform	MJ-3K
Grip height 55 (only MJ-3K)	55
Grip height 65 (only MJ-3K)	65
Center tap	MC
Dead man switch outside	DS series IB
Dead man switch (microswitch-inside)	DS
Cross gate	CG
Gaiter assembled from "outside" with respective mounting ring; IP 66	OM
Brake stepless – Put and Stay	BRS
Brake respective step – max. 2-0-2	BR 2-0-2
Circular deflection: 19,5°	3C
Soft control	SC
No guiding	NG

© www.metallux.de 01/2014