Eclipse® Model 700 Guided Wave Radar Level Transmitter

DESCRIPTION

The Eclipse® Model 700 Transmitter is a loop-powered, 24 VDC level transmitter that is based upon the proven and accepted technology of Guided Wave Radar (GWR). Encompassing a number of significant engineering accomplishments, this leading edge level transmitter is designed to provide measurement performance well beyond that of many of the more traditional technologies.

This single transmitter can be used in a wide variety of applications ranging from very light hydrocarbons to water-based media.

One universal Model 700 transmitter can be used and interchanged with several different probe types and offers enhanced reliability as it is certified for use in critical SIL 2/3 hardware safety loops.

The ECLIPSE Model 700 supports both the FDT/DTM and Enhanced DD (EDDL) standards, which allow viewing of valuable configuration and diagnostic information such as the echo curve in tools such as PACT*ware*™, AMS Device Manager, and various HART® Field Communicators.

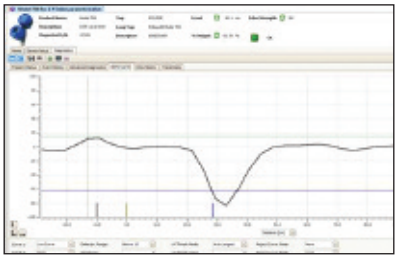

Eclipse® Model 700 DTM

Measures Level, Interface, Volume, and Flow

APPLICATIONS

MEDIA: Liquids, solids, or slurries; hydrocarbons to water-based media (Dielectric Constant ε_r = 1.2–100)

VESSELS: Most process or storage vessels up to rated probe temperature and pressure.

CONDITIONS: All level measurement and control applications including process conditions exhibiting visible vapors, foam, surface agitation, bubbling or boiling, high fill/empty rates, low level and varying dielectric media or specific gravity.

FEATURES

- Multivariable, two-wire, 24 VDC loop-powered transmitter for level, interface, volume, or flow.
- Level measurement not affected by changing media characteristics.
- No need to move levels for calibration.
- Overfill Capable probes allow for "true level" measurement all the way up to the process seal, without the need for special algorithms.
- 4-button keypad and graphic LCD display allow for convenient viewing of configuration parameters and echo curve.
- Proactive diagnostics advise not only what is wrong, but also offer troubleshooting tips.
- Nine common tank shapes for volumetric output.
- 30-point custom strapping table for uncommonly-shaped tanks.
- Two standard flumes and four standard weirs of various sizes for flow measurement.
- Generic flow equation for non-standard channels.
- Probe designs up to +400 °F/6250 psi (+200 °C/431 bar).
- Cryogenic applications down to -320 °F (-196 °C).
- SIL certification allows use in SIL 2/3 Loops
- No moving parts.

TECHNOLOGY

PRINCIPLE OF OPERATION

ECLIPSE Guided Wave Radar is based upon the technology of TDR (Time Domain Reflectometry). TDR utilizes pulses of electromagnetic energy transmitted down a wave guide (probe). When a pulse reaches a surface that has a higher dielectric constant than the air ($\varepsilon_r = 1$) in which it is traveling, a portion of the pulse is reflected. The transit time of the pulse is then measured via high speed timing circuitry that provides an accurate measure of the liquid (or solids) level. The amplitude of the reflection depends on the dielectric constant of the product. The higher the dielectric constant, the larger is the reflection.

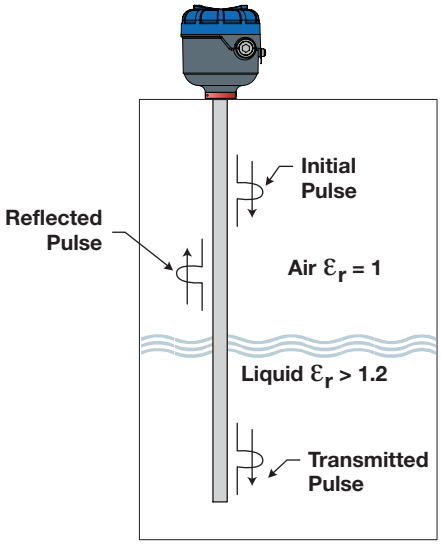

Overall Liquid Level

INTERFACE MEASUREMENT

The ECLIPSE Model 700 is capable of measuring both an upper liquid level and an interface liquid level. As only a portion of the pulse is reflected from a low dielectric upper surface, some of the transmitted energy continues down the GWR probe through the upper liquid. The remaining initial pulse is again reflected when it reaches the higher dielectric lower liquid. It is required that the upper liquid has a dielectric constant less than 10, and the lower liquid has a dielectric constant greater than 15. A typical interface application would be oil over water, with the upper layer of oil being non-conductive ($\varepsilon_r \approx 2.0$), and the lower layer of water being very conductive ($\varepsilon_r \approx 80$). The thickness of the upper layer could be as small as 2" (50 mm) while the maximum upper layer is limited to the length of the GWR probe.

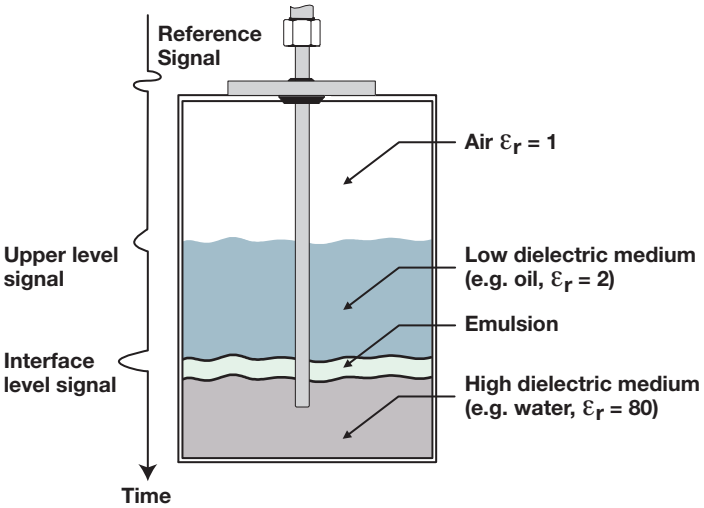

Interface Level

SPECIAL APPLICATIONS

EMULSION LAYERS

As emulsion layers, also called "rag layers," can decrease the strength of the reflected signal in an interface application, GWR transmitters are typically recommended for applications that have clean, distinct layers.

However, the ECLIPSE Model 700, with its powerful internal measurement algorithms, will tend to detect the top of an emulsion layer.

Contact the factory for application assistance regarding emulsion layers in your specific application.

OVERFILL CAPABILITY

Although agencies like WHG or VLAREM certify **Overfill proof** protection, defined as the tested, reliable operation when the transmitter is used as overfill alarm, it is assumed in their analysis that the installation is designed in such a way that the vessel or side mounted cage cannot physically overfill.

However, there are practical applications where a GWR probe can be completely flooded with level all the way up to the process connection (face of the flange). Although the affected areas are application dependent, typical GWR probes have a transition zone (or possibly dead zone) at the top of the probe where interacting signals can either affect the linearity of the measurement or, more dramatically, result in a complete loss of signal.

While some manufacturers of GWR transmitters may use special algorithms to "infer" level measurement when this undesirable signal interaction occurs and the actual level signal is lost, the ECLIPSE Model 700 offers a unique solution by utilizing a concept called **Overfill Safe Operation**.

An **Overfill safe probe** is defined by the fact that it has a predictable and uniform characteristic impedance all the way down the entire length of the waveguide (probe). These probes allow the ECLIPSE Model 700 to measure accurate levels up to the process flange without any non-measurable zone at the top of the GWR probe.

Overfill safe GWR probes are unique to ECLIPSE GWR, and coaxial probes can be installed at any location on the vessel. Overfill safe probes are offered in several coaxial designs.

PROBE OVERVIEW

Choosing the proper Guided Wave Radar (GWR) probe is the most important decision in the application process. The probe configuration establishes fundamental performance characteristics.

ECLIPSE Model 700 probes can be described by two basic configurations:

- Coaxial
- Single element (rigid rod or flexible cable)

Both of these probe configurations has specific strengths and weaknesses. Although there can be overlap, and different probes can certainly be used in similar applications, it is important to understand their basic differences so that one can choose the probe type that will offer optimal performance.

The descriptions that follow are facts relating to the physics of GWR technology and are not specific to the ECLIPSE Model 700.

COAXIAL PROBES

The coaxial probe is the most efficient of all GWR probe configurations and should be the first consideration in all applications. Analogous to the efficiency of coaxial cable, a coaxial probe allows almost unimpeded movement of the high frequency pulses throughout its length.

The electromagnetic field that develops between the inner rod and outer tube is completely contained and uniform down the entire length of the probe. See figure below. The result is a probe that is immune to any proximity affects from other objects in the vessel, and therefore, in essence, it can be used anywhere that it can mechanically fit.

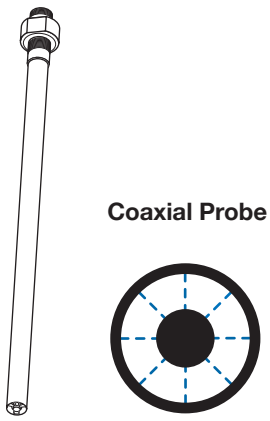

The efficiency and overall sensitivity of a coaxial configuration yields robust signal strength, even in extremely low dielectric ($\varepsilon_r \geq 1.4$) applications. The sensitivity of this "closed" design, however, also makes it more susceptible to measurement error in applications that can have coating and buildup.

All ECLIPSE Model 700 coaxial probes are Overfill Safe as standard, by design.

BASIC–FOR CLEAN LIQUIDS

The basic 0.875" (22.5 mm) diameter coaxial GWR probe is only recommended for use in clean applications. Teflon®, PEEK, or alumina spacers centering the inner rod within the outer tube are located at 24" (60 cm) intervals, resulting in a perfect characteristic impedance along the entire length of the probe.

This probe is recommended in applications with viscosities up to 500 cP (mPa.s) maximum.

ENLARGED–FOR DIFFICULT LIQUIDS

The Enlarged 1.75" (45 mm) diameter coaxial GWR probes can be generally used for most applications. They can be installed directly into the tank as well as into bypass cages, stillwells or bridles.

The robust construction reduces the number of spacers required, allowing the probe to be used in applications where higher risk of buildup exists. To further reduce the possibility of media buildup, the use of a single bottom spacer is recommended up to probe lengths of 100 inches (2.54 meters). The overall sensitivity and performance of an enlarged coaxial GWR probe is identical to a standard coaxial GWR probe, but it offers the very important advantage that it can be used in applications with viscosities up to 2,000 cP (mPa.s).

OPTIONAL FLUSHING CONNECTION

The maintenance of coaxial GWR probes in applications suffering from buildup or crystallization can be significantly improved by using an optional flushing connection. This flushing connection is a metal extension with a port welded above the process connection. The port allows the user to purge the inside of the coaxial GWR probe during routine maintenance.

Note: The best approach to eliminate the effects of condensation or crystallization is to install adequate insulation or heat tracing (steam or electrical). A flushing connection is no substitute for proper maintenance, but will help to reduce the frequency of the intervention.

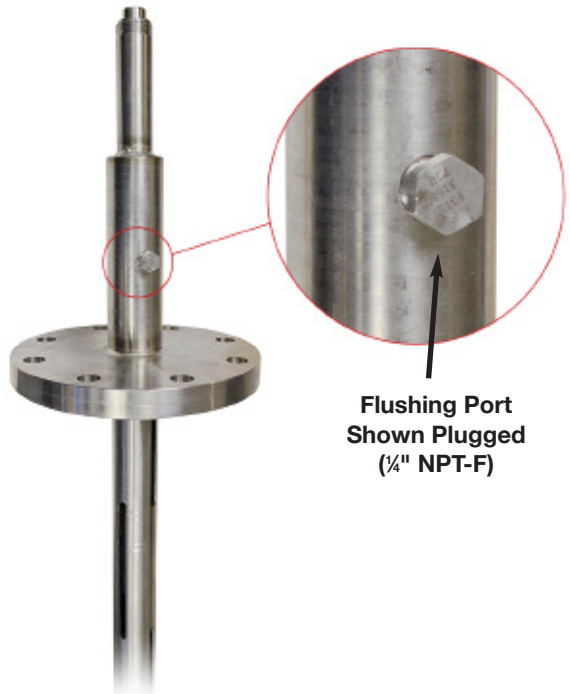

SINGLE ROD PROBES

Single element GWR probes act quite differently than the coaxial design. With only one conductor to work with, the pulses of energy develop between the single rod probe and the mounting nut or flange. In other words, the pulse propagates down and around the rod as it references its ground at the top of the tank.

The energy and efficiency of the pulse are directly related to how much metallic surface exists around it at the top of the vessel. This metallic surface at the top of the probe is called the "launch plate." The larger the launch plate, the more efficient the signal propagation down the probe.

The figure at right shows the single element design and how the electromagnetic pulse effectively expands into a teardrop shape as it propagates away from the top of the tank (the inherent ground reference). This single element configuration (rod or cable) is less efficient, but can still operate with a minimum dielectric detection of approximately $\varepsilon_r > 1.7$ in an open, non-metallic vessel.

However, this dielectric constant performance improves considerably ($\varepsilon_r > 1.4$) when the single rod probe is installed in a metal cage/bridle, or mounted 2–6" (50–150 mm) away from a metal tank wall. Because the design is "open," it exhibits two strong tendencies:

- It is the most forgiving of coating and buildup. (The PFA-insulated probe is the best choice for severe buildup and coating).
- It is most affected by proximity issues.

It is important to note that a parallel metal wall INCREASES the performance of a single rod probe while a singular, metal object protruding out near the probe may be improperly detected as a liquid level. These tendencies are application/installation dependent.

Contact the factory for additional support and questions.

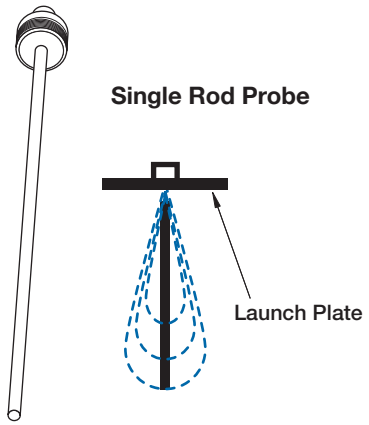

PROBE SELECTION GUIDE

COAXIAL/CAGED GWR PROBE

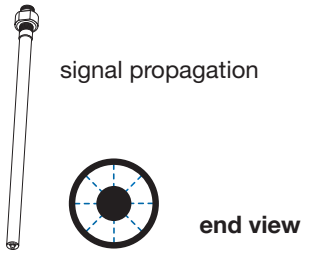

SINGLE ROD/CABLE PROBE

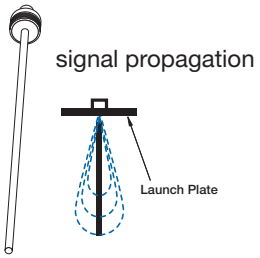

GWR Probe①	Description	Application	Installation	Dielectric Range ②③	Temperature Range	Max. Pressure	Vacuum ④	Overfill Safe	Viscosity cP (mPa.s)
Coaxial GWR Probes—Liquids									
7zT	Standard Temperature	Level/Interface	Tank/Chamber	ε_r 1.4–100	-40 to +400 °F (-40 to +200 °C)	1000 psi (70 bar)	Yes	Yes	500/2000
7zP	High Pressure	Level/Interface	Tank/Chamber	ε_r 1.4–100	-320 to +400 °F (-196 to +200 °C)	6250 psi (431 bar)	Full	Yes	500/2000
Single Rod Rigid GWR Probes—Liquids									
7zF	Standard Temperature	Level	Tank	ε_r 1.4–100	-40 to +400° F (-40 to +200° C)	1000 psi (70 bar)	Yes	No ⑤	10000
Single Cable Flexible GWR Probes—Liquids									
7z1	Standard Temperature	Level	Tank	ε_r 1.4–100	-40 to +400 °F (-40 to +200 °C)	1000 psi (70 bar)	Yes	No ⑤	10000

① 2nd digit B=English, D=Metric
② Minimum ε_r 1.2 with end of probe analysis enabled.
③ Single rod probes mounted directly into the vessel must be within 3–6 inches of metal tank wall to obtain minimum dielectric of 1.4, otherwise ε_r min = 1.7.
④ ECLIPSE probes containing o-rings can be used for vacuum (negative pressure) service, but only those probes with glass seals are hermetically sealed to $<10^{-8}$ cc/sec @ 1 atmosphere helium.
⑤ Overfill capability can be achieved with software.

TRANSMITTER SPECIFICATIONS

FUNCTIONAL/PHYSICAL

System Design		
Measurement Principle		Guided Wave Radar based on Time Domain Reflectometry (TDR)
Input		
Measured Variable		Level, as determined by GWR time of flight
Span		6 inches to 100 feet (15 cm to 30 m)
Output		
Type		4 to 20 mA with HART: 3.8 mA to 20.5 mA useable (per NAMUR NE43)
Resolution	Analog:	.003 mA
	Digital Display:	1 mm
Loop Resistance		590 ohms @ 24 VDC and 22 mA
Diagnostic Alarm		Selectable: 3.6 mA, 22 mA (meets requirements of NAMUR NE 43), or HOLD last output
Diagnostic Indication		Meets requirements of NAMUR NE107
Damping		Adjustable 0–10 seconds
User Interface		
Keypad		4-button menu-driven data entry
Display		Graphic liquid crystal display
Digital Communication/Systems		HART Version 7—with Field Communicator, AMS, or FDT
		DTM (PACT*ware*™), EDDL
Menu Languages	Transmitter LCD:	English, French, German, Spanish, Russian
	HART DD:	English, French, German, Spanish, Russian, Chinese, Portuguese, Polish
Power (at transmitter terminals)		11 VDC minimum under certain conditions (refer to I&O Manual 57-660)
Housing		
Material		IP67/die-cast aluminum A413 (<0.6% copper); optional stainless steel
Net/Gross Weight	Aluminum:	4 lbs. (1.8 kg)
Overall Dimensions		H 5.41" (137 mm) x W 4.86" (123 mm) x D 4.55" (116 mm)
Cable Entry		½" NPT or M20
SIL 2/3 Capable (Certified)		Safe Failure Fraction = 92.4% (HART only)
		Functional Safety to SIL 2/3 in accordance with IEC 61508
Environment		
Operating Temperature		-40 to +175 °F (-40 to +80 °C); LCD viewable -5 to +160 °F (-20 to +70 °C)
Storage Temperature		-50 to +185 °F (-45 to +85 °C)
Humidity		0 to 99%, non-condensing
Electromagnetic Compatibility ①		Meets CE requirement (EN 61326) and NAMUR NE 21 ①
Surge Protection		Meets CE EN 61326 (1000V)
Shock/Vibration		ANSI/ISA-S71.03 Class SA1 (Shock); ANSI/ISA-S71.03 Class VC2 (Vibration)

① Single rod probes must be used in metallic vessel or stillwell to maintain CE noise immunity.

FUNCTIONAL/PHYSICAL

Performance

Reference Conditions ①		Reflection from liquid, with dielectric constant in center of selected range, with a 72" (1.8 m) coaxial probe at +70 °F (+20 °C), in Auto Largest Threshold Mode
Linearity ②	Coaxial Probes:	<0.1% of probe length or 0.1 inch (2.5 mm), whichever is greater
	Single Rod/Cable:	<0.3% of probe length or 0.3 inch (7.5 mm), whichever is greater
Accuracy	Coaxial:	±0.1% of probe length or ±0.1 inch (2.5 mm), whichever is greater
	Single Rod/Cable:	±0.5% of probe length or ±0.5 inch (13 mm), whichever is greater
	Interface Operation:	Coaxial: ±1 inch (25 mm) for an interface thickness greater than 2 inches (50 mm)
Resolution		±0.1 inch or 1 mm
Repeatability		<0.1 inch (2.5 mm)
Hysteresis		<0.1 inch (2.5 mm)
Response Time		Approximately 1 second
Initialization Time		Less than 10 seconds
Ambient Temperature Effect		Approx. ±0.02% of probe length/degree C (for probes greater than 8 feet (2.5 m))
Process Dielectric		<0.3 inch (7.5 mm) within selected range

① Specifications will degrade in Fixed Threshold mode.
② Linearity in top 18 inches (46 cm) of twin cable and single rod probes in tanks will be application dependent.

COAXIAL PROBE MATRIX

	7zT	7zP
Description	Standard Temperature	High Pressure
Application	Level/Interface	Level/Interface
Installation	Tank/Chamber	Tank/Chamber
Overfill Safe	Yes	Yes
Materials — Probe	316/316L (1.4401/1.4404)	316/316L (1.4401/1.4404)
Process Seal	Teflon® TFE with Viton® o-rings ①	Hermetic Glass Ceramic, Inconel
Spacers	Teflon® TFE	Teflon® TFE
Probe Outside Diameter		
Enlarged	316 SS: 1.75" (45 mm)	316 SS: 1.75" (45 mm)
Basic	0.87" (22.5 mm)	0.87" (22.5 mm)
Process Connection		
Threaded	¾" NPT or 1" BSP Enlarged 2" NPT	¾" NPT or 1" BSP Enlarged 2" NPT
Flanged	Various ASME and proprietary, EN1092	Various ASME and proprietary, EN1092
Available Probe Length	12 to 240 inches (30 to 610 cm)	12 to 240 inches (30 to 610 cm)
Transition Zones ②		
Top	0 inches (0 mm)	0 inches (0 mm)
Bottom	ε_r = 1.4: 6 inches (150 mm) ⑤, ε_r = 80: 2 inches (50 mm)	ε_r = 1.4: 6 inches (150 mm) ⑤, ε_r = 80: 2 inches (50 mm)
Process Temperature	-40 to +400 °F (-40 to +200 °C)	-320 to +400 °F (-196 to +200 °C)
Max. Process Pressure ③	1000 psi @ +70 °F (70 bar @ +20 °C)	6250 psi @ +70°F (431 bar @ +20°C)
Dielectric Range	1.4 to 100 ⑥	1.4 to 100 ⑥
Vacuum Service ④	Negative Pressure, but no hermetic seal	Full Vacuum
Viscosity		
Enlarged	2000cP (mPa.s)	2000cP (mPa.s)
Basic	500cP (mPa.s)	500cP (mPa.s)
Media Coating	Filming	Filming

① Other o-ring materials available upon request.
② Transition zones (areas with reduced accuracy) are dielectric dependent. It is recommended to set the 0-100% measuring range outside of the transition zones.
③ Refer to chart on page 10.
④ ECLIPSE probes containing o-rings can be used for vacuum (negative pressure) service, but only those probes with glass seal are hermetically sealed to $<10^{-8}$ cc/sec @ 1 atmosphere helium.
⑤ Can be reduced to 3" (75 mm) when lower accuracy is acceptable.
⑥ 1.2 minimum dielectric when end of probe analysis is enabled.

SINGLE ROD RIGID PROBE MATRIX

	7zF
Description	Standard Temperature
Application	Level
Installation	Tank/Chamber
Overfill Safe ⑦	No
Materials — Probe	316/316L (1.4401/1.4404) PFA Insulated 316/316L rod
Process Seal	Teflon® TFE with Viton® o-rings①
Spacers	None
Probe Outside Diameter	Bare: 0.38" (10 mm) rod Coated: 0.625" (16 mm) rod
Process Connection **Threaded** **Flanged**	 1" or 2" (NPT or BSP) Various ASME, EN1092
Available Probe Length	24 to 240 inches (60 to 610 cm)
Transition Zones ② **Top** **Bottom**	 Application Dependent ε_r = 1.4: 6 inches (150 mm) ⑤, ε_r = 80: 2 inches (50 mm)
Process Temperature	-40 to +400 °F (-40 to +200 °C)
Max. Process Pressure ③	1000 psi @ +70 °F (70 bar @ +20 °C)
Dielectric Range	1.4 to 100 ⑥
Vacuum Service ④	Negative Pressure, but no hermetic seal
Viscosity	10,000cP (mPa.s)
Media Coating	Maximum Error 10% of coated length (% Error is dependent on dielectric and thickness)

① Other o-ring materials available upon request.
② Transition zones (areas with reduced accuracy) are dielectric dependent. It is recommended to set the 0-100% measuring range outside of the transition zones.
③ Refer to chart on page 10.
④ ECLIPSE probes containing o-rings can be used for vacuum (negative pressure) service, but only those probes with glass seal are hermetically sealed to $<10^{-8}$ cc/sec @ 1 atmosphere helium.
⑤ Can be reduced to 3" (75 mm) when lower accuracy is acceptable.
⑥ 1.2 minimum dielectric when end of probe analysis is enabled.
⑦ Overfill capability can be achieved with software.

SINGLE CABLE FLEXIBLE PROBE MATRIX

	7z1
Description	Single Flexible Standard Temperature
Application	Level
Installation	Tank
Overfill Safe ⑥	No
Materials — Cable	316 (1.4401) (optional PFA coating)
Process Seal	Teflon® TFE with Viton® o-rings①
Probe Outside Diameter	0.19 inches (5 mm)
Process Connection **Threaded** **Flanged**	 1" NPT or 2" BSP Various ASME, EN1092, and proprietary flanges
Available Probe Length	3 to 100 feet (1 to 30 meters)
Transition Zones ② **Top** **Bottom**	 12 inches (30 cm) 12 inches (30 cm)
Process Temperature	-40 to +400 °F (-40 to +200 °C)
Max. Process Pressure ③	1000 psi @ +70 °F (70 bar @ +20 °C)
Dielectric Range ⑤	1.7 to 100
Vacuum Service ④	Negative Pressure, but no hermetic seal
Viscosity	10,000 (mPa.s)
Media Coating	Maximum Error 10% of coated length (% Error is dependent on dielectric and thickness)

① Other o-ring materials available upon request.
② Transition zones (areas with reduced accuracy) are dielectric dependent. It is recommended to set the 0-100% measuring range outside of the transition zones.
③ Refer to chart on page 10.
④ ECLIPSE probes containing o-rings can be used for vacuum (negative pressure) service, but only those probes with glass seal are hermetically sealed to $<10^{-8}$ cc/sec @ 1 atmosphere helium.
⑤ 1.2 minimum dielectric when end of probe analysis is enabled.
⑥ Overfill capability can be achieved with software.

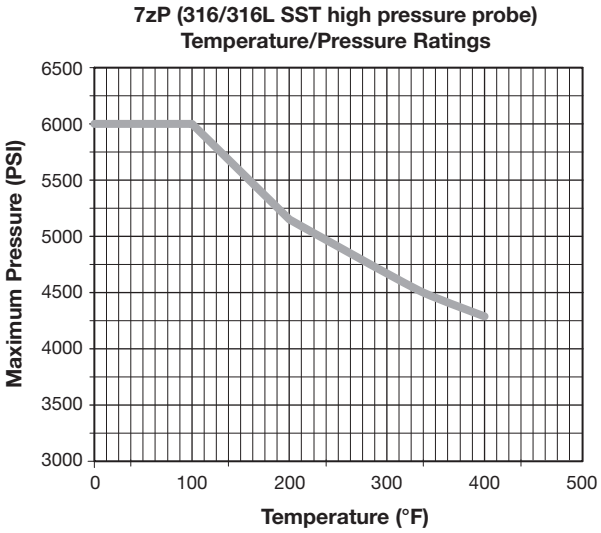

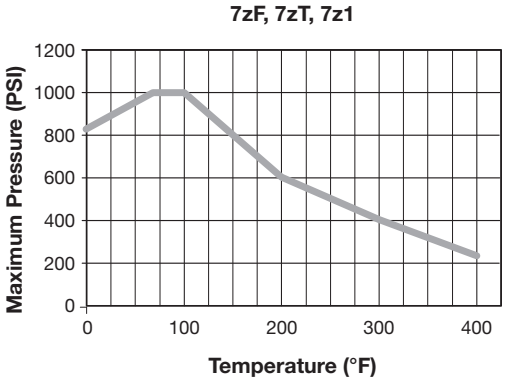

High Pressure Probes		Low Pressure
Temp.	SST	All Materi-
-40	6000	750
+70	6000	1000
+100	6000	1000
+200	5160	650
+300	4660	400
+400	4280	270

- 7zP with threaded fittings have 3600 psi (248 bar) rating.
- Maximum pressure for 1" NPT or 1" BSP: 316 SST probe: 139 bar (2016 psi)
- Maximum pressure for 2" NPT or 2" BSP: 316 SST probe: 414 bar (6000 psi)

MAGNETROL CHAMBERS

A brief description of the MAGNETROL chamber offering follows. For more details, refer to bulletin 41-140.

MAGNETROL has a long tradition in offering cost-effective chambers. The MAGNETROL external chamber is a self-contained cage designed for use with our top mounting level transmitters or switches. Quality construction and a wide selection of configurations make this cage an ideal means of utilizing the power of Guided Wave Radar without mounting directly into the process vessel.

MAGNETROL chambers are available with a wide variety of options, and can be manufactured to comply with various regulations such as:

- Commercial Design
- ASME B31.1 Design Code
- ASME B31.3 Design Code
- NACE Design Code
- PED

Some Model 700 probes can be installed into chambers as small as 2". When a new chamber is required, it can be ordered together with a factory pre-configured Model 700 for a true “plug and play” installation.

For example:

A standard Model 700-511A-310 explosion-proof transmitter with a Model 7BF-4300-A00-00-021 single rod probe can be used in a 2" chamber. An example of a typical chamber model number is:

F21-4A2D-014

Refer to bulletin 41-140 for details on chamber model numbers and additional options.

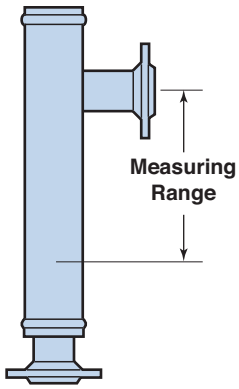

Sealed Chamber

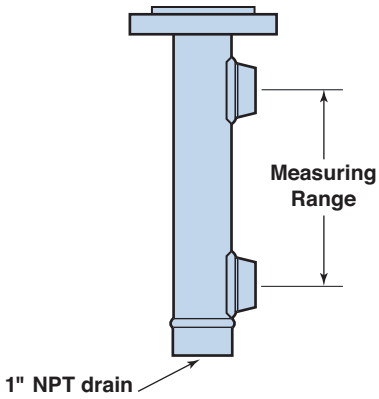

Slip-on head flange

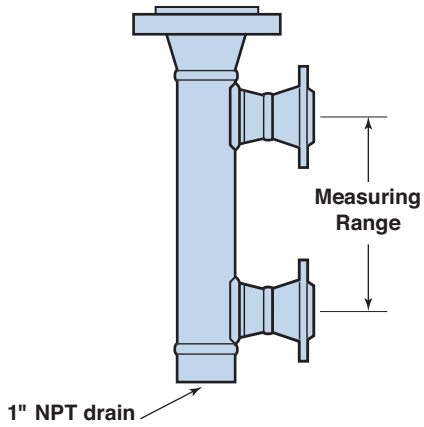

Weld neck head flange

O-RING/SEAL SPECIFICATIONS

Code	O-Ring/Seal Material	Max. Process Temperature	Min. Process Temperature	Max. Process Pressure	Not Recommended For Applications	Recommended for Applications
0	**Viton® GFLT**	400 °F @ 230 psi (200 °C @ 16 bar)	-40 °F (-40 °C)	1000 psi 70 °F (70 bar @ 20 °C)	Ketones (MEK, acetone), skydrol fluids, amines, anhydrous ammonia, low molecular weight esters and ethers, hot hydrofluoric or chlorosulfuric acids, sour HCs	General purpose, ethylene
2	**Kalrez® 4079**	400 °F @ 232 psi (200 °C @ 16 bar)	-40 °F (-40 °C)	1000 psi 70 °F (70 bar @ 20 °C)	Hot water/steam, hot aliphatic amines, ethylene oxide, propylene oxide	Inorganic and organic acids (including hydro fluids and nitric), aldehydes, ethylene, organic oils, glycols, silicone oils, vinegar, sour HCs
8	**Simriz SZ485** (formerly Aegis PF128) ①	400 °F @ 232 psi (200 °C @ 16 bar)	-4 °F (-20 °C)	1000 psi 70 °F (70 bar @ 20 °C)	Black liquor, freon 43, freon 75, galden, KEL-F liquid, molten potassium, molten sodium	Inorganic and organic acids (including hydro fluids and nitric), aldehydes, ethylene, organic oils, glycols, silicone oils, vinegar, sour HCs, steam, amines, ethylene oxide, propylene oxide, NACE applications
A	**Kalrez® 6375**	400 °F @ 232 psi (200 °C @ 16 bar)	-40 °F (-40 °C)	1000 psi 70 °F (70 bar @ 20 °C)	Hot water/steam, hot aliphatic amines	Inorganic and organic acids (including hydro fluids and nitric), aldehydes, ethylene, organic oils, glycols, silicone oils, vinegar, sour HCs. ethylene oxide, propylene oxide
D or N	**Glass Ceramic Alloy**	850 °F @ 3600 psi (450 °C @ 248 bar)	-320 °F (-195 °C)	6250 psi 70 °F (431 bar @ 20 °C)	Hot alkaline solutions HF acid, media with ph>12, direct exposure to saturated steam	General high temperature/high pressure applications, hydrocarbons, full vacuum (hermetic), ammonia, chlorine

① Maximum +300 °F (+150 °C) for use on steam.

AGENCY APPROVALS

These units are in compliance with the EMC-directive 2014/30/EU, the PED-directive 2014/68/EU and the ATEX directive 2014/34/EU.

Intrinsically Safe	Non- Incendive
US: FM19US0182X Class I, II, III, Div 1, Group A, B, C, D, E, F, G, T4...T1 Class I, Zone 0 AEx ia IIC T4...T1 Ga Ta =-40ºC to + 70ºC Type 4X, IP66/67	**US: FM19US0182X** Class I, II, III, Div 2, Group A, B, C, D, E, F, G, T4...T1 Class I, Zone 2 AEx nA IIC T4...T1 Gc Ta =-15ºC to + 70ºC Type 4X, IP66/67
Canada: FM19CA0094X Class I, II, III, Div 1, Group A, B, C, D, E, F, G, T4...T1 Zone 0, Ex ia IIC T4...T1 Ga Ta =-40ºC to + 70ºC Type 4X, IP66/67	**Canada: FM19CA0094X** Class I, II, III, Div 2, Group A, B, C, D, E, F, G, T4...T1 Zone 2, Ex nA IIC T4...T1 Gc Ta =-15ºC to + 70ºC Type 4X, IP66/67
ATEX – FM19ATEX0197X: II 1 G Ex ia IIC T4 Ga Ta = -40ºC to +70ºC IP 66/67	**ATEX – FM19ATEX0199X:** II 3 G Ex nA IIC T4...T1 Gc Ta = -15ºC to +70ºC IP 66/67
IEC – IECEx FMG 19.0037X: Ex ia IIC T4 Ga Ta = -40ºC to +70ºC IP 66/67	**IEC – IECEx FMG 19.0037X:** Ex nA IIC T4 Gc Ta = -15ºC to + 70ºC IP 66/67

The following approval standards are applicable:
FM3600:2018, FM3610:2010, FM3611:2018, FM3616:2011, FM3810:2018, UL60079-0:2019, ANSI/ISA 60079-11:2014, ANSI/ISA 60079-15:2012, ANSI/ISA 60079-26:2014, ANSI/NEMA 250:2003, ANSI/IEC 60529:2004, CSA-C22.2 No. 25:2009, CSA-C22.2 No. 30:2007, CSA- C22.2 No. 94:2001, CSA-C22.2 No. 157:2012, CSA-C22.2 No. 213:2012, CAN/CSA 60079-0:2019 CAN/CSA 60079-11:2011 CAN/CSA 60079-15:2012 C22.2 No. 60529:R2010, ANSI/ISA 12.27.01, EN/IEC60079-0:2018, EN60079-11:2012, EN60079-15:2010, EN60079-26:2007, EN60529+A1:1991-2000, IEC60079-0:2017, IEC60079-1:2014, IEC60079-11:2011, IEC60079-15:2010, IEC60079-26:2006, ANSI/ISA 12.27.01:2011

AGENCY APPROVALS

Special Conditions of Use

1. The enclosure contains aluminum and is considered to present a potential risk of ignition by impact or friction. Care must be taken during installation and use to prevent impact or friction.
2. The risk of electrostatic discharge shall be minimized at installation, following the directions given in the instructions.
3. For installation with ambient temperature of +70 °C, refer to the manufacturer's instructions for guidance on proper selection of conductors.
4. WARNING—Explosion Hazard: Do not disconnect equipment when flammable or combustible atmoshpere is present.

REPLACEMENT OF DISPLACER TRANSMITTERS

ECLIPSE has proven to be the ideal replacement for existing torque tube transmitters. In numerous applications worldwide, customers have found the performance of ECLIPSE Guided Wave Radar transmitters to be superior to that of antiquated torque tube transmitters.

There are several benefits to using the ECLIPSE Model 706 as a replacement for torque tube transmitters:

- **Cost:**
  The cost of a new Model 706 transmitter cost is comparable to rebuilding an aging torque tube.
- **Installation:**
  No field calibration is necessary. The Model 706 transmitter can be configured in minutes with no level movement. (Complete factory pre-configuration is available, which can further decrease the installation effort).
- **Performance:**
  The ECLIPSE Model 706 is unaffected by changes in specific gravity and has no moving parts that can wear and lose tolerance.
- **Ease of replacement:**
  Proprietary and standard ASME flanges are offered on all ECLIPSE Model 706 probes so existing chamber/cages can be used.

In order to match the proper ECLIPSE transmitter with the proper external cage, consider the following:

- **Type of application:**
  Use the proper GWR probe for the application, see pages 8 and 9.
- **Overfill proof:**
  For optimum performance, use an overfill-safe probe in all chamber applications.

  Note: "Overfill" occurs when the level rises above the maximum range of operation. ***Some GWR probes may provide erroneous output in this zone unless an optimal, impedance-matched design is used.***
- **Minimum Cage Size:**
  - Basic coaxial or single rod probes: 2" minimum
  - Enlarged coaxial probes: 3" minimum

Refer to Bulletin 57-606

REPLACEMENT OF DISPLACER TRANSMITTERS

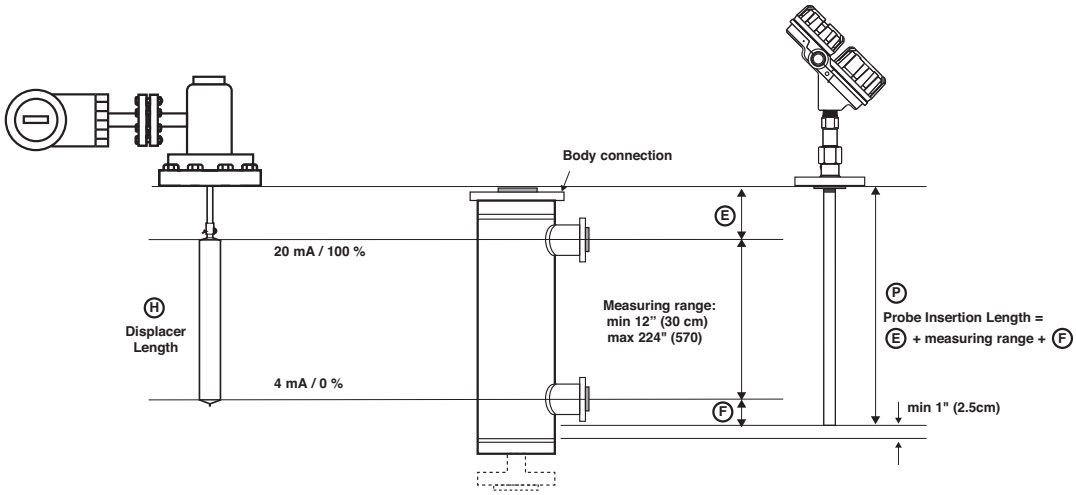

Recommended probe length for replacing displacer transmitters
The table below helps to define the GWR probe length for the most common displacer transmitters. Refer to the proprietary flange selection guide.

Manufacturer	Type	Process Connection	Displacer Length inches (mm)	Probe Length ① inches (mm)
MAGNETROL	EZ & PN Modulevel®	ASME/EN flange	≥ 14" (356)	Displacer + 7 (178)
Masoneilan®	Series 1200	Proprietary flange	≥ 14" (356)	Displacer + 8 (203)
		ASME/EN flange	≥ 16" (406)	Displacer + 8 (203)
Fisher® series 2300 & 2500	249B, 259B, 249C cages	Proprietary flange	≥ 14" (356)	Displacer + 10 (254)
	other cages	ASME flange	≥ 14" (356)	consult factory
Eckardt®	Series 134, 144	ASME/EN flange	≥ 14" (356)	consult factory
Tokyo Keiso®	FST-3000	ASME/EN flange	H = 11.8" (300)	Displacer + 9 (229)
		ASME/EN flange	≥ H = 19.7" (500)	Displacer + 9 (229)

① Round down resulting calculation to the nearest inch.

PROPRIETARY FLANGES

INCHES (mm)

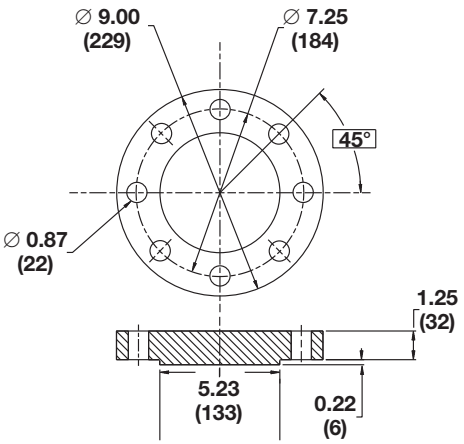

Fisher 249B/259B (600 lb.), carbon steel

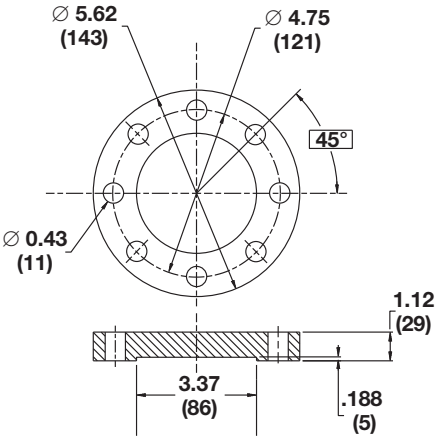

Fisher 249C (600 lb.), 316 stainless steel

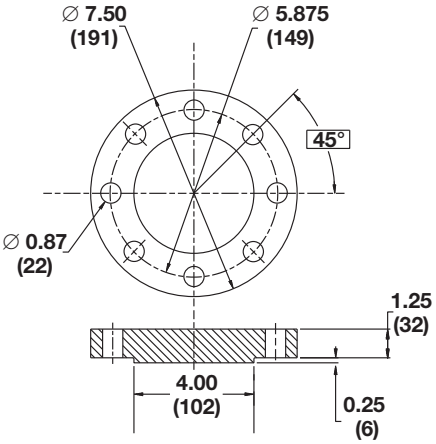

Masoneilan (600 lb.), carbon steel

MODEL NUMBER

TRANSMITTER

Models available for quick shipment, usually within one week after factory receipt of a complete purchase order, through the Expedite Ship Plan (ESP).

1 2 3 | BASIC MODEL NUMBER

7 0 0	ECLIPSE Guided Wave Radar (GWR) Level Transmitter

4 | POWER

5	24 VDC, Two-Wire

5 | SIGNAL OUTPUT

1	4–20 mA with HART

6 | SAFETY OPTIONS

2	SIL 2/3 Certified

7 | ACCESSORIES/MOUNTING

0	No Digital Display or Keypad – Integral
A	Digital Display and Keypad – Integral

8 | CLASSIFICATION

0	General Purpose, Weatherproof (IP 67)
1	Intrinsically Safe (FM & CSA CL 1 Div 1, Grps A, B, C, D)
A	Intrinsically Safe (ATEX/IEC Ex ia IIC T4)
C	Non-sparking (ATEX/IEC Ex n IIC T6) / Non-incendive (FM & CSA, CL 1 Div 2)

9 | HOUSING

5	Die-cast Aluminum, Single-compartment

10 | CONDUIT CONNECTION

0	½" NPT
1	M20

7	0	0	—	5	1	2		—		5	
1	2	3		4	5	6	7		8	9	10

DIMENSIONS

inches (mm)

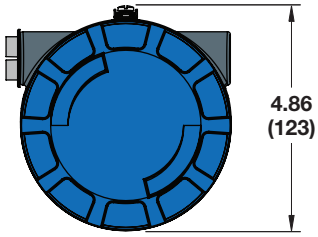

Top View

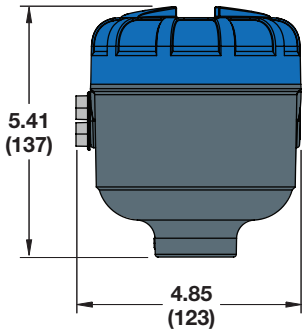

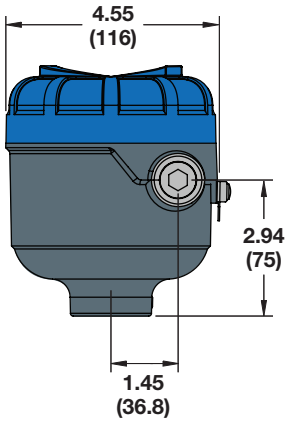

Side Views

MODEL NUMBER

SMALL COAXIAL PROBE

Models available for quick shipment, usually within one week after factory receipt of a complete purchase order, through the Expedite Ship Plan (ESP).

1 | TECHNOLOGY

7	ECLIPSE GWR Probes - Model 700

2 | MEASUREMENT SYSTEM

B	English (inches)
D	Metric (centimeters)

3 | CONFIGURATION/STYLE (RIGID)

P	Small Coaxial, High Pressure: Overfill w/Glass Seal (+400 °F/+200 °C) — Available only with 10th digit N
T	Small Coaxial, Overfill Standard O-Ring Seal (+400 °F/+200 °C) — NOT available with 10th digit N

4 5 | PROCESS CONNECTION – SIZE/TYPE (consult factory for other process connections)

Threaded

1 1	¾" NPT Thread
4 1	2" NPT Thread — Available only with 3rd Digit D

2 2	1" BSP (G1) Thread
4 2	2" BSP (G1) Thread — Available only with 3rd Digit D

ASME Flanges

2 3	1"	150# ASME RF ① ②
2 4	1"	300# ASME RF ① ②
2 5	1"	600# ASME RF ① ②
2 K	1"	600# ASME RTJ ① ②
3 3	1½"	150# ASME RF ②
3 4	1½"	300# ASME RF ②
3 5	1½"	600# ASME RF ②
3 K	1½"	600# ASME RTJ ②
3 7	1½"	900/1500# ASME RF②
3 M	1½"	900/1500# ASME RTJ②

3 8	1½"	2500# ASME RF ④
3 N	1½"	2500# ASME RTJ ④
4 3	2"	150# ASME RF
4 4	2"	300# ASME RF
4 5	2"	600# ASME RF
4 7	2"	900/1500# ASME RF
4 8	2"	2500# ASME RF
4 K	2"	600# ASME RTJ
4 M	2"	900/1500# ASME RTJ
4 N	2"	2500# ASME RTJ

5 3	3"	150# ASME RF
5 4	3"	300# ASME RF
5 5	3"	600# ASME RF
5 6	3"	900# ASME RF
5 7	3"	1500# ASME RF
5 8	3"	2500# ASME RF
5 K	3"	600# ASME RTJ
5 L	3"	900# ASME RTJ
5 M	3"	1500# ASME RTJ
5 N	3"	2500# ASME RTJ

6 3	4"	150# ASME RF
6 4	4"	300# ASME RF
6 5	4"	600# ASME RF
6 6	4"	900# ASME RF
6 7	4"	1500# ASME RF
6 8	4"	2500# ASME RF
6 K	4"	600# ASME RTJ
6 L	4"	900# ASME RTJ
6 M	4"	1500# ASME RTJ
6 N	4"	2500# ASME RTJ

EN Flanges

B B	DN 25, PN 16/25/40	EN 1092-1 TYPE A ① ②
B C	DN 25, PN 63/100	EN 1092-1 TYPE B2 ① ②
C B	DN 40, PN 16/25/40	EN 1092-1 TYPE A ②
C C	DN 40, PN 63/100	EN 1092-1 TYPE B2 ②
C F	DN 40, PN 160	EN 1092-1 TYPE B2 ②
C G	DN 40, PN 250	EN 1092-1 TYPE B2 ②
C H	DN 40, PN 320	EN 1092-1 TYPE B2 ②
C J	DN 40, PN 400	EN 1092-1 TYPE B2 ②
D A	DN 50, PN 16	EN 1092-1 TYPE A
D B	DN 50, PN 25/40	EN 1092-1 TYPE A
D D	DN 50, PN 63	EN 1092-1 TYPE B2
D E	DN 50, PN 100	EN 1092-1 TYPE B2
D F	DN 50, PN 160	EN 1092-1 TYPE B2
D G	DN 50, PN 250	EN 1092-1 TYPE B2
D H	DN 50, PN 320	EN 1092-1 TYPE B2
D J	DN 50, PN 400	EN 1092-1 TYPE B2

E A	DN 80, PN 16	EN 1092-1 TYPE A
E B	DN 80, PN 25/40	EN 1092-1 TYPE A
E D	DN 80, PN 63	EN 1092-1 TYPE B2
E E	DN 80, PN 100	EN 1092-1 TYPE B2
E F	DN 80, PN 160	EN 1092-1 TYPE B2
E G	DN 80, PN 250	EN 1092-1 TYPE B2
E H	DN 80, PN 320	EN 1092-1 TYPE B2
E J	DN 80, PN 400	EN 1092-1 TYPE B2
F A	DN 100, PN 16	EN 1092-1 TYPE A
F B	DN 100, PN 25/40	EN 1092-1 TYPE A
F D	DN 100, PN 63	EN 1092-1 TYPE B2
F E	DN 100, PN 100	EN 1092-1 TYPE B2
F F	DN 100, PN 160	EN 1092-1 TYPE B2
F G	DN 100, PN 250	EN 1092-1 TYPE B2
F H	DN 100, PN 320	EN 1092-1 TYPE B2
F J	DN 100, PN 400	EN 1092-1 TYPE B2

① Confirm mounting conditions/nozzle diameter to ensure sufficient clearance.
② Not available with 3rd Digit P

1	2	3	—	4	5	6	7	—	8	9	10	—	11	12	—	13	14	15
7																		

SMALL COAXIAL PROBE

6 | CONSTRUCTION CODES

0	Industrial

7 | FLANGE OPTIONS — Offset flanges are available only with small coaxial probes

0	None
1	Offset (For use with AURORA) — 4" flange only
2	Offset with ½" NPT Vent (For use with AURORA) — 4" flange only
3	Offset with ¾" NPT Vent (For use with AURORA) — 4" flange only

8 | MATERIAL OF CONSTRUCTION - FLANGE/NUT/ROD/INSULATION

A	316 SS/316L SS

9 | SPACER MATERIAL

1	TFE (+400 °F/+200 °C) — $\varepsilon_r \geq 1.4$

10 | O-RING MATERIALS/SEAL OPTIONS

0	Viton® GFLT — Available only with 3rd digit T
2	Kalrez® 4079 — Available only with 3rd digit T
8	Aegis PF 128 (NACE) — Available only with 3rd digit T
A	Kalrez 6375 — Available only with 3rd digit T
N	None — glass ceramic alloy — Available only with 3rd digit P

11 | PROBE SIZE/ELEMENT TYPE/FLUSHING CONNECTION

2	Small Coaxial (0.875 inches/22 mm)

12 | SPECIAL OPTIONS

0	Single Length Probe (Non-Segmented)

13 14 15 | INSERTION LENGTH

X X X	inches (012 – 240) cm (030 – 610)

unit of measure determined by 2nd digit of model number

7			—			0		—	A	1		—	2	0	—			
1	2	3		4	5	6	7		8	9	10		11	12		13	14	15

MODEL NUMBER

ENLARGED COAXIAL PROBE

Models available for quick shipment, usually within one week after factory receipt of a complete purchase order, through the Expedite Ship Plan (ESP).

1 | TECHNOLOGY

7	ECLIPSE GWR Probes - Model 700

2 | MEASUREMENT SYSTEM

B	English (inches)
D	Metric (centimeters)

3 | CONFIGURATION/STYLE (RIGID)

P	Enlarged Coaxial, High Pressure: Overfill w/Glass Seal (+400 °F/+200 °C) — **Available only with 10th digit N**
T	Enlarged Coaxial, Overfill Standard O-Ring Seal (+400 °F/+200 °C) — **NOT available with 10th digit N**

4 5 | PROCESS CONNECTION – SIZE/TYPE (consult factory for other process connections)

Threaded

4 1	2" NPT Thread ①
4 2	2" BSP (G1) Thread ①

ASME Flanges

4 3	2"	150# ASME RF ①
4 4	2"	300# ASME RF ①
4 5	2"	600# ASME RF ①
4 K	2"	600# ASME RTJ ①
5 3	3"	150# ASME RF
5 4	3"	300# ASME RF
5 5	3"	600# ASME RF
56	3"	900# ASME RF
57	3"	1500# ASME RF
58	3"	2500# ASME RF
5K	3"	600# ASME RTJ
5L	3"	900# ASME RTJ
5M	3"	1500# ASME RTJ
5N	3"	2500# ASME RTJ
6 3	4"	150# ASME RF
6 4	4"	300# ASME RF
6 5	4"	600# ASME RF
6 6	4"	900# ASME RF
6 7	4"	1500# ASME RF
6 8	4"	2500# ASME RF
6K	4"	600# ASME RTJ
6L	4"	900# ASME RTJ
6M	4"	1500# ASME RTJ
6N	4"	2500# ASME RTJ

EN Flanges

D A	DN 50, PN 16	EN 1092-1 TYPE A ①
D B	DN 50, PN 25/40	EN 1092-1 TYPE A ①
D D	DN 50, PN 63	EN 1092-1 TYPE B2 ①
D E	DN 50, PN 100	EN 1092-1 TYPE B2 ①
E A	DN 80, PN 16	EN 1092-1 TYPE A
E B	DN 80, PN 25/40	EN 1092-1 TYPE A
E D	DN 80, PN 63	EN 1092-1 TYPE B2
E E	DN 80, PN 100	EN 1092-1 TYPE B2
E F	DN 80, PN 160	EN 1092-1 TYPE B2
E G	DN 80, PN 250	EN 1092-1 TYPE B2
E H	DN 80, PN 320	EN 1092-1 TYPE B2
E J	DN 80, PN 400	EN 1092-1 TYPE B2
F A	DN 100, PN 16	EN 1092-1 TYPE A
F B	DN 100, PN 25/40	EN 1092-1 TYPE A
F D	DN 100, PN 63	EN 1092-1 TYPE B2
F E	DN 100, PN 100	EN 1092-1 TYPE B2
F F	DN 100, PN 160	EN 1092-1 TYPE B2
F G	DN 100, PN 250	EN 1092-1 TYPE B2
F H	DN 100, PN 320	EN 1092-1 TYPE B2
F J	DN 100, PN 400	EN 1092-1 TYPE B2

① Confirm mounting conditions/nozzle diameter to ensure sufficient clearance.

7			—				—				—		—			
1	2	3		4	5	6	7	8	9	10		11	12	13	14	15

ENLARGED COAXIAL PROBE

6 | CONSTRUCTION CODES

0	Industrial

7 | FLANGE OPTIONS — Offset flanges are available only with small coaxial probes

0	None

8 | MATERIAL OF CONSTRUCTION - FLANGE/NUT/ROD/INSULATION

A	316 SS/316L SS (Probe O.D. 1.75" (45mm))

9 | SPACER MATERIAL

1	TFE (+400 °F/+200 °C)

10 | O-RING MATERIALS/SEAL OPTIONS

0	Viton® GFLT — Available only with 3rd digit T
2	Kalrez® 4079 — Available only with 3rd digit T
8	Aegis PF 128 (NACE) — Available only with 3rd digit T
A	Kalrez 6375 — Available only with 3rd digit T
N	None — glass ceramic alloy — Available only with 3rd digit P

11 | PROBE SIZE/ELEMENT TYPE/FLUSHING CONNECTION

0	Enlarged Coaxial Probe
1	Enlarged Coaxial Probe with Flushing Port

12 | SPECIAL OPTIONS

0	Single Length Probe (Non-Segmented)

13 14 15 | INSERTION LENGTH

X X X	inches (012 – 240) cm (030 – 610)

unit of measure determined by 2nd digit of model number

1	2	3	—	4	5	6	7	—	8	9	10	—	11	12	—	13	14	15
7						0	0		A	1				0				

MODEL NUMBER

SINGLE ROD RIGID PROBE

Models available for quick shipment, usually within one week after factory receipt of a complete purchase order, through the Expedite Ship Plan (ESP).

1 | TECHNOLOGY

7	ECLIPSE GWR Probes - Model 700

2 | MEASUREMENT SYSTEM

B	English (inches)
D	Metric (centimeters)

3 | CONFIGURATION/STYLE (RIGID)

F	Single Rod, Standard (+400 °F/200 °C)

4 5 | PROCESS CONNECTION – SIZE/TYPE (consult factory for other process connections) ①

Threaded

1 1	¾" NPT Thread
2 1	1" NPT Thread
4 1	2" NPT Thread

2 2	1" BSP (G1) Thread
4 2	2" BSP (G1) Thread

ASME Flanges

3 3	1½" 150# ASME RF ①
3 4	1½" 300# ASME RF ①
3 5	1½" 600# ASME RF ①
4 3	2" 150# ASME RF ①
4 4	2" 300# ASME RF ①
4 5	2" 600# ASME RF ①
4 7	2" 900/1500# ASME RF
4 8	2" 2500# ASME RF
4 K	2" 600# ASME RTJ
4 M	2" 900/1500# ASME RTJ

4 N	2" 2500# ASME RTJ
5 3	3" 150# ASME RF
5 4	3" 300# ASME RF
5 5	3" 600# ASME RF
5 6	3" 900# ASME RF
5 7	3" 1500# ASME RF
5 8	3" 2500# ASME RF
5 K	3" 600# ASME RTJ
5 L	3" 900# ASME RTJ
5 M	3" 1500# ASME RTJ

5 N	3" 2500# ASME RTJ
6 3	4" 150# ASME RF
6 4	4" 300# ASME RF
6 5	4" 600# ASME RF
6 6	4" 900# ASME RF
6 7	4" 1500# ASME RF
6 8	4" 2500# ASME RF
6 K	4" 600# ASME RTJ
6 L	4" 900# ASME RTJ
6 M	4" 1500# ASME RTJ
6 N	4" 2500# ASME RTJ

EN Flanges

C B	DN 40, PN 16/25/40	EN 1092-1 TYPE A
C C	DN 40, PN 63/100	EN 1092-1 TYPE B2
C F	DN 40, PN 160	EN 1092-1 TYPE B2
C G	DN 40, PN 250	EN 1092-1 TYPE B2
D A	DN 50, PN 16	EN 1092-1 TYPE A ①
D B	DN 50, PN 25/40	EN 1092-1 TYPE A ①
D D	DN 50, PN 63	EN 1092-1 TYPE B2 ①
D E	DN 50, PN 100	EN 1092-1 TYPE B2 ①
D F	DN 50, PN 160	EN 1092-1 TYPE B2
D G	DN 50, PN 250	EN 1092-1 TYPE B2
D H	DN 50, PN 320	EN 1092-1 TYPE B2
D J	DN 50, PN 400	EN 1092-1 TYPE B2
E A	DN 80, PN 16	EN 1092-1 TYPE A ①
E B	DN 80, PN 25/40	EN 1092-1 TYPE A

E D	DN 80, PN 63	EN 1092-1 TYPE B2
E E	DN 80, PN 100	EN 1092-1 TYPE B2
E F	DN 80, PN 160	EN 1092-1 TYPE B2
E G	DN 80, PN 250	EN 1092-1 TYPE B2
E H	DN 80, PN 320	EN 1092-1 TYPE B2
E J	DN 80, PN 400	EN 1092-1 TYPE B2
F A	DN 100, PN 16	EN 1092-1 TYPE A
F B	DN 100, PN 25/40	EN 1092-1 TYPE A
F D	DN 100, PN 63	EN 1092-1 TYPE B2
F E	DN 100, PN 100	EN 1092-1 TYPE B2
F F	DN 100, PN 160	EN 1092-1 TYPE B2
F G	DN 100, PN 250	EN 1092-1 TYPE B2
F H	DN 100, PN 320	EN 1092-1 TYPE B2
F J	DN 100, PN 400	EN 1092-1 TYPE B2

① Confirm mounting conditions/nozzle diameter to ensure sufficient clearance.

7			—				—				—		—			
1	2	3		4	5	6	7	8	9	10		11	12		13	14	15

SINGLE ROD RIGID PROBE

6 | CONSTRUCTION CODES

0	Industrial

7 | FLANGE OPTIONS

0	None

8 | MATERIAL OF CONSTRUCTION - MFG/NUT/ROD/INSULATION

A	316 SS/316L SS
F	Faced Flange, PFA coated wetted surfaces
P	PFA coated rod

9 | SPACER MATERIAL

0	None

10 | O-RING MATERIALS/SEAL OPTIONS

0	Viton® GFLT
2	Kalrez 4079
8	Aegis PF 128 (NACE)
A	Kalrez 6375

11 | PROBE SIZE/ELEMENT TYPE/FLUSHING CONNECTION

0	Standard Single Rod

12 | SPECIAL OPTIONS

0	Non-Removable Rod Available only with PFA Coated Probes(8th digit F or P)
1	Removable Rod Not available with PFA Coated Probes(8th Digit F or P)

13 14 15 | INSERTION LENGTH

X X X	inches (012 – 288) cm (030 – 732) maximum 240 inches (610 cm) when 8th digit = F or P

unit of measure determined by 2nd digit of model number

1	2	3	—	4	5	6	7	—	8	9	10	—	11	12	—	13	14	15
7						0	0			0			0					

MODEL NUMBER

SINGLE FLEXIBLE PROBE

Models available for quick shipment, usually within one week after factory receipt of a complete purchase order, through the Expedite Ship Plan (ESP).

1 | TECHNOLOGY

7	ECLIPSE GWR Probes - Model 700

2 | MEASUREMENT SYSTEM

B	English
D	Metric

3 | SPECIALTY FLEXIBLE PROBES

1	Single Cable Flexible standard for in-tank applications (+400 °F/+200 °C)

4 5 | PROCESS CONNECTION – SIZE/TYPE (consult factory for other process connections)

Threaded

2 1	1" NPT Thread
3 1	1½" NPT Thread
4 1	2" NPT Thread

2 2	1" BSP (G1) Thread
4 2	2" BSP (G1) Thread

ASME Flanges

4 3	2" 150# ASME RF ①
4 4	2" 300# ASME RF ①
4 5	2" 600# ASME RF ①

5 3	3" 150# ASME RF
5 4	3" 300# ASME RF
5 5	3" 600# ASME RF

6 3	4" 150# ASME RF
6 4	4" 300# ASME RF
6 5	4" 600# ASME RF

EN Flanges

D W	DN 50, PN 16	EN 1092-1 TYPE B1 ①
D Z	DN 50, PN 25/40	EN 1092-1 TYPE B1 ①
D D	DN 50, PN 63	EN 1092-1 TYPE B2 ①
D E	DN 50, PN 100	EN 1092-1 TYPE B2 ①
E W	DN 80, PN 16	EN 1092-1 TYPE B1
E Z	DN 80, PN 25/40	EN 1092-1 TYPE B1
E D	DN 80, PN 63	EN 1092-1 TYPE B2
E E	DN 80, PN 100	EN 1092-1 TYPE B2
F W	DN 100, PN 16	EN 1092-1 TYPE B1
F Z	DN 100, PN 25/40	EN 1092-1 TYPE B1
F D	DN 100, PN 63	EN 1092-1 TYPE B2
F E	DN 100, PN 100	EN 1092-1 TYPE B2

① Confirm mounting conditions/nozzle diameter to ensure sufficient clearance.

7		1	—					—				—			—					
1	2	3		4	5	6	7		8	9	10		11	12		13	14	15

SINGLE FLEXIBLE PROBE

6 | CONSTRUCTION CODES

0	Industrial

7 | FLANGE OPTIONS

0	None

8 | MATERIAL OF CONSTRUCTION - MFG/NUT/ROD/INSULATION

A	316 SS/316L SS
P	PFA Coated

9 | SPACER/WEIGHT MATERIAL

0	PTFE Weight

10 | O-RING MATERIALS/SEAL OPTIONS

0	Viton® GFLT
2	Kalrez 4079
8	Aegis PF 128 (NACE)
A	Kalrez 6375

11 | PROBE SIZE/ELEMENT TYPE/FLUSHING CONNECTION

3	Flexible Cable Probe

12 | SPECIAL OPTIONS

1	Removable Single-piece Probe Cable

13 14 15 | INSERTION LENGTH

X X X	feet (003 – 100) meters (001 – 030)

unit of measure determined by 2nd digit of model number

1	2	3	—	4	5	6	7	—	8	9	10	—	11	12	—	13	14	15
7						0	0			0			3	1				

COAXIAL PROBE DIMENSIONS

INCHES (mm)

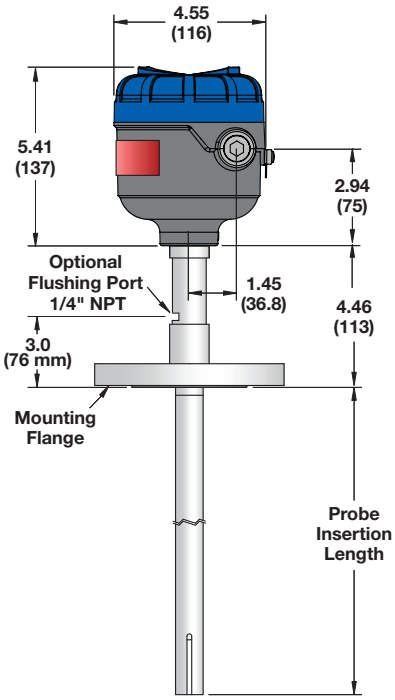

Model 7zT
with flanged connection

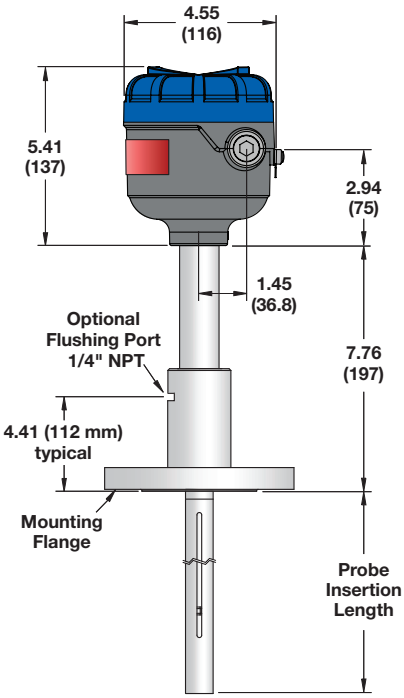

Model 7zP
with flanged connection

Inches (mm)

Dim.	Small Diameter	Enlarged (standard)
A	0.88 (22.5)	1.75 (45) - SST
B	0.31 (8)	0.63 (16)
C	4.08 (100)	6.05 (153)
D	0.15 (4)	0.30 (8)
E	3.78 (96)	5.45 (138)

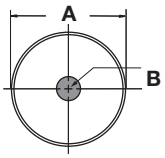

Coaxial GWR Probe, End View

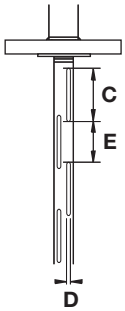

Coaxial Probe Slots

SINGLE ROD RIGID PROBE DIMENSIONS

INCHES (mm)

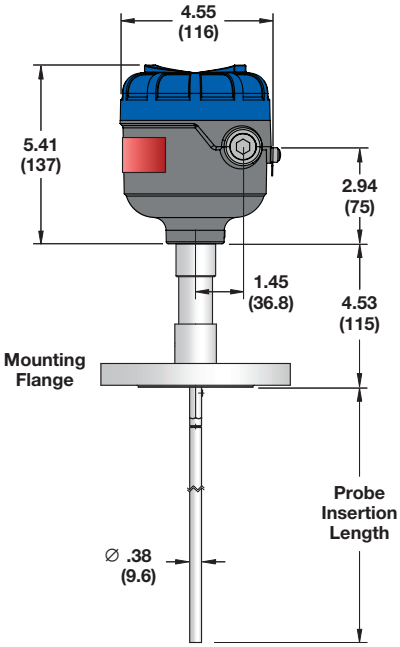

Model 7zF
with flanged connection

SINGLE CABLE FLEXIBLE PROBE DIMENSIONS

INCHES (mm)

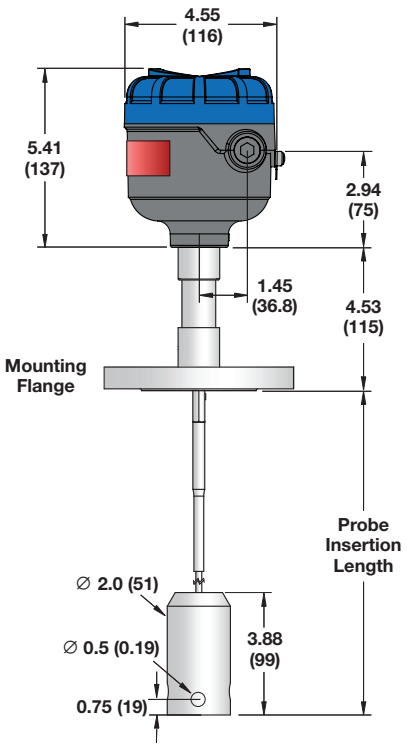

Model 7z1
with flanged connection

ELECTRICAL WIRING

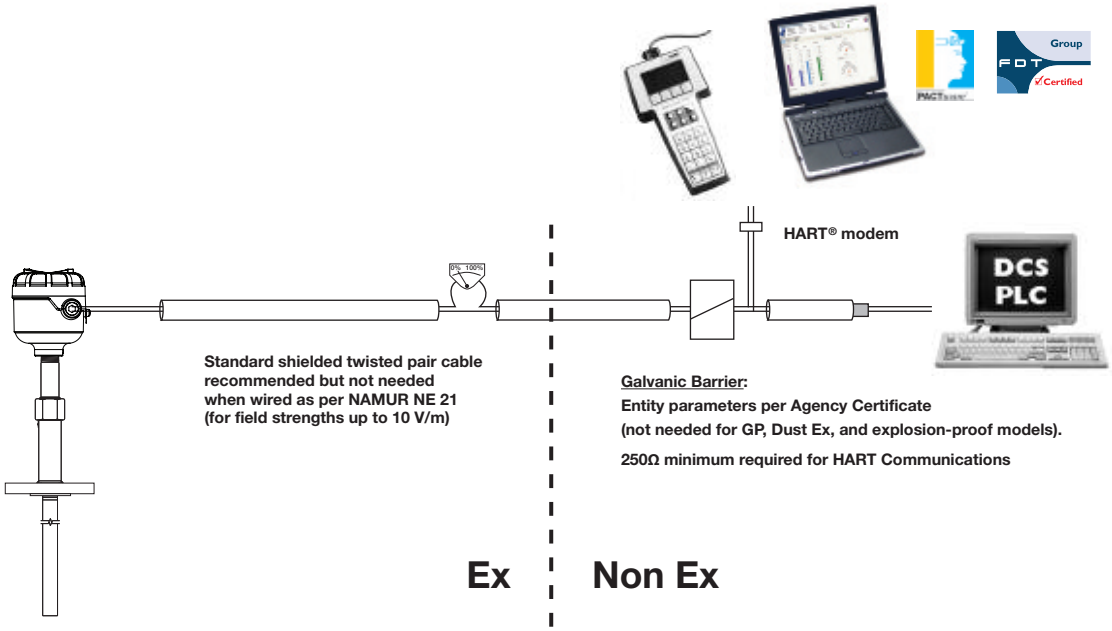

MOUNTING CONSIDERATIONS

1. Turbulence

The bottom of rigid probes should be stabilized if turbulence will cause a deflection of more than 3" (75 mm) at the end of a 10' (3 m) length. The probe should not make contact with metal.

2. Nozzle

Single rod performance in nozzles can be improved by ensuring the following:

- Nozzle must be 2" (50 mm) or larger diameter.
- Nozzle should be as short as possible.
- Nozzle inside diameter (A) should be ≥ to nozzle height (B).
  - If this is not the case, adjustments to BLOCKING DISTANCE and/or SENSITIVITY parameters may be required.

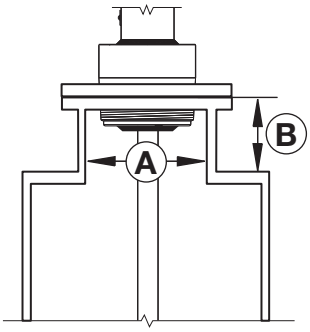

Correct Installation

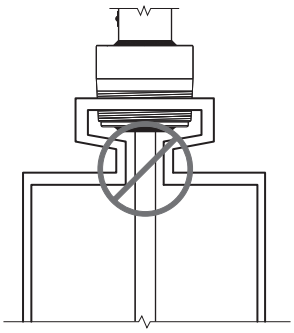

Pipe reducers should not be used

3. Metallic (conductive) obstructions in tank.

Although it depends on the transmitter configuration, objects in the proximity of the probe can cause erroneous readings. Please refer to the table below for guidelines, but please contact the factory with any questions as the distances shown can be reduced with the use of PACT*ware*™.

Distance to probe	Acceptable objects
< 6" (150 mm)	Continuous, smooth, parallel, conductive surface (e.g. metal tank wall); probe should not touch tank wall
> 6" (150 mm)	< 1"/DN25 diameter pipe and beams, ladder rungs
> 12" (300 mm)	< 3"/DN80 diameter pipe and beams, concrete walls
> 18" (450 mm)	All remaining objects

Note: A metal stillwell/cage of max. 6"/DN150 size or a metal tank wall parallel to the probe within 6" (150 mm) will allow the unit to operate accurately in media with dielectrics down to ε_r 1.4.

4. Non-metallic vessels

A metal flange is highly recommended for optimum performance in plastic vessels.

NOTE: Singe rod probes must be used in metallic vessels or stillwell to maintain CE noise immunity.

Shutdown /Overfill protection

Special consideration is necessary in any shutdown/overfill protection application where single rod GWR probes are used. To ensure proper measurement, use Overfill Capable single rod probes, such as the Model 7yG, L, or J Caged probes in the appropriate cage/chamber/stillwell. Refer to the Model 706 bulletin 57-106 for more information.

AURORA® CHAMBER

The Orion Instruments® Aurora® is the patented combination of the ECLIPSE Guided Wave Radar transmitter and a Magnetic Level Indicator (MLI). The integration of these two independent technologies provides excellent redundancy. A custom float positioned within the AURORA chamber travels up and down following level changes. The float contains an internal group of magnets that are "coupled" with magnets in the flags of the visual indicator mounted on the outside of the chamber. As the float moves, the flags rotate to expose the color of their opposite side. The position where the flag's color changes corresponds to a point on the measuring scale indicating true level. In addition to this external visual indicator operated by the AURORA internal float, the ECLIPSE Model 700 transmitter reflects electromagnetic radar pulses directly off the liquid surface providing a real-time continuous level output.

Refer to the Orion Instruments® ORI-138 brochure for details and additional options on AURORA chambers.

Regardless of whether a standard chamber or AURORA chamber is being used it is important to remember:

- Ensure that the Model 700 probe extends at least 4" (100 mm) past the lower process connection of the chamber
- Utilize Overfill-capable probes for optimal GWR performance.

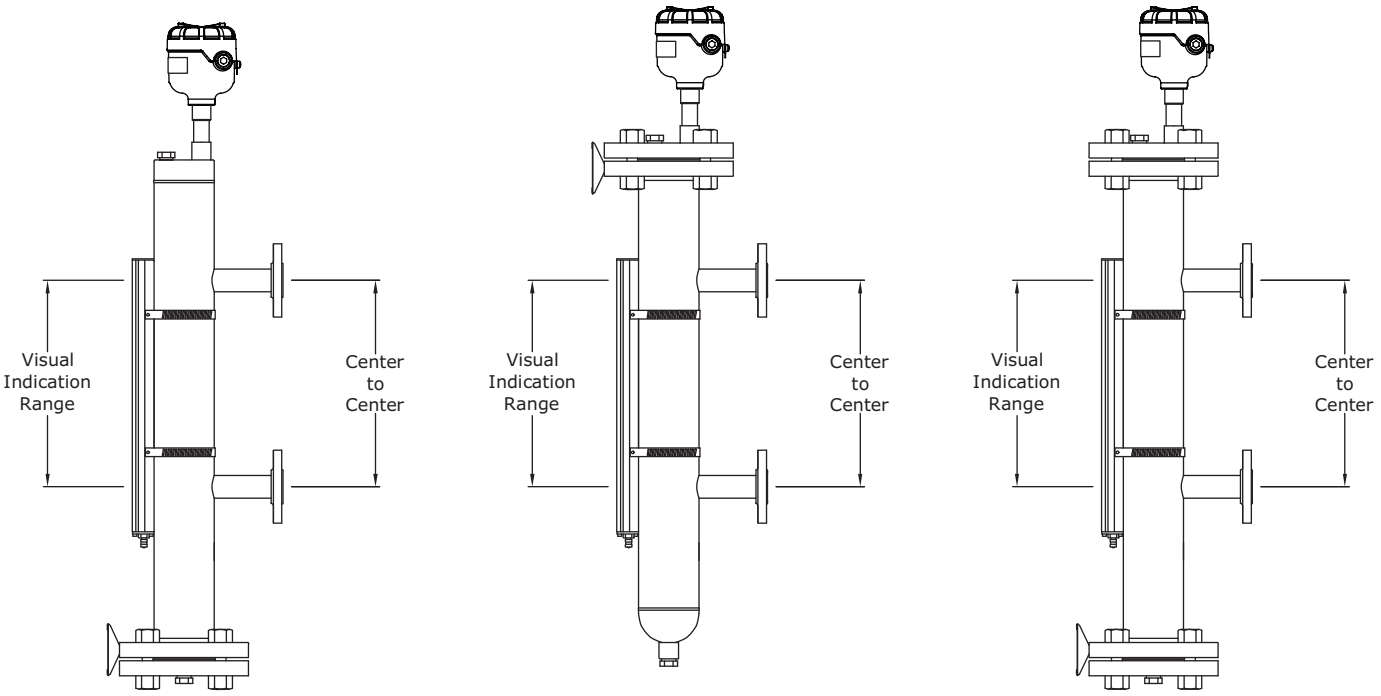

QUALITY

MAGNETROL
REGISTERED TO
ISO 9001
Your Assurance of
Quality and Service

The quality assurance system in place at MAGNETROL guarantees the highest level of quality throughout the company. MAGNETROL is committed to providing full customer satisfaction both in quality products and quality service.

The MAGNETROL quality assurance system is registered to ISO 9001 affirming its commitment to known international quality standards providing the strongest assurance of product/service quality available.

ESP

Expedite
Ship
Plan

Several Models of ECLIPSE Guided Wave Radar Transmitters are available for quick shipment, usually within one week after factory receipt of a complete purchase order, through the Expedite Ship Plan (ESP).

Models covered by ESP service are color coded in the selection data charts.

To take advantage of ESP, simply match the color coded model number codes (standard dimensions apply).

ESP service may not apply to orders of ten units or more. Contact your local representative for lead times on larger volume orders, as well as other products and options.

WARRANTY

All MAGNETROL electronic level and flow-controls are warranted free of defects in materials or workmanship for eighteen months from the date of original factory shipment.

If returned within the warranty period; and, upon factory inspection of the control, the cause of the claim is determined to be covered under the warranty; then, MAGNETROL will repair or replace the control at no cost to the purchaser (or owner) other than transportation.

MAGNETROL shall not be liable for misapplication, labor claims, direct or consequential damage or expense arising from the installation or use of equipment. There are no other warranties expressed or implied, except special written warranties covering some MAGNETROL products.

For additional information, see Instruction Manual 57-660.

ECLIPSE Guided Wave Radar transmitters may be protected by one or more of the following U.S. Patent Nos. US 6,062,095: US 6,247,362; US 6,588,272; US 6,626,038; US 6,640,629; US 6,642,807; US 6,690,320; US 6,750,808; US 6,801,157; US 6,867,729; US 6,879,282; 6,906,662. May depend on model. Other patents pending.

MAGNETROL®

705 Enterprise Street • Aurora, Illinois 60504-8149 • 630.969.4000
info@magnetrol.com • magnetrol.com

Copyright © 2020 Magnetrol International, Incorporated.
Performance specifications are effective with date of issue and are subject to change without notice.

Magnetrol & Magnetrol logotype, Orion Instruments & Orion Instruments logotype, ECLIPSE and MODULEVEL are registered trademarks of Magnetrol International, Incorporated.

CSA logotype is a registered trademark of Canadian Standards Association.
Eckardt is a registered trademark of Invensys Process Systems.
Fisher is a registered trademark of Emerson Process Management.
HART is a registered trademark of the HART Communication Foundation.
Masoneilan is a registered trademark of Dresser Industries, Inc.
PACTware is trademark of PACTware Consortium.
Teflon is a registered trademark of DuPont.
Tokyo Keiso is a registered trademark of Tokyo Keiso Co., Ltd.
Viton and Kalrez are registered trademarks of DuPont Performance Elastomers.

BULLETIN: 57-108.0
EFFECTIVE: April 2020