NEEDLE-ROLLER-BEARING
滚轮滚针轴承系列

- **Needle Roller Bearing KR/CF**
  滚轮滚针轴承 KR/CF

BL LINEAR®
UNITED PRECISION MACHINERY CO.,LTD.

Needle Roller Bearing
滚轮滚针轴承

This model Cam Follower with a screw driver slot or hexagon socket in the stud head to aid mounting. An all stainless steel type (symbol M) is available for applications where corrosion resistance is required.

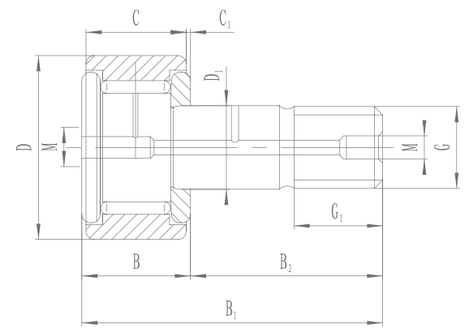

型号 Model No.		尺寸 Dimensions (mm)											偏心量 Eccentricity	额定负荷 Load ratings		极限转数 Limits of speed (rpm)	重量 Weight (g)
新 New	旧 Old	D	C	G	d1	G1	B	B1	B2	B3	C1	ramin		动 dyn.c (kgf)	静 stat.co (kgf)		
KR13	CF5	13	9	M5X0.8	5	7	10	23	13	–	0.5	0.3	0.25	280	180	29000	16
KR16	CF6	16	11	M6X1	6	8	12.2	28.2	16	–	0.6	0.3	0.25	270	170	25000	18
KR19	CF8	19	11	M8X1.25	8	10	12.2	32.2	20	–	0.6	0.3	0.25	300	210	20000	28
KR22	CF10	22	12	M10X1.25	10	12	13.2	36.2	23	–	0.6	0.3	0.3	410	320	17000	44
KR26	CF10K	26	12	M10X1.25	10	12	13.2	36.2	23	–	0.6	0.3	0.3	410	320	17000	58
KR30	CF12	30	14	M12X1.5	12	13	15.2	40.2	25	6	0.6	0.6	0.3	590	450	14000	87
KR32	CF12K	32	14	M12X1.5	12	13	15.2	40.2	25	6	0.6	0.6	0.3	590	450	14000	90
KR35	CF16	35	18	M16X1.5	16	17	19.6	52.1	32.5	8	0.8	0.6	0.35	850	760	10000	169
KR40	CF18	40	20	M18X1.5	18	19	21.6	58.2	36.5	8	0.8	1	0.35	1180	1220	8500	247
KR47	CF20	47	24	M20X1.5	20	21	25.6	66.1	40.5	9	0.8	1	0.35	1630	1690	7000	386
KR52	CF20K	52	24	M20X1.5	20	21	25.6	66.1	40.5	9	0.8	1	0.35	1630	1690	7000	461
KR62	CF24	62	29	M24X1.5	24	25	30.6	80.1	49.5	11	0.8	1	0.4	2160	2210	6500	790
KR72	CF24K	72	29	M24X1.5	24	25	30.6	80.1	49.5	11	0.8	1	0.4	2160	2210	6500	1040
KR80	CF30	80	35	M30X1.5	30	32	37	100	63	15	1	1	0.5	2830	3700	5000	1550
KR85	CF30K	85	35	M30X1.5	30	32	37	100	63	15	1	1	0.5	2830	3700	5000	1740
KR90	CF30J	90	35	M30X1.5	30	32	37	100	63	15	1	1	0.5	2830	3700	5000	1950