NATIONAL OILWELL VARCO

TDS-11SA

Top Drive System Service Manual

SM00856
Revision B

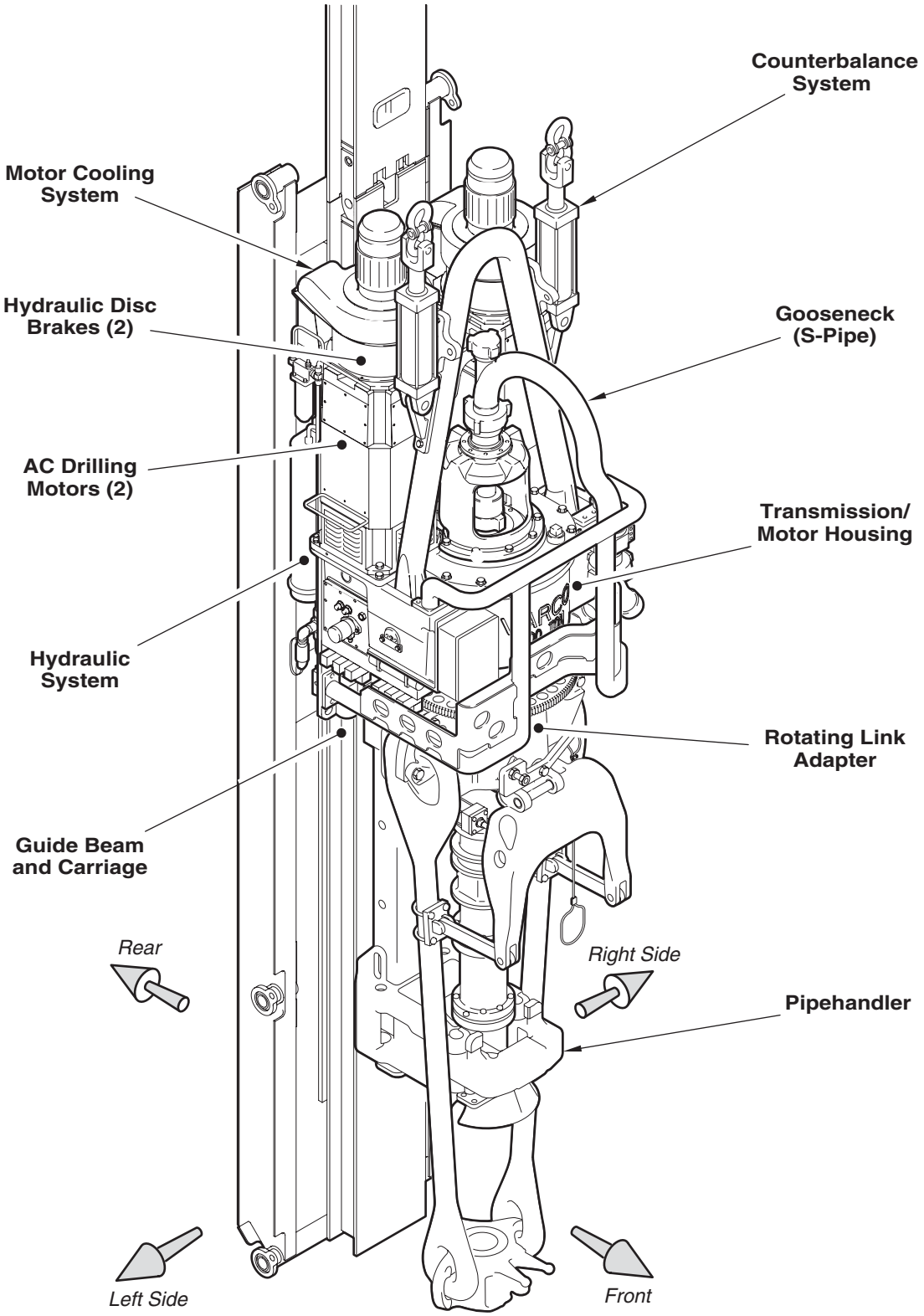
Counterbalance System
Motor Cooling System
Hydraulic Disc Brakes (2)
Gooseneck (S-Pipe)
AC Drilling Motors (2)
Transmission/ Motor Housing
Hydraulic System
Rotating Link Adapter
Guide Beam and Carriage
Rear
Right Side
Pipehandler
Left Side
Front

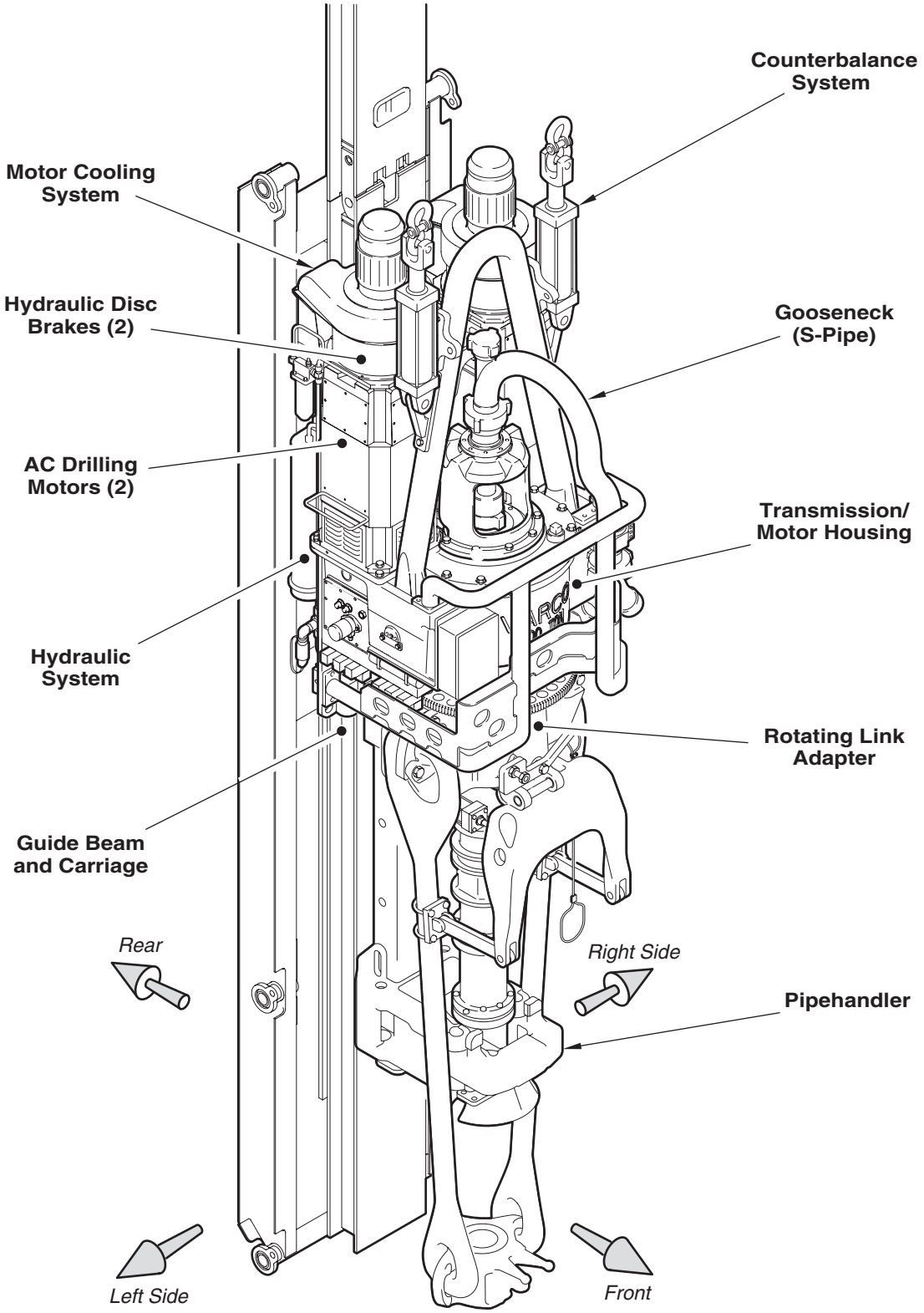
Counterbalance System
Motor Cooling System
Hydraulic Disc Brakes (2)
Gooseneck (S-Pipe)
AC Drilling Motors (2)
Transmission/ Motor Housing
Hydraulic System
Rotating Link Adapter
Guide Beam and Carriage
Rear
Right Side
Pipehandler
Left Side
Front

Preface

Manual conventions

This Preface contains the conventions used throughout this manual. Avoid injury to personnel and/or equipment damage by reading this manual and related documents before operating, inspecting, or servicing the equipment.

The following examples explain the symbols for notes, cautions, and warnings. Please pay close attention to these important advisories.

Note

Provides additional information on procedures involving little or no risk of injury to personnel or equipment damage.

Caution

Alerts the reader to procedures involving a risk of equipment damage.

Warning

Warns the reader of procedures involving a definite risk of injury to rig personnel.

Overall equipment safety requirements

Varco drilling equipment is installed and operated in a controlled drilling rig environment that involves hazardous operations and situations.

To avoid injury to personnel or equipment damage, carefully observe the following safety requirements.

Personnel training

All personnel installing, operating, repairing, or maintaining equipment, or those in the vicinity of this equipment, should be trained in rig safety, tool operation, and maintenance as applicable.

This measure helps ensure the safety of everyone exposed to the equipment for whatever purpose.

During installation, operation, maintenance, or repair of this equipment, personnel should wear protective equipment.

Contact the Varco Service Department to arrange for training for equipment operation and maintenance.

Systems safety practices

The equipment covered by this manual may require or contain one or more utilities such as electrical, hydraulic, pneumatic, and cooling water.

Before installing, performing maintenance or repairs on the equipment, read the following instructions to avoid endangering exposed persons or damaging equipment.

- ❑ Isolate all energy sources before beginning work.
- ❑ Avoid performing maintenance and repairs while the equipment is in operation.
- ❑ Wear proper protective equipment during the installation, maintenance, or repair of this equipment.

Electrical systems and components

All electrical wiring, junction boxes, sensors, glands, and related equipment are designed for the specific application, environment and particular zone where the equipment is intended to be used.

- ❑ Before beginning work on this equipment, familiarize yourself with the electrical schematics, as well as the equipment power and voltage requirements.
- ❑ When performing installation, maintenance, or repairs on the equipment, isolate all power. Lock out switches and tag them to prevent injury.
- ❑ Prior to disconnecting wires, verify that all wires and terminals are properly labeled to ensure proper reconnection.

Hydraulic systems and components

Hydraulic systems and components are designed for specific use in the drilling industry. The hydraulic pressure for this equipment can be as high as 3,000 psi.

- ❑ Before beginning work on any portion of the hydraulic system, familiarize yourself with the hydraulic and electrical schematics.
- ❑ Isolate, lock out, and tag the hydraulic and electrical power and controls.
- ❑ Take precautions when bleeding down residual system pressure, using bleed valves or equivalent techniques.

Hydraulic fluids can be extremely hot and under high pressure.

- ❑ Properly discharge all system accumulators.
- ❑ Collect all residual hydraulic fluid in a container to prevent rig or environmental contamination.
- ❑ Take precautions to prevent hydraulic oil from leaking into other open electrical or mechanical components, such as junction boxes.

Pneumatic systems and components

Pneumatic systems and components are designed for specific use in the drilling industry. The pneumatic pressure for this equipment can be as high as 150 psi.

- ❑ Prior to beginning work on any portion of the pneumatic system, familiarize yourself with the pneumatic and electrical schematics.
- ❑ Isolate, lock out, and tag the pneumatic, electrical power and controls.
- ❑ Take precautions when bleeding down residual system pressure using bleed valves or equivalent techniques.
- ❑ Properly discharge all system accumulators.

General safety

Equipment motion hazards

Some Varco equipment can travel horizontally, vertically or both.

Avoid placing objects in or near the path of motion for this equipment. Such interference could cause personnel to be trapped or crushed by equipment.

Keep the working envelope/zone of the equipment free from personnel.

When replacing components

- During disassembly and reassembly of any equipment, verify all components such as cables, hoses, etc. are tagged and labeled to ensure reinstalling the components correctly.
- Replace failed or damaged components with Varco certified parts. Failure to do so could result in a hazard, equipment damage, or personal injury.

During routine maintenance

Equipment must be maintained on a regular basis. See the body of the service manual for maintenance recommendations.

Failure to conduct regular maintenance can result in a hazard, equipment damage or injury to personnel.

Visibility of equipment operation

Clear, unobstructed visibility of all equipment functions is critical to safe operation. Do not block or impair the equipment operator's field of view. In cases where this is not possible, the customer must install video cameras to ensure adequate visibility.

Proper use of equipment

Varco equipment is designed for specific functions and applications, and should be used only for the intended purpose.

Do not hoist personnel using this equipment.

Contact the Varco service center for questions regarding equipment operation, maintenance, hazards, and designed function.

Varco Service Centers

If you need technical assistance, see the back cover of this manual for a complete list of Varco's Worldwide Service Centers.

Identification numbers

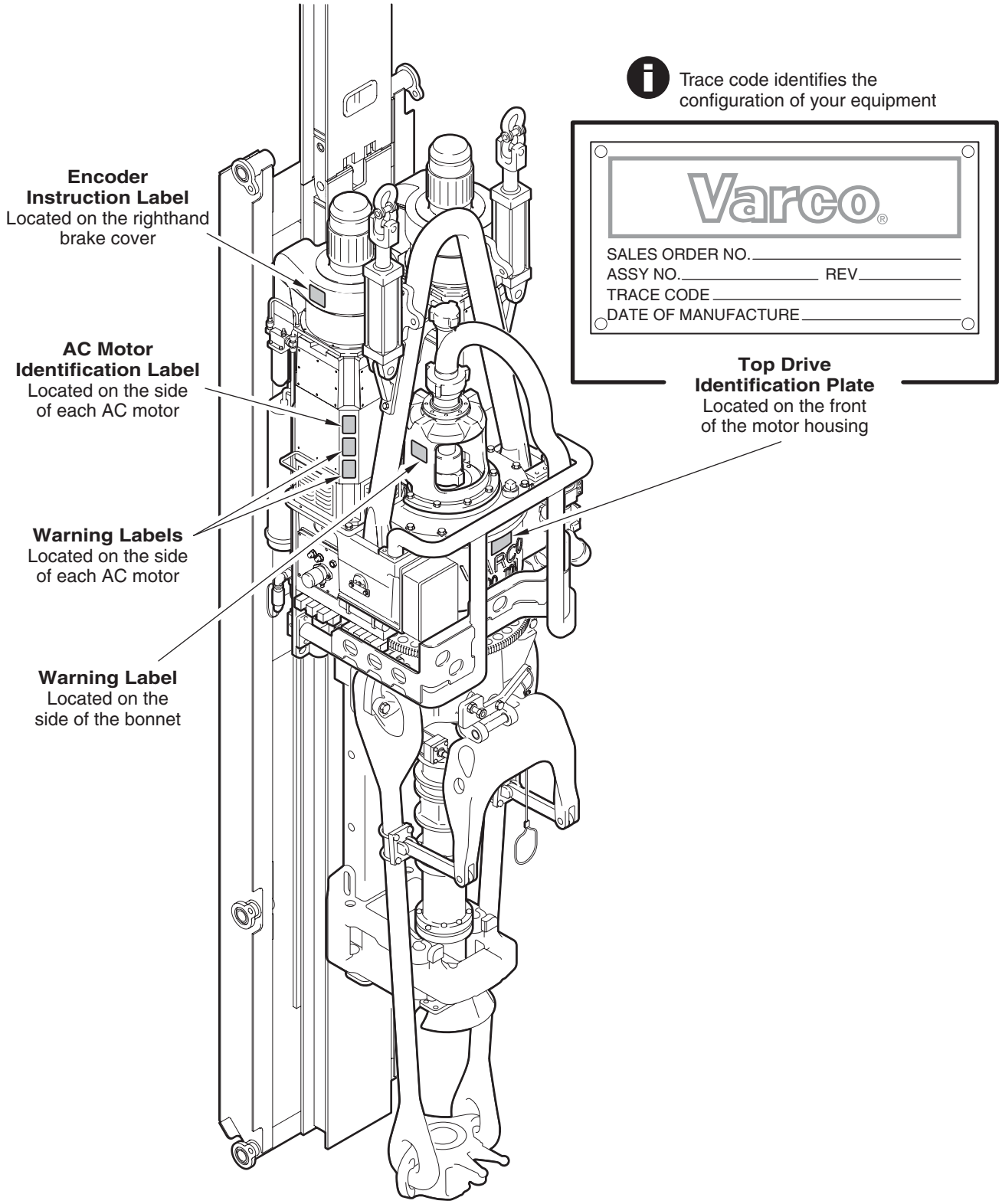

Lifting points

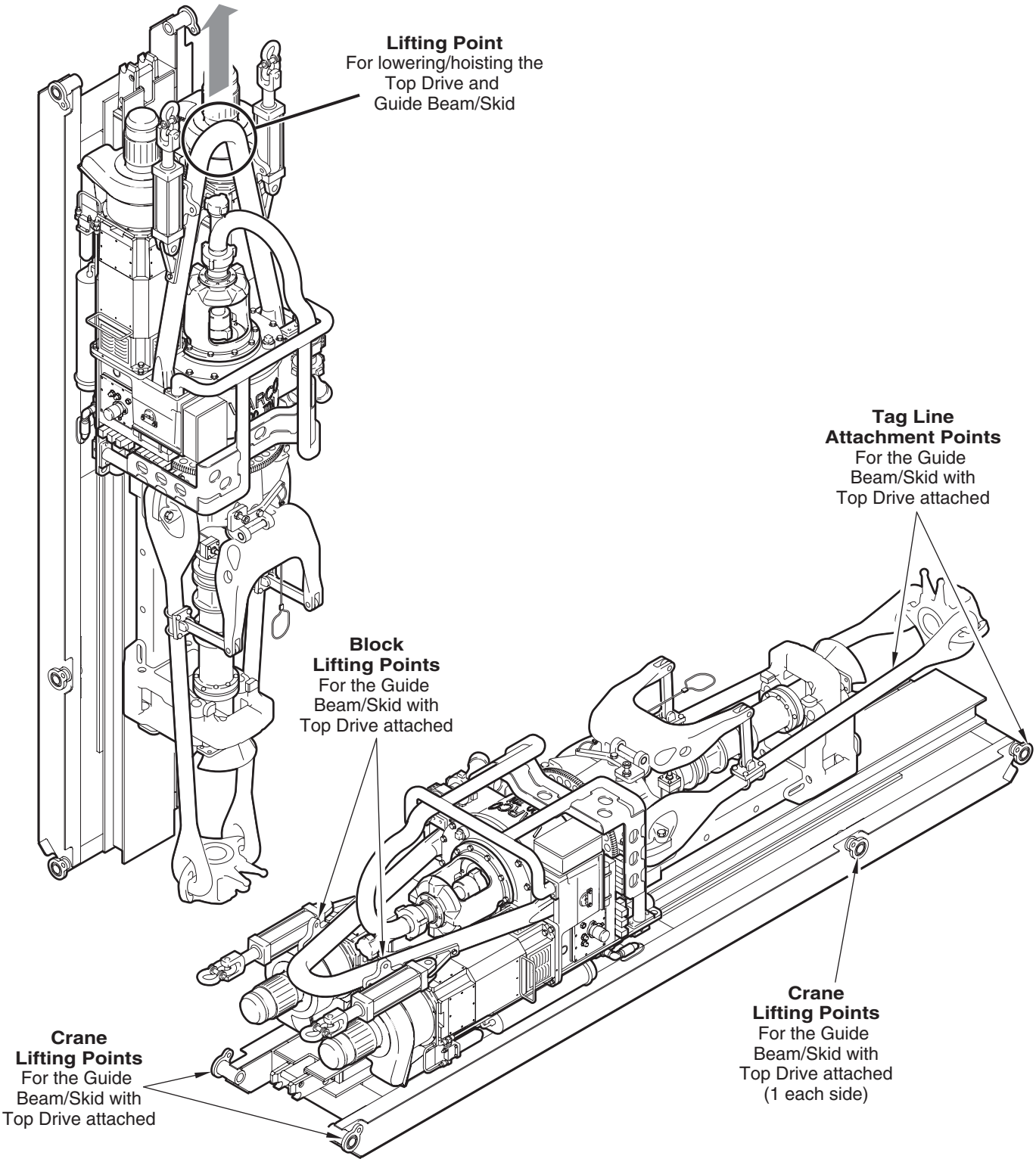

Safety wiring

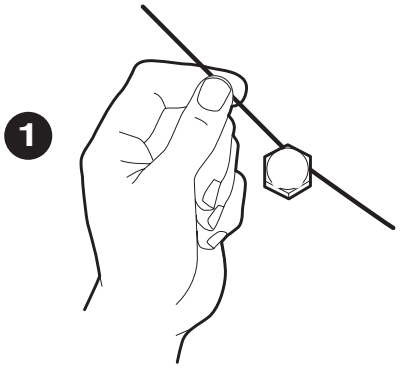

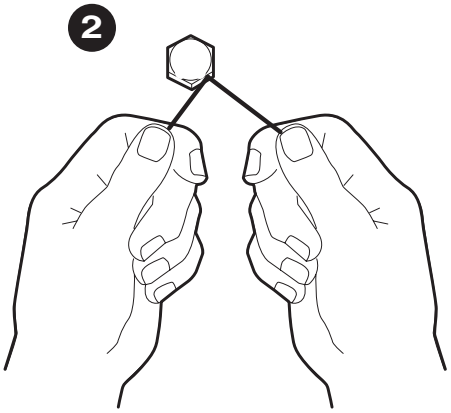

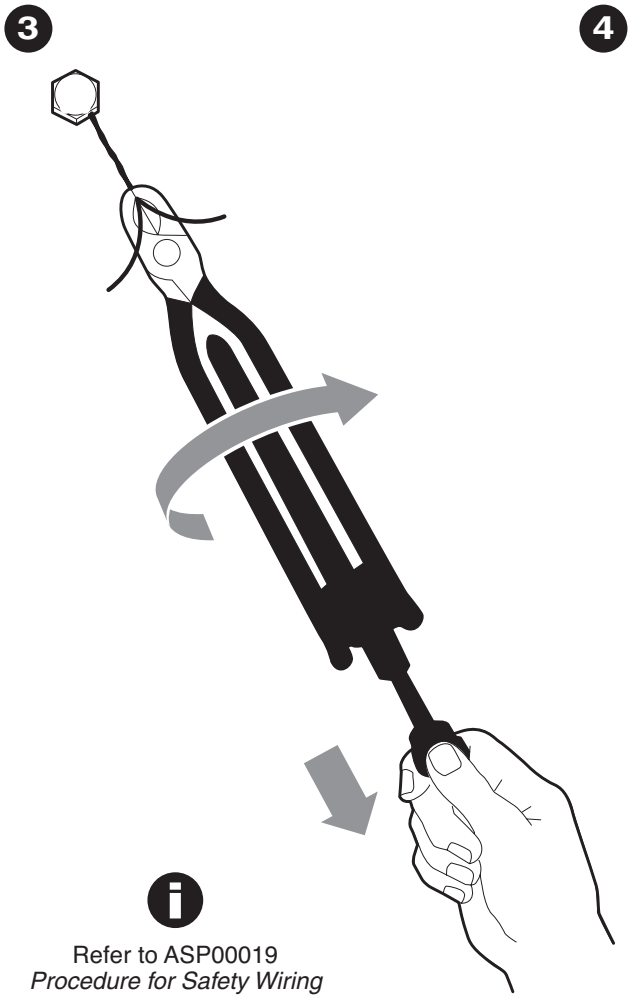

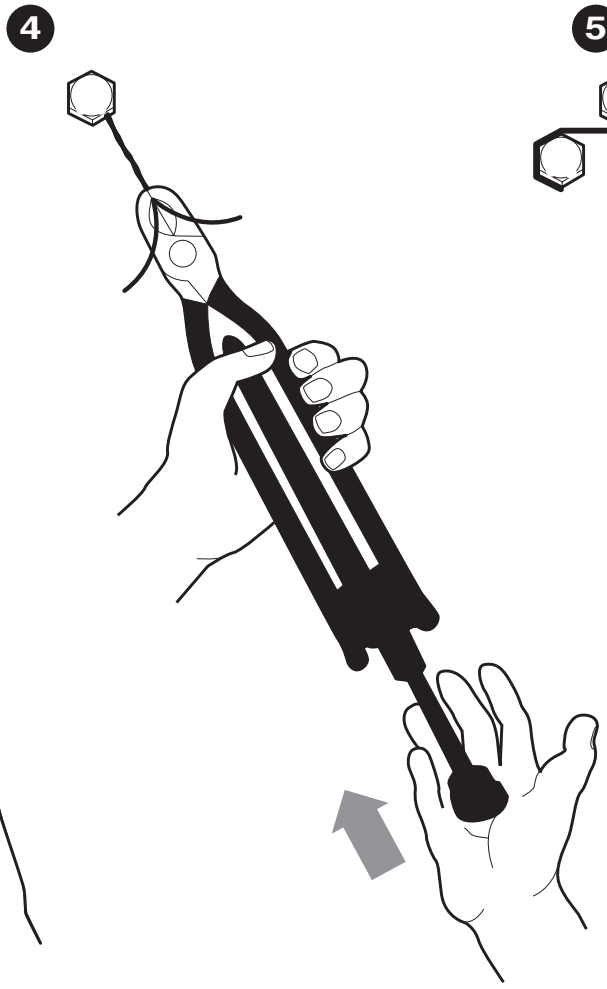

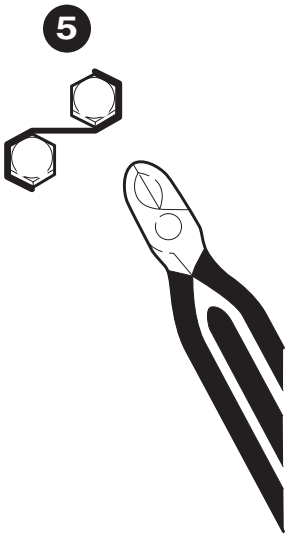

Refer to ASP00019
Procedure for Safety Wiring

Torque values

(Unless otherwise specified)

		Bolts Lubricated with *Light Machine Oil*			Bolts Lubricated with *Anti-seize Compound*		
		Grade 5			*Grade 5*		
Diameter	Threads per inch	Min. Torque (ft lb)	Max. Torque (ft lb)	Clamp Force (lb)	Min. Torque (ft lb)	Max. Torque (ft lb)	Clamp Force (lb)
Coarse Thread Series, UNC							
1/4	20	7.6	8.4	2020	5.7	6.3	2020
5/16	18	16	18	3340	12.1	13.4	3340
3/8	16	29	32	4940	21.4	23.6	4490
7/16	14	48	53	6800	36	39	6800
1/2	13	71	79	9050	53	59	9050
9/16	12	105	116	11600	78	87	11600
5/8	11	143	158	14400	107	118	14400
3/4	10	247	273	21300	185	205	21300
7/8	9	409	452	29400	306	339	29400
1	8	608	672	38600	456	504	38600
1 1/8	7	760	840	42300	570	630	42300
1 1/4	7	1064	1176	53800	798	882	53800
1 3/8	6	1387	1533	64100	1040	1150	64100
1 1/2	6	1843	2037	78000	1382	1528	78000
Fine Thread Series, UNF							
1/4	28	9.5	10.5	2320	7.1	7.9	2320
5/16	24	18	20	3700	13.5	15.0	3700
3/8	24	33	37	5600	25	28	5600
7/16	20	52	58	7550	39	43	7550
1/2	20	86	95	10700	64	71	10700
9/16	18	114	126	12950	86	95	12950
5/8	18	162	179	16300	121	134	16300
3/4	16	285	315	23800	214	236	23800
7/8	14	447	494	32400	335	370	32400
1	14	665	735	42200	499	551	42200
1 1/8	12	836	924	47500	627	693	47500
1 1/4	12	1178	1302	59600	884	977	59600
1 3/8	12	1596	1764	73000	1197	1323	73000
1 1/2	12	2090	2310	87700	1568	1733	87700

T.S. = 120,000 psi to 1" dia. Proof Strength = 85,000 psi
T.S. = 105,000 psi 1 1/8" to 1 1/2" dia. Proof Strength = 74,000 psi

Basic useage

Drilling ahead with singles

Step 1

- Set slips on string
- Stop circulation
- Close IBOP
- Breakout connection using pipehandler and drilling motor (in reverse)

Step 2

- Tilt links to mousehole
- Latch drill pipe elevator around single

Step 3

- Pickup single with elevator
- Release link tilt
- Stab bottom of single onto string

Step 4

- Lower block to stab motor into top of single
- Spin in motor and single
- Makeup both connections with motor in torque mode

Step 5

- Pull slips
- Open IBOP
- Start circulation
- Begin drilling

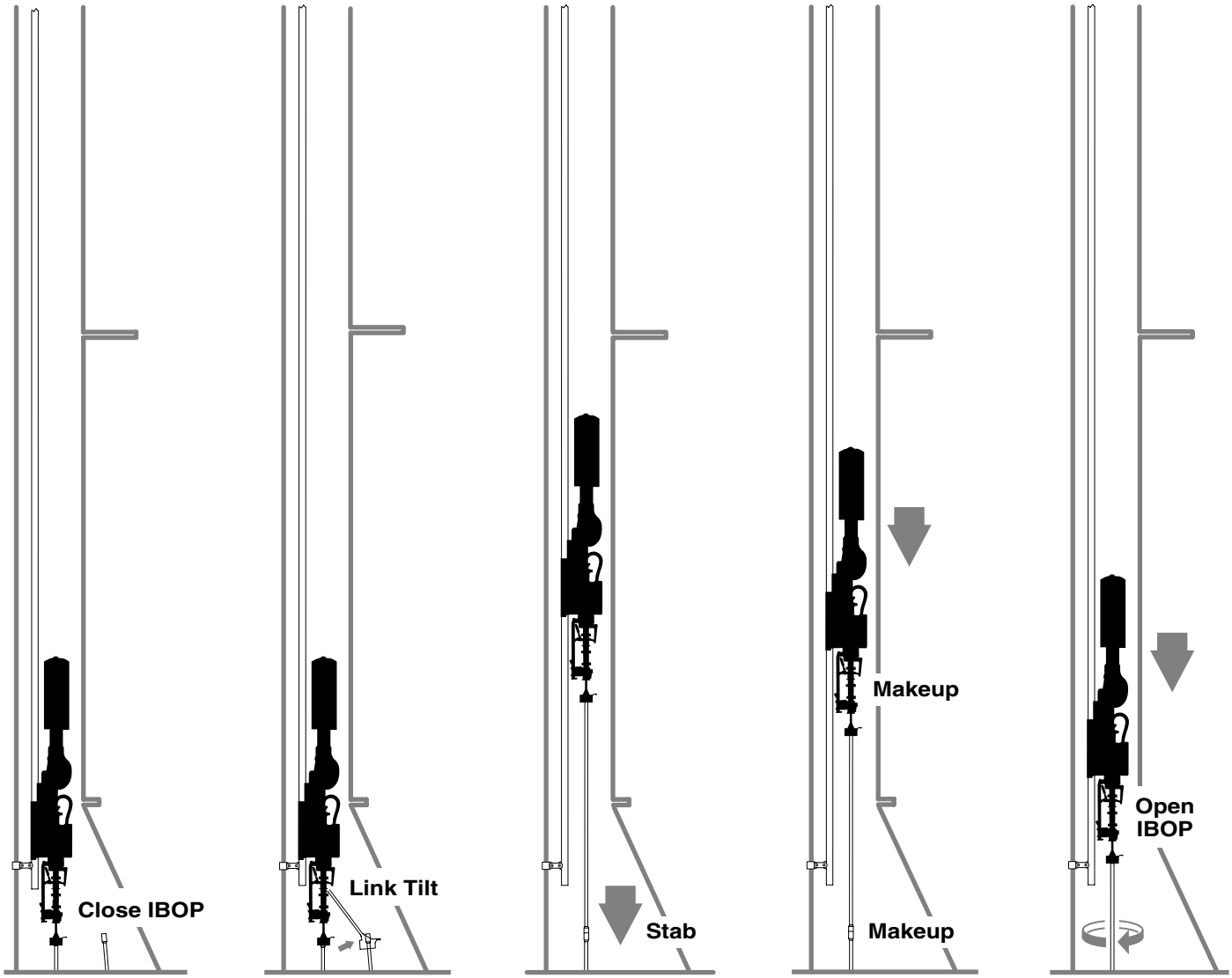

Basic useage

Drilling ahead with triples

Step 1

- Set slips on string
- Stop circulation
- Breakout connection using pipehandler and drilling motor (in reverse)

Step 2

- Raise block
- Tilt link tilt to derrickman

Step 3

- Pickup stand with elevator
- Stab bottom of stand onto string

Step 4

- Lower block to stab motor into top of stand
- Spin in motor and stand
- Makeup both connections with motor

Step 5

- Pull slips
- Start circulation
- Begin drilling

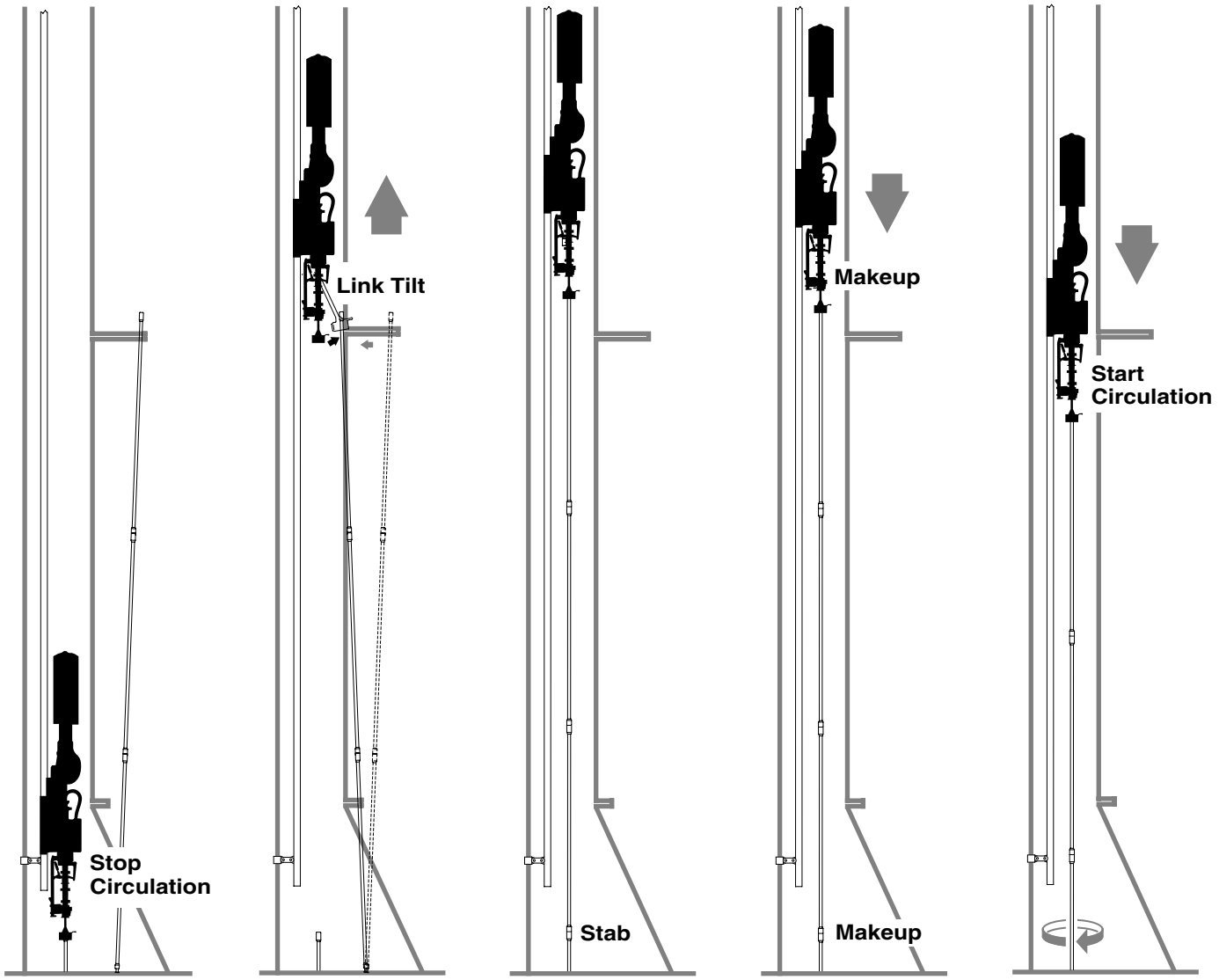

Basic useage

Backreaming

Step 1

- Hoist while circulating and rotating
- When 3-rd connection surfaces, stop rotation and circulation

Step 2

- Set slips on string
- Breakout connection using pipehandler and drilling motor (reverse)
- Breakout and spinout stand at floor

Step 3

- Hoist free stand with elevator

Step 4

- Setback stand using link tilt

Step 5

- Lower block, stab motor into string
- Spin in motor and makeup connection with motor
- Start circulation, pull slips, hoist and rotate

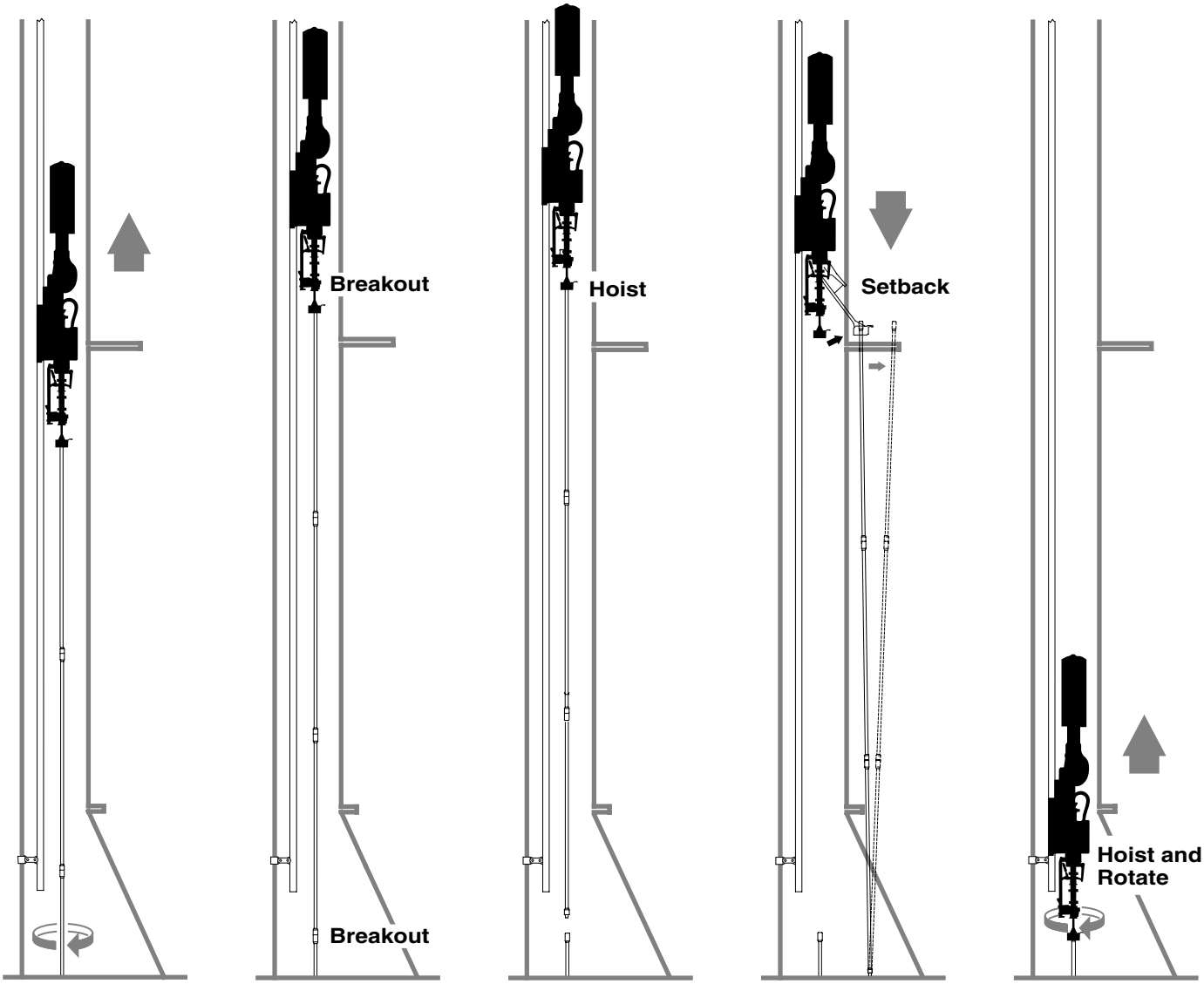

Consumables

Consumable Part	Quantity	Part Number
Tong Dies	4	16401-2
Stabilizer, Front	1	118368
Stabilizer, Rear	1	118367
Guide Arm (Stabbing Guide Flippers)	2	76442
Wash Pipe (Standard)	1	30123289
Wash Pipe (Tungsten Coated, High Pressure)	1	30123289-TC
Wash Pipe Assembly (Standard)	1	30123290
Wash Pipe Assembly (High Pressure)	1	30123290-1000
Wash Pipe Packing Kit, 3" Standard (Use with Wash Pipe 123289)	1	30123290-PK
Wash Pipe Packing Kit, 3" High Pressure (Use with Wash Pipe 123289-TC only)	1	30123290-PK-1
Hydraulic Oil Filter	1	114416-1
Gear Oil Filter	1	30111013-1
Brake Pads	8	109528-1

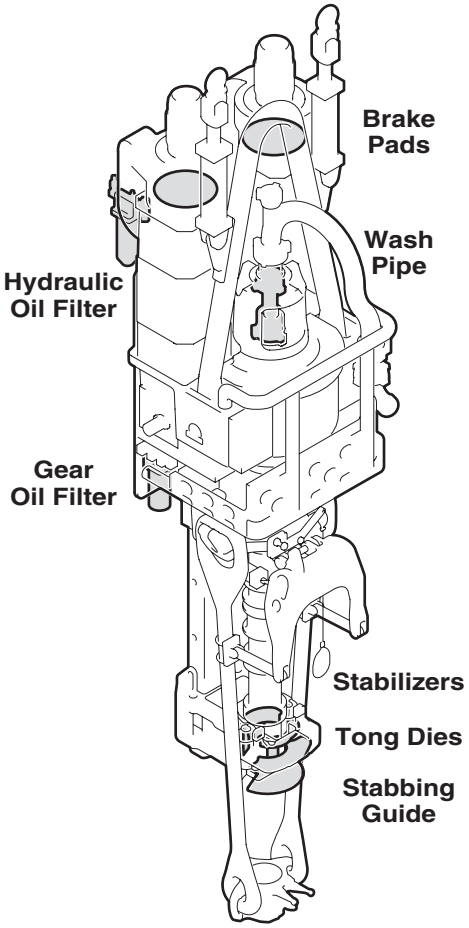

Specifications

Size specifications

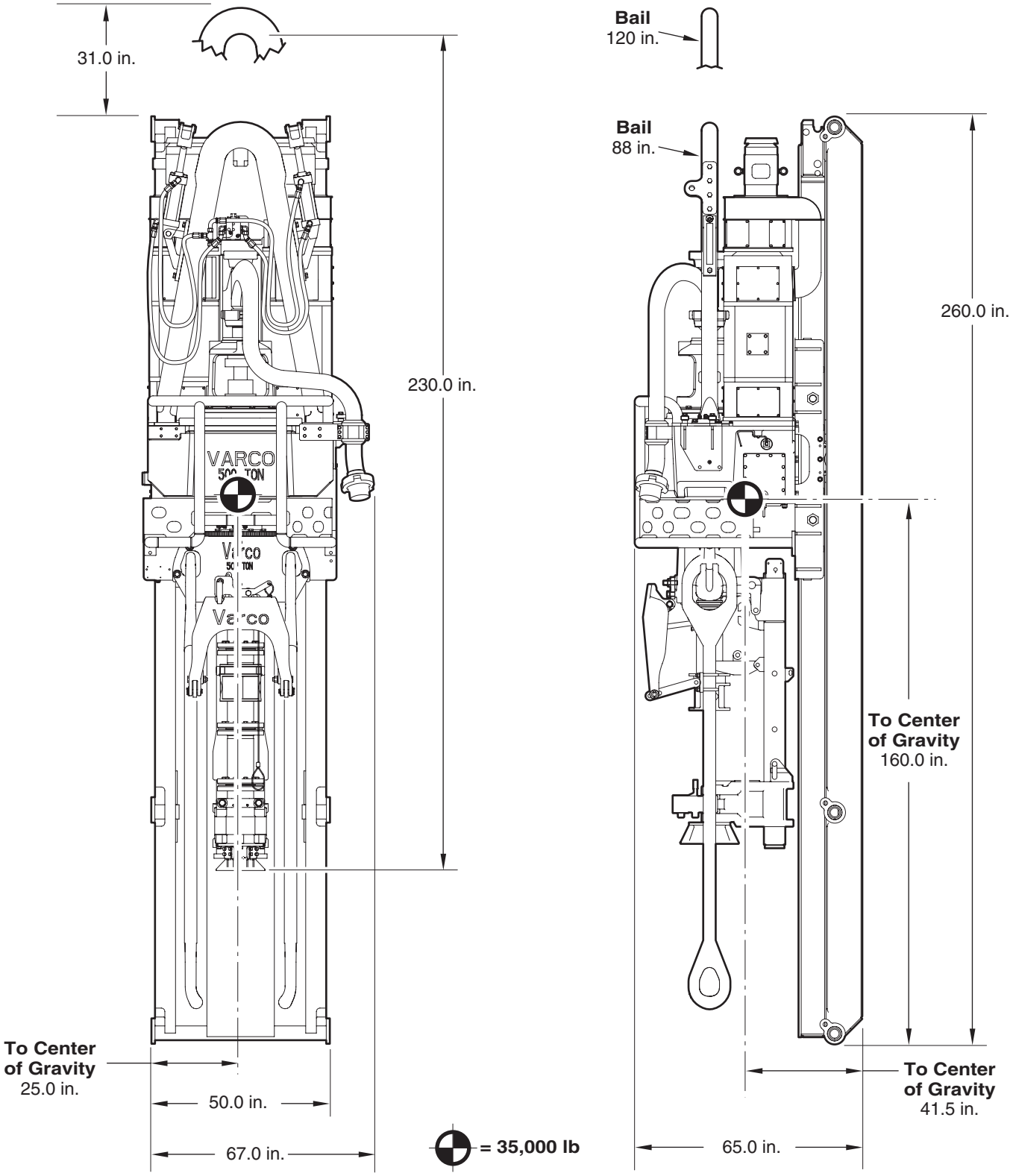

Size specifications

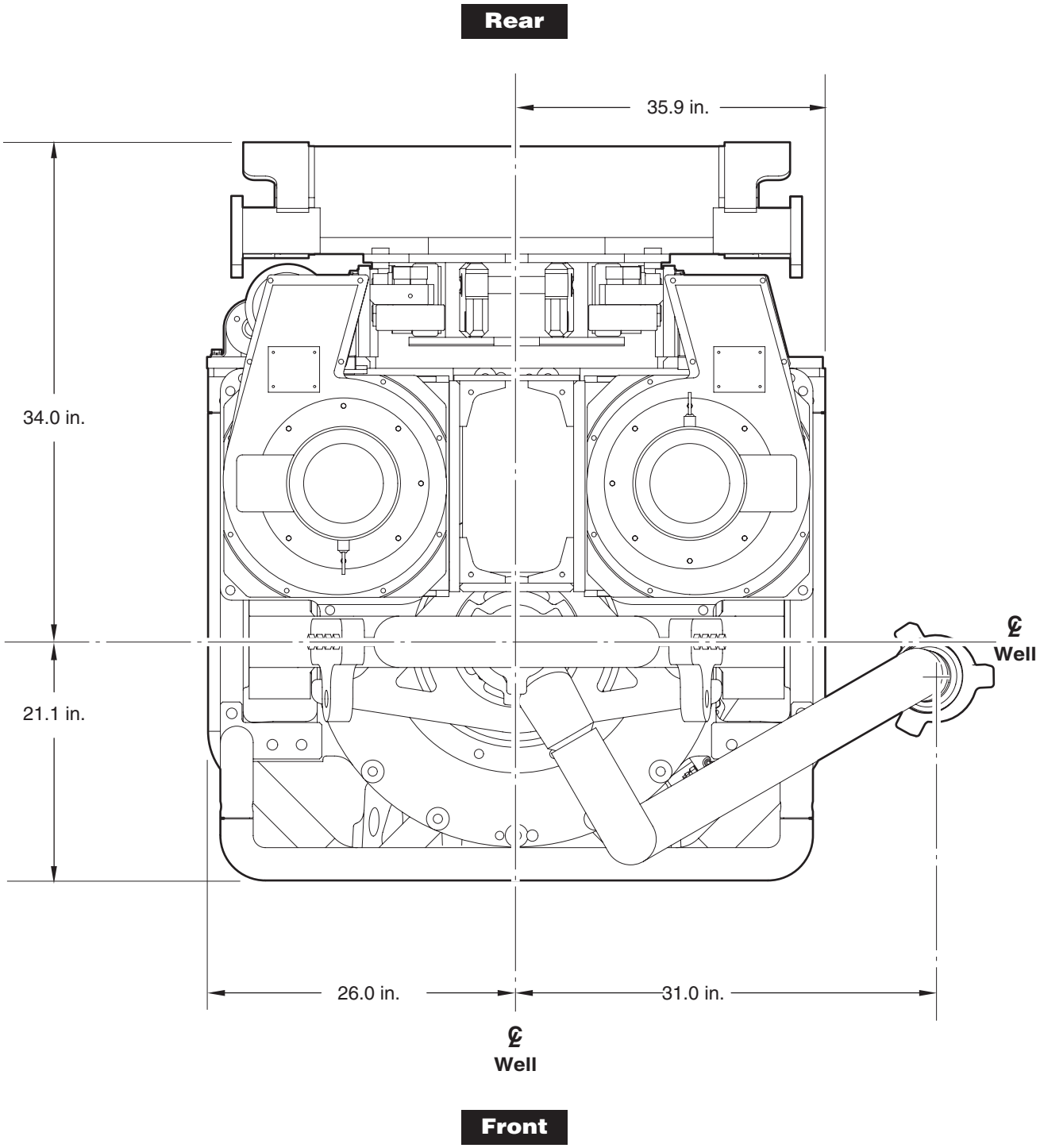

General specifications

Components	Items	Description
Top Drive	Weight	27,000 lb
	Stack-up Height	17.8 ft
	Power Requirements	700 KVA @ 575-600 VAC, 50/60 Hz
	Horsepower	800 hp
	Output torque (continuous)	37,500 ft lb (800 hp)
	Tool torque (intermittent @ stall)	55,000 ft lb
	Maximum Speed @ full power	228 rpm
	Hoisting capacity	500 ton
	Load Path	Single
	Gooseneck Entry	3" 1002 Female Union
	S-Pipe Mude Hose Connection	4" API Line Pipe or 4" 1002 Female Union
Drill Pipe	Sizes	3-1/2 in. to 5 in. (4 in. to 6-5/8 in. OD tool joint)
Pipe Handler	Type	PH-75 (75,000 ft lb backup torque)
Drilling Motor	Type	Reliance AC-575 VAC (2 x 400 hp)
Variable Frequency Drive	Type	IDM Yaskowa Drive (800 hp, 575 VAC) or Siemens (800 hp, 600 VAC)
Motor Braking	Type	Hydraulic caliper disc brakes
Motor Cooling System	Type	Local intake pressure blower
	Power	(2) 5 hp AC motors
	Speed	3,600 rpm
Gearcase	Type	Single speed, double reduction helical gear system
	Gear ratio	10.5:1 (4.38:1 optional)
Gearcase Lubrication	Type	Pressure feed
	Reservoir capacity	15 gal
	Full internal flow	10 gpm
	Oil Type	EP Grade (See chart)
	Oil Pressure	Minimum 10 psi, Maximum 30 psi
Hydraulic System	Power	10 hp, AC motor
	Flow	8.0 gpm/3.5 gpm (hi/lo)
	Reservoir capacity	25 gal
	Oil Type	Mineral based hydraulic oil
Electrical House	Size	125.4 in. x 84.0 in., 91.2 in. height (Siemens)
	Type	140.0 in. x 90.0 in., 91.0 in. height (IDM)
	Weight	9,500 lb
	Input requirement	600 VAC(50/60 Hz), or 750 VDC, or 690 VDC(50/60 Hz)

Typical mast interface

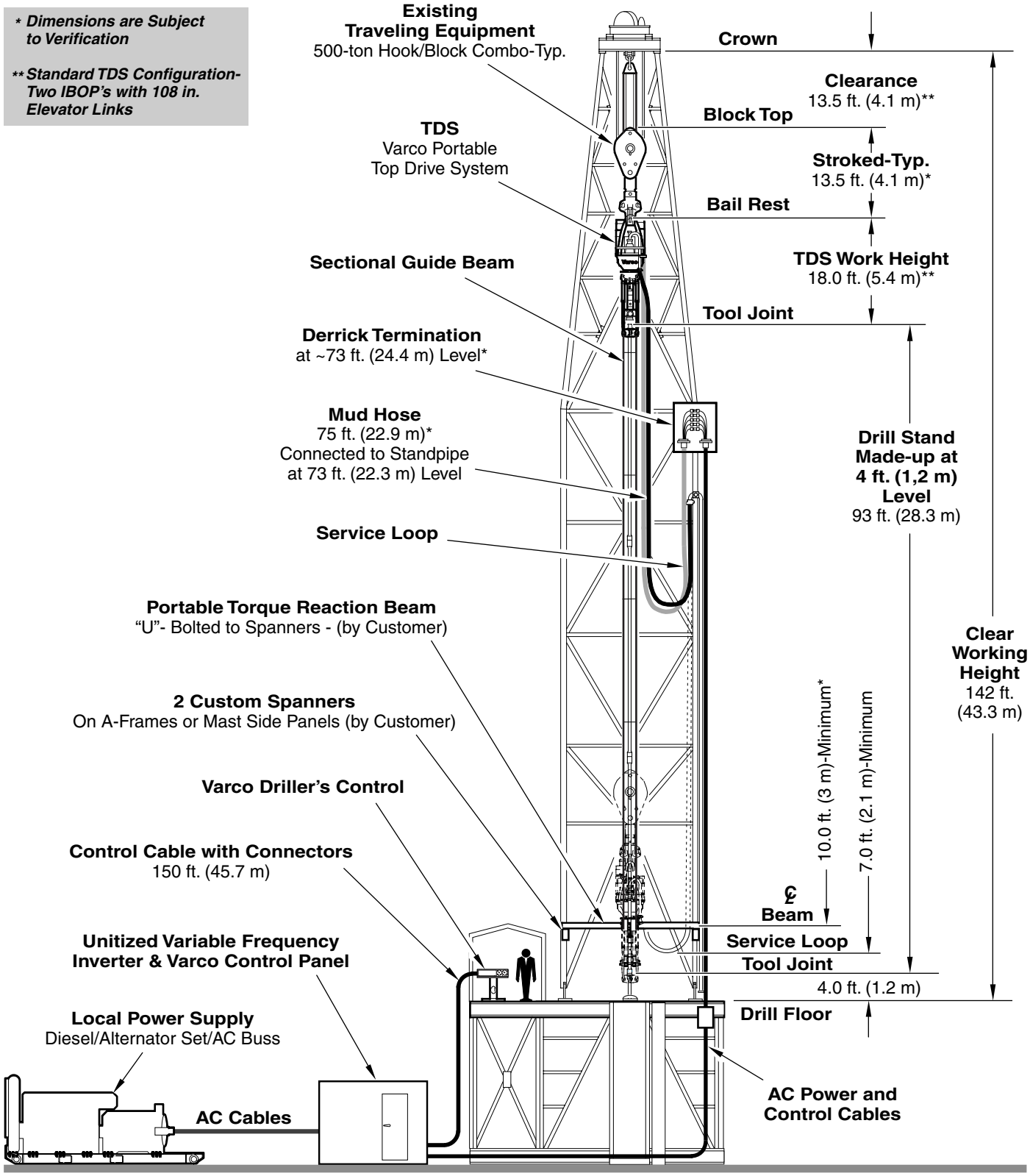

Performance curve

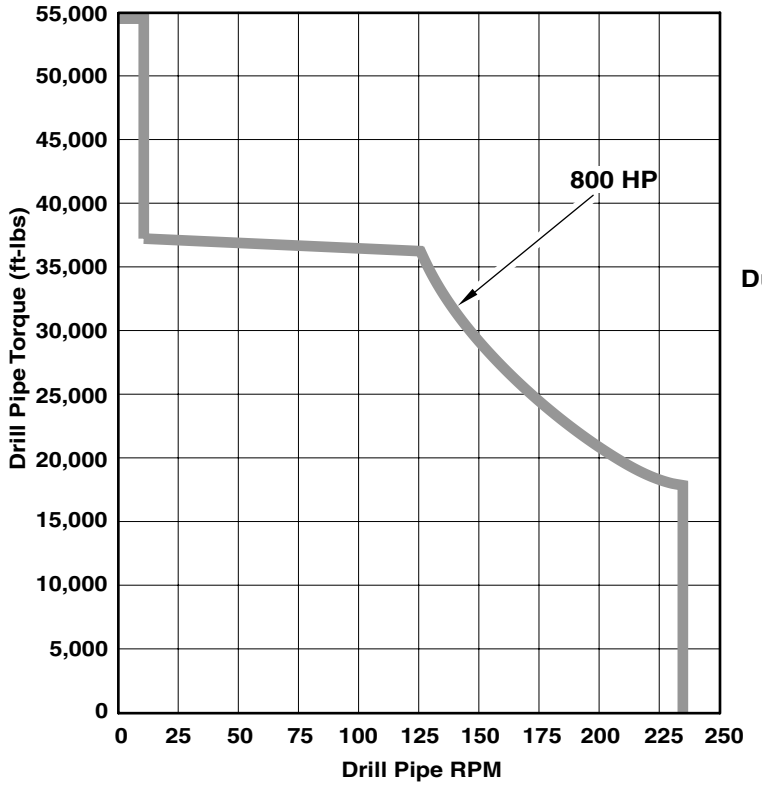

Dual AC Motor Top Drive TDS-11SA
2 x 400 = 800 HP, 500 Ton System
10.5:1 Transmission

Transmission

Selecting the proper gearbox oil

TDS transmissions operate under a combination of heavy and shock loads. Under these conditions oil tends to extrude out of the gear mesh. Keeping an effective film of oil on the gear mesh requires oil with an AGMA “extra pressure” rating (EP), and a minimum viscosity of 100 SUS at internal operating temperature.

Varco Top Drives also operate under a wide variety of ambient temperatures. Select lubrication for the TDS based on the *minimum ambient temperature* (surrounding air) to be expected before the next oil change. Under all but the most severe operating conditions, Varco recommends changing the oil every six months. Introducing an oil viscosity greater than required by the ambient temperature can:

- ❏ Damage the gearbox due to reduced oil flow
- ❏ Damage the oil pump because of excessive load

Lubrication schedule

Description	Frequency
Replace the Gearbox Oil Following Intial Break-in	Following first month of operation
Replace the Gearbox Oil and Perform an Oil Analysis *Oil viscosity should be adjusted based on expected ambient conditions for next six months*	Every 6 Months
Replace the Gearbox Oil Filter (P/N 30111013-1)	Every 3 Months
Remove, clean and replace the Magnetic Drain Plug	Yearly

The first oil change should be performed after the first month of operation since new units often contain metal contaminates and contaminates caused by initial break-in.

Transmission

Recommended gear oils

	Ambient Temperature Range		
	-6˚ to 16˚ C (20˚ to 60˚ F)	7˚ to 30˚ C (45˚ to 85˚ F)	Above 21˚ C (Above 70˚ F)
Manufacturer			
Castrol	Alpha LS-68	Alpha LS-150	Alpha LS-320
Chevron	NL Gear 68	NL Gear 150	NL Gear 320
Exxon	Spartan EP68	Spartan EP150	Spartan EP320
Gulf	EP Lube HD68	EP Lube HD150	EP Lube HD320
Mobil	MobilGear 626	MobilGear 629	MobilGear 632
Shell	Omala 150 or Spirax 80W-90 GL5	Omala 150	Omala 320 or Spirax 85W-140 GL5
Statoil	Loadway EP68	Loadway EP150	Loadway EP320
Texaco	Meropa 68	Meropa 150	Meropa 320
Total	Carter EP 68	Carter EP 150	Carter EP 320
Union	Extra Duty NL4EP 76 MP Gear Lube 80W-90 GL5	Extra Duty NL4EP	Extra Duty NL6EP 76 MP Gear Lube 85W-140 GL5
Viscosity Index			
AGMA	4EP	5EP	6EP
ISO Viscosity Grade	150	220	320

Oils of insufficient viscosity can damage gears by allowing metal to metal contact.

For minimum temperatures below 20°F, the TDS must be warmed up by rotating at a very light load (less than 200 Amps) and at very slow speeds (less than 50 rpm) until the oil temperature climbs above 20°F. If drilling conditions dictate oil temperatures below 20°F, consult Varco service center.

If the oil temperature rises above 200°F, Varco recommends shutting down or reducing drilling loads to stabilize the oil temperature below 200°F If drilling conditions dictate oil temperatures above 200°F, consult Varco service center.

Gearbox lubrication

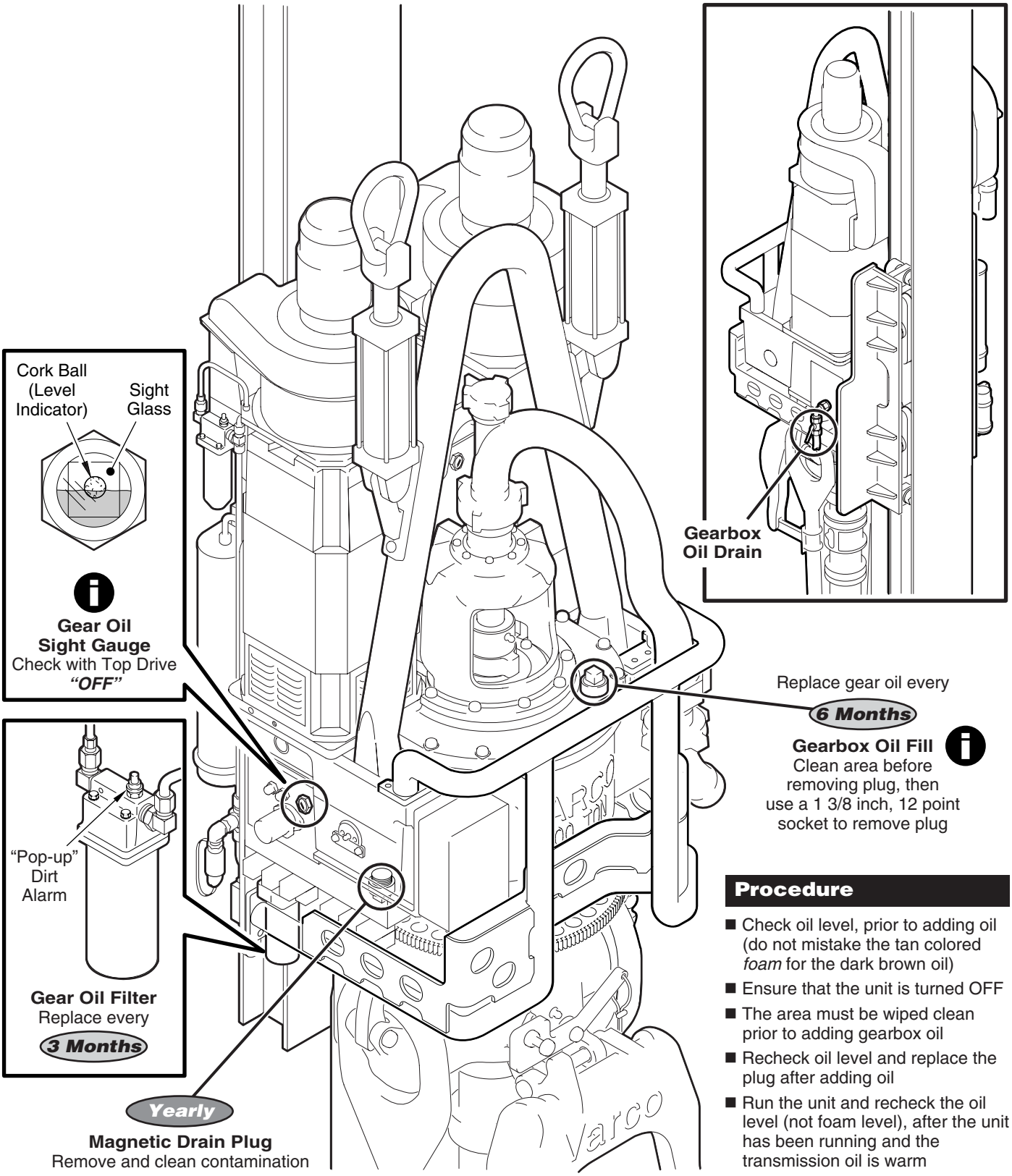

Procedure

- Check oil level, prior to adding oil (do not mistake the tan colored *foam* for the dark brown oil)
- Ensure that the unit is turned OFF
- The area must be wiped clean prior to adding gearbox oil
- Recheck oil level and replace the plug after adding oil
- Run the unit and recheck the oil level (not foam level), after the unit has been running and the transmission oil is warm

Hydraulic system

Precautions

Release all hydraulic oil pressure by bleeding accumulators before disconnecting hydraulic lines. Turn the counterbalance valve to shutdown mode to bleed the hydraulic system. Hydraulic oil under pressure can penetrate skin and cause serious injury.

Before opening the hydraulic system, thoroughly clean work area, and maintain system cleanliness by promptly capping all disconnected lines. Dirt is extremely harmful to hydraulic system components and can cause equipment failure and subsequent injury to personnel.

Use care when handling components to prevent nicking close tolerance finishes.

Use care to prevent contamination from entering the hydraulic system during maintenance activities.

Lubrication schedule

Description	Frequency
Perform Hydraulic System Oil Analysis	Every 6 Months
Replace the Hydraulic Fluid	Yearly, or Earlier Based on Oil Analysis
Replace the Hydraulic System Filter (P/N 114416-1)	Every 3 Months

Hydraulic system

Recommended hydraulic fluid

	Oil Temperature Range	
	-15˚ to 75˚ C (5˚ to 167˚ F)	-10˚ to 85˚ C (14˚ to 185˚ F)
Manufacturer		
Castrol	Hyspin AWS-32	Hyspin AWS-46
Chevron	AW Hyd oil 32	AW Hyd oil 46
Exxon	Nuto H32	Nuto H46
Gulf	Harmony 32AW	Harmony 46AW
Mobil	DTE 24	DTE 25
Shell	Tellus 32	Tellus 46
Statoil	Hydraway HMA 32	Hydraway HMA 46
Texaco	Rando oil HD32	Rando oil HD46
Total	Azolla ZS 32	Azolla ZS 46
Union	Unax AW32	Unax AW46
Viscosity Index		
ISO Viscosity Grade	32	46

Hydraulic system

Hydraulic lubrication

Procedure

- The area must be clean prior to adding hydraulic fluid
- Remove dust plug from the male quick disconnect at the TDS hydraulic oil fill
- Remove dust plug from the female quick disconnect on the lubrication kit and connect it to the male fitting
- Pump fluid until the level reaches the middle of the sight glass as shown
- After adding fluid, replace the dust plugs

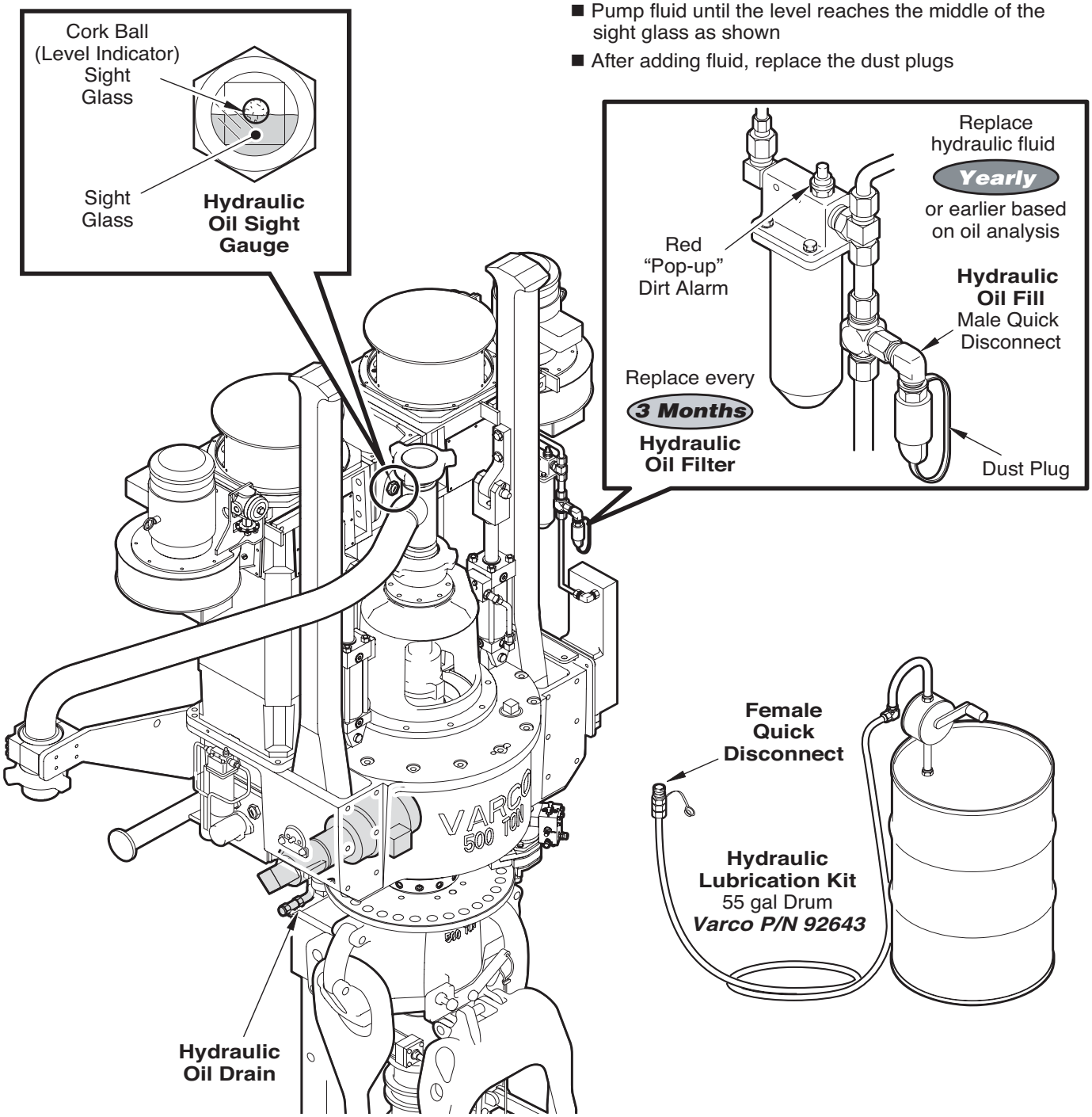

Motors

Varco recommends that lubrication of all AC motors should be done by the rig electrician.

Lubrication schedule

Description	No. of Points	Frequency	Type
Lubricate the AC Drilling Motor	4	Every 3 Months	Motor Grease
Lubricate the AC Blower Motor	4	Every 3 Months	Motor Grease
Lubricate the Hydraulic Pump AC Motor	2	Every 3 Months	Motor Grease

Recommended motor grease

Manufacturer	Motor Grease
Chevron	Black Pearl EP2 ***(Do Not Substitute)***

Motors

Motor lubrication

Apply motor grease to designated grease fittings with hand grease gun

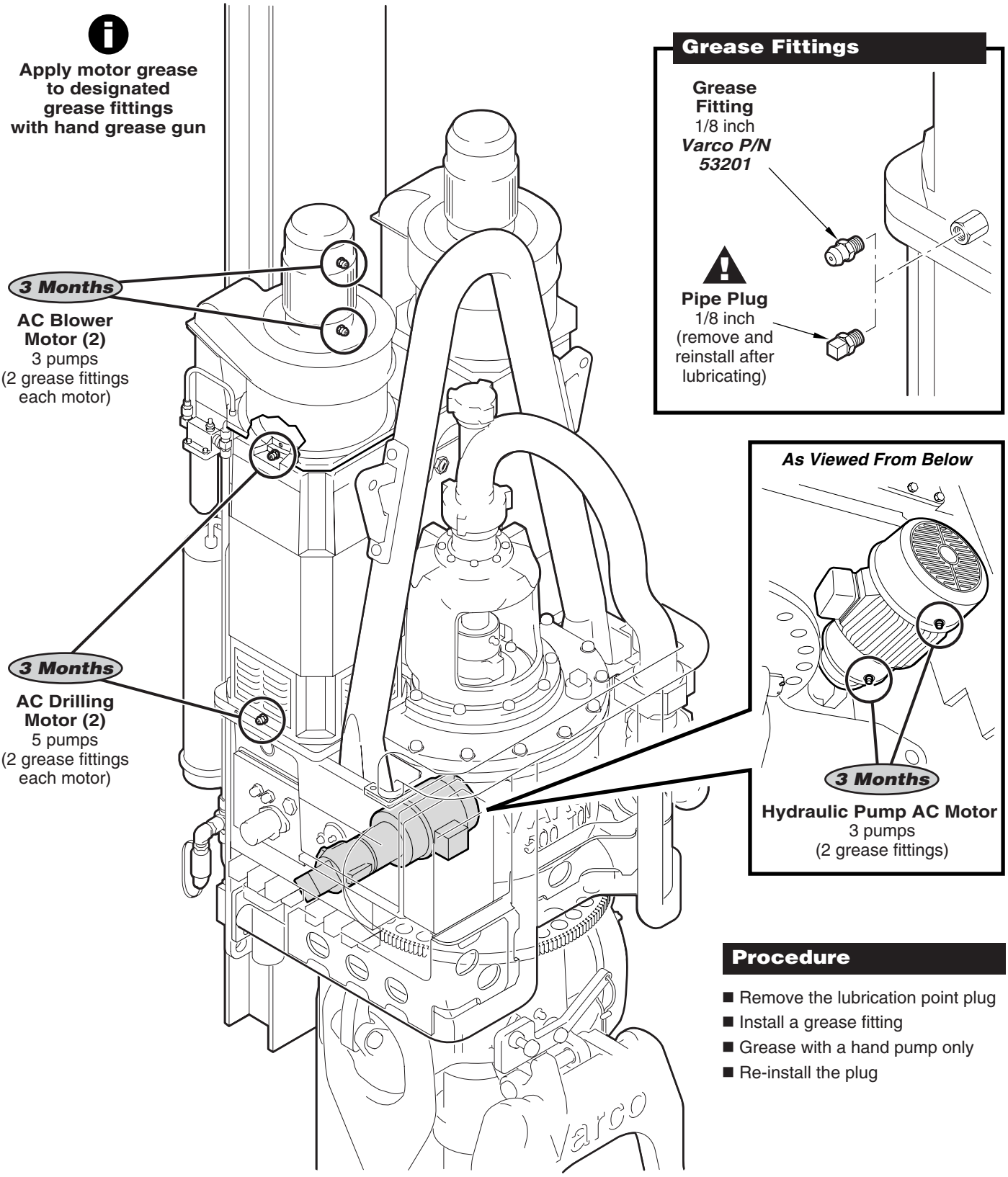

Procedure

- Remove the lubrication point plug
- Install a grease fitting
- Grease with a hand pump only
- Re-install the plug

General purpose lubrication

The lubrication intervals described in this manual are based on lubricant supplier recommendations. Severe conditions such as extreme loads or temperature, corrosive atmosphere, etc., may require more frequent lubrication.

Worn bushings, binding parts, rust accumulations, and other abnormal conditions indicate more frequent lubrication is necessary. Be careful not to over lubricate parts. For example, too much grease forced into a fitting can pop out a bearing seal. Over lubrication can also affect safety since over lubricated parts can drip, creating a potential slipping hazard for personnel.

Lubrication schedule

Description	No. of Points	Frequency	Type
Washpipe Assembly	1	Twice Daily	General Purpose Grease
IBOP Actuator Yoke, Cylinder Pins	5	Daily	General Purpose Grease
IBOP Actuator Cranks	2	Daily	General Purpose Grease
Stabilizer Bushing	4	Daily	General Purpose Grease
Clamp Cylinder Gate	2	Daily	General Purpose Grease
Upper Bonnet Seal	1	Weekly	General Purpose Grease
Bail Pins	2	Weekly	General Purpose Grease
Rotating Link Adapter Gear	–	Weekly	General Purpose Grease
Rotating Link Adapter	2	Weekly	General Purpose Grease
Shot Pin Assembly	1	Weekly	General Purpose Grease
Upper IBOP Valve	1	Weekly	General Purpose Grease
Torque Arrestor at Clamp Cylinder	–	Weekly	General Purpose Grease
Wireline Adapter	2	Weekly	General Purpose Grease
Elevator Link Eyes	4	Weekly	Pipe Dope
Traveling Block Sheaves	3	Monthly	General Purpose Grease
Guide Dolly Runner Shaft	12	Every 6 mos.	General Purpose Grease

General purpose lubrication

Recommended lubricants

	Ambient Temperature Range	
	Below -20° C (Below -4° F)	**Above -20° C** (Above -4° F)
Manufacturer		
Castrol	N/R	MP Grease
Chevron	Avi-Motive W	Avi-Motive
Exxon	Lidok EP1	Lidok EP2
Gulf	Gulf Crown EP31	Gulf Crown EP32
Mobil	Mobilux EP1	Mobilux EP2
Shell	Alvania EP1	Alvania EP2
Statoil	Uniway EP1N	Uniway EP2N
Texaco	Multifak EP1	Multifak EP2
Total	Multis EP1	Multis EP2
Union	Unoba EP1	Unoba EP2
Viscosity Index		
NGLI	1	2

General purpose lubrication

General lubrication

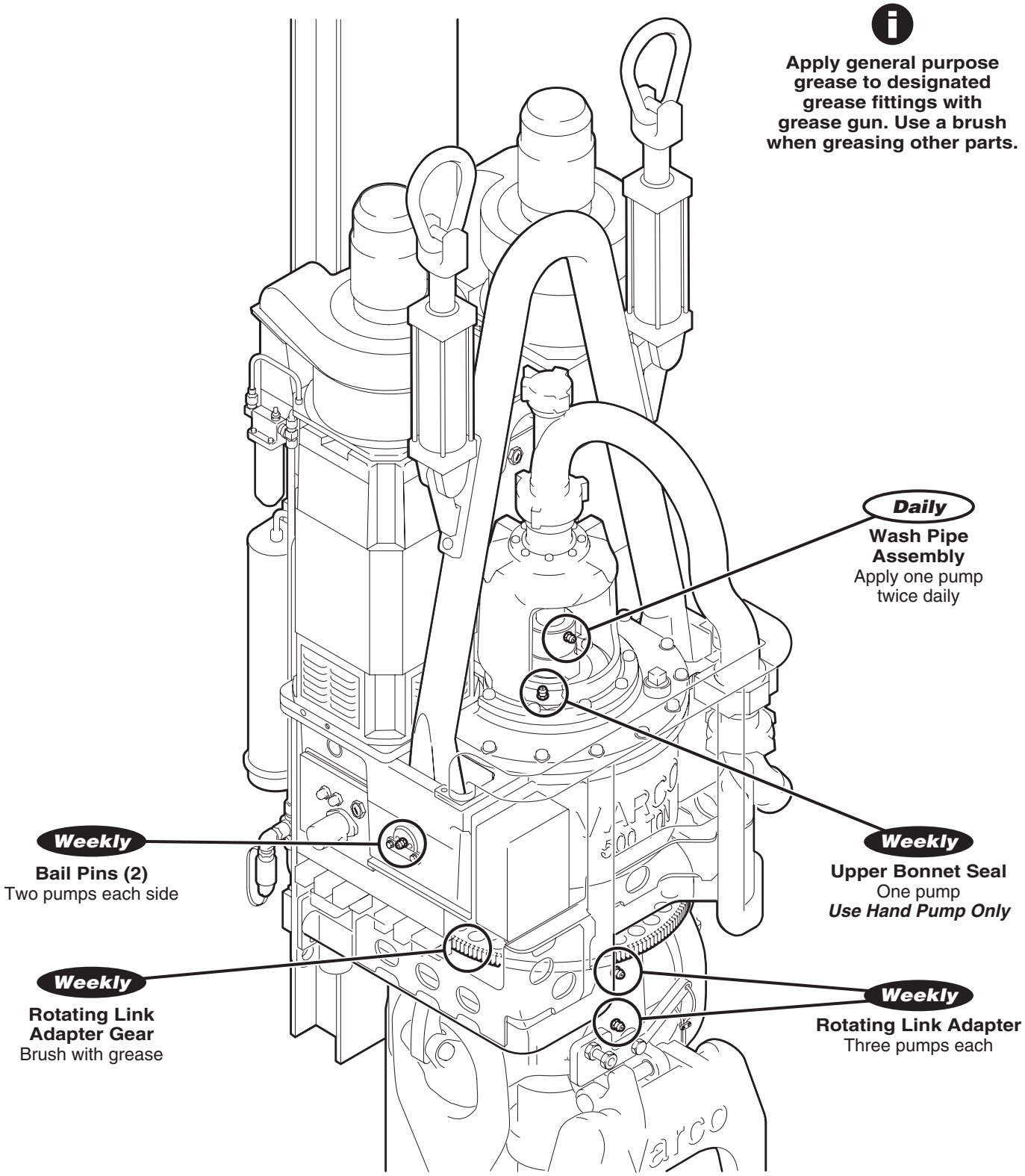

General purpose lubrication

General lubrication

Apply general purpose grease to designated grease fittings with grease gun. Use a brush when greasing other parts.

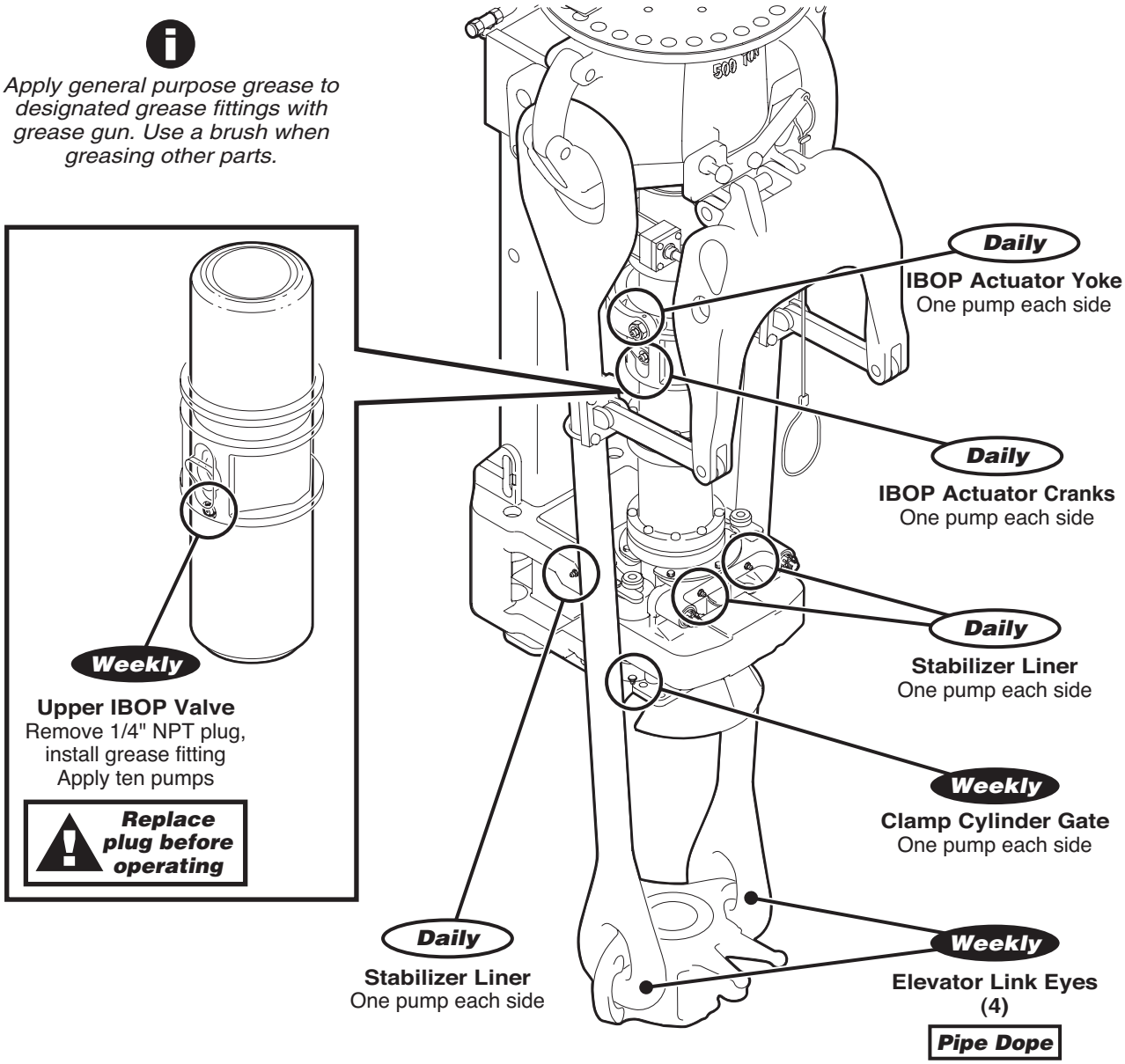

General purpose lubrication

General lubrication

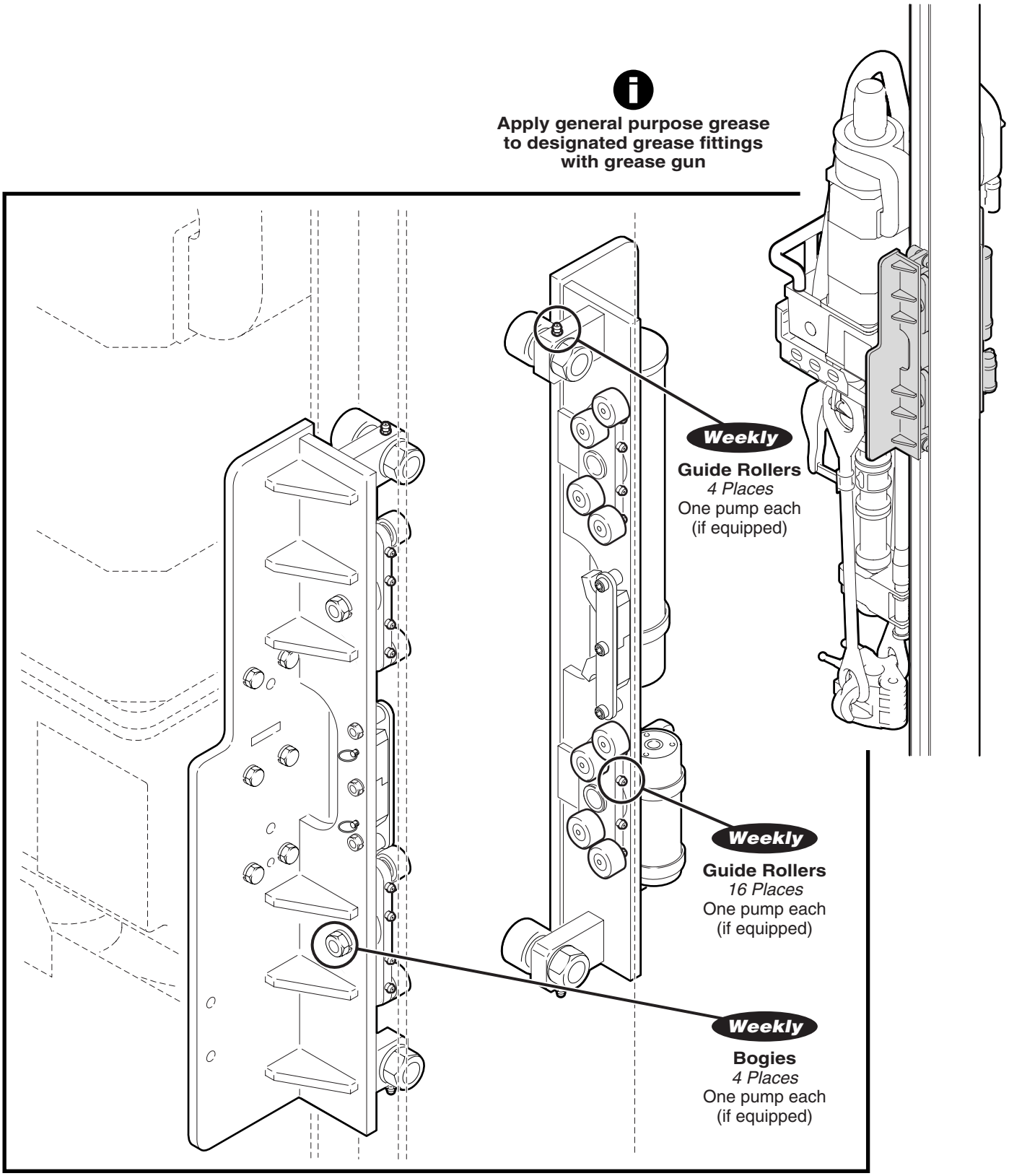

Illustrated index

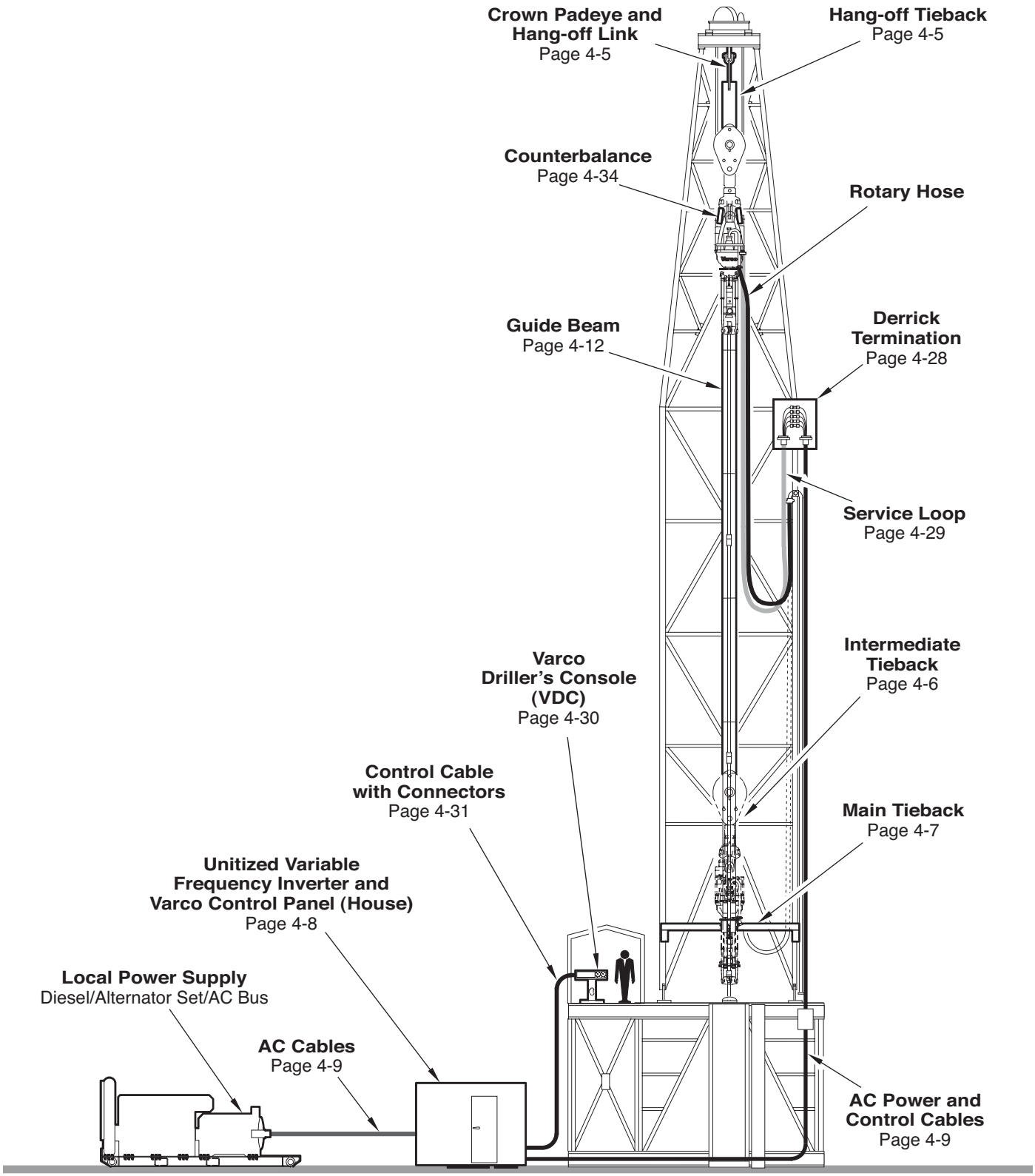

Preinstallation

Preparation

The TDS interfaces with the rig's hoisting system and electrical power system. Derrick and electrical system modifications are required when installing the TDS on existing rigs.

For derricks that handle triples, the required top drive travel is about 100 ft. compared to about 75 ft. when using a Kelly. It is generally necessary to replace the regular rotary hose (which is normally 60 ft. long) with a 75 ft. hose, and extend the standpipe height to approximately 73 ft.

Although many rig floor layouts are possible, installing the guide beam on the drawworks side of the derrick, or mast, and opposite the V-door is an ideal arrangement for handling tubulars from the V-door.

The location of the electrical loop and mud hose is an important installation consideration for pipe setback purposes, to ensure proper clearance and to help prevent wear to the service loop and mud hose. Other important installation considerations include the location of:

- ❏ The casing stabbing board
- ❏ Floor and derrick accessories
- ❏ Drawworks fastline
- ❏ Guide beam hang-off bracket
- ❏ Torque reaction beam
- ❏ Mud stand pipe extension
- ❏ Varco drillers console location
- ❏ Variable frequency inverter/Varco control panel location

To successfully install the TDS-11SA, it is critical to know the precise height and length of the travelling equipment, as well as the location of the tie backs. Refer to the rig general arangement drawing for these critical dimensions.

Preinstallation

Installing the crown padeye and hang-off link

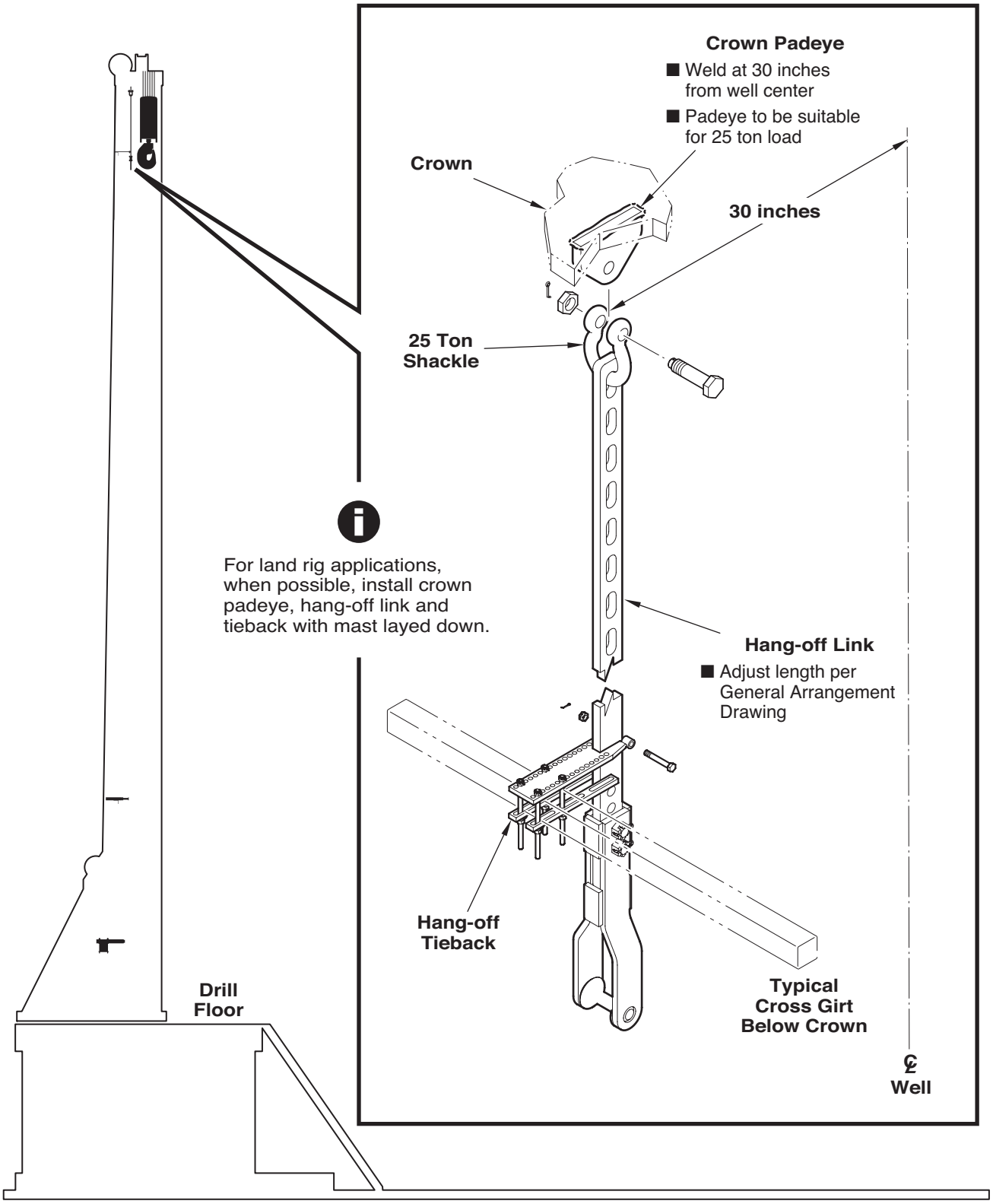

Preinstallation

Installing the intermediate tieback

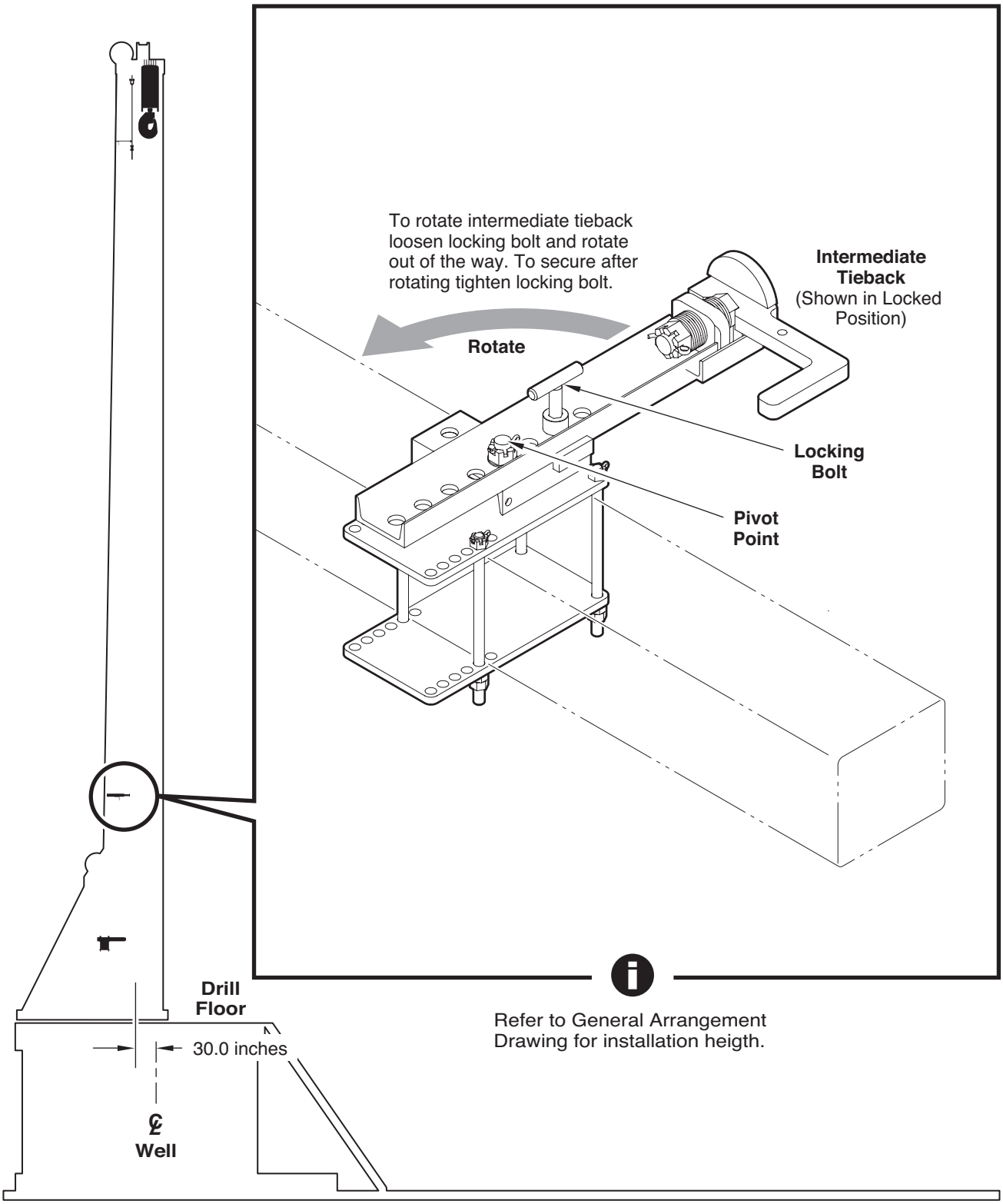

Refer to General Arrangement Drawing for installation heigth.

Preinstallation

Installing the main tieback

Procedure

- Install the main spreader beam at the appropriate distance from well center
- Install the tieback plate and tieback link
- Torque and lock wire all bolts

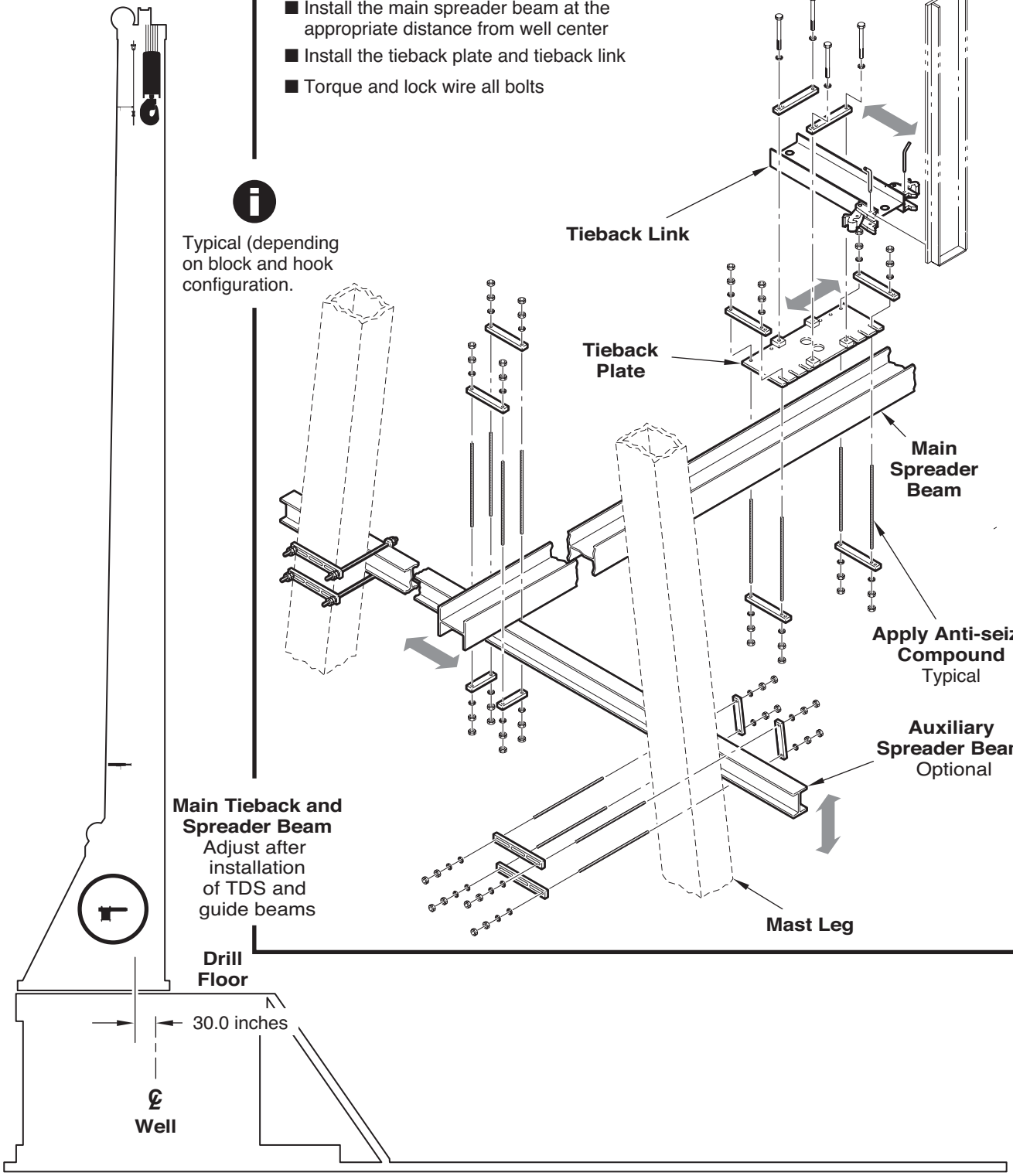

Preinstallation

Locating the control house

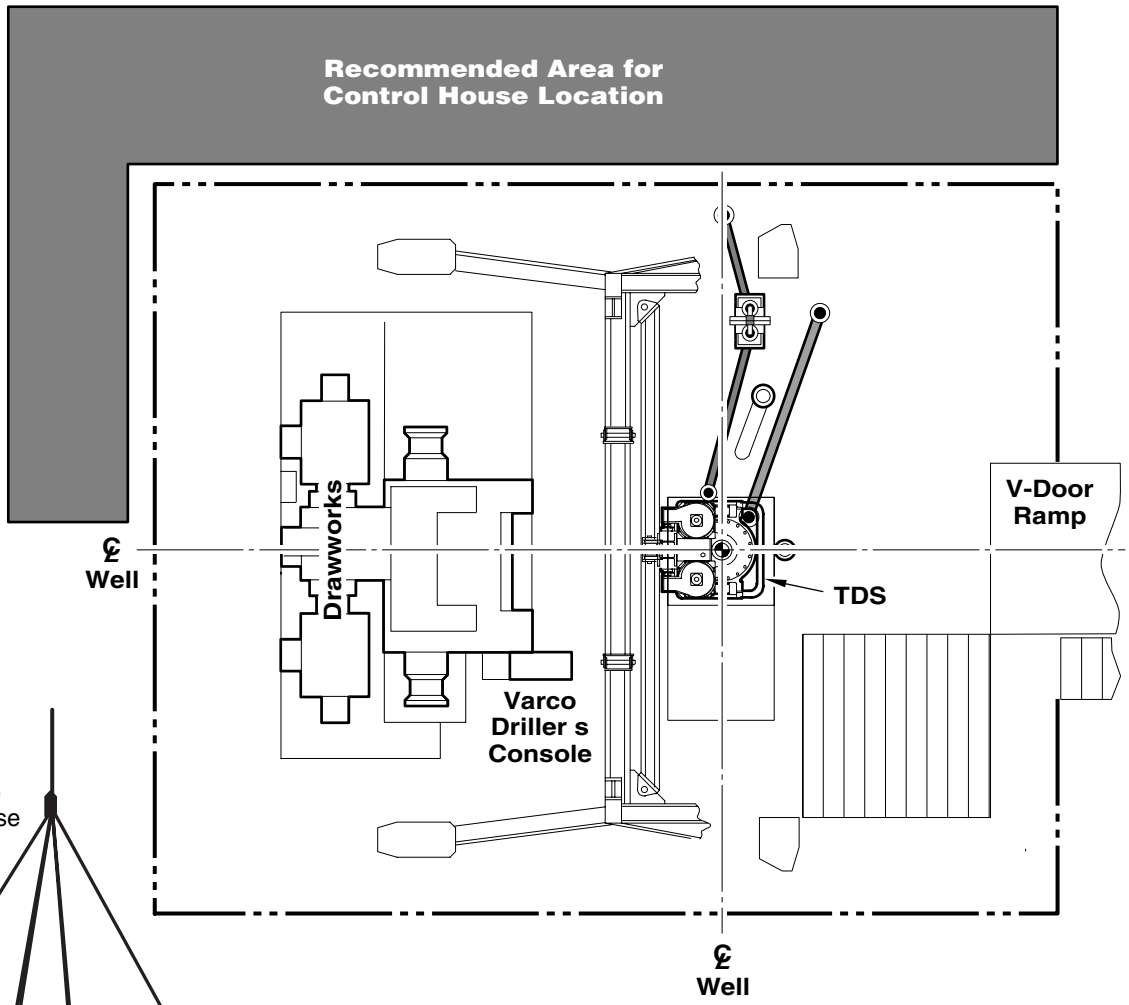

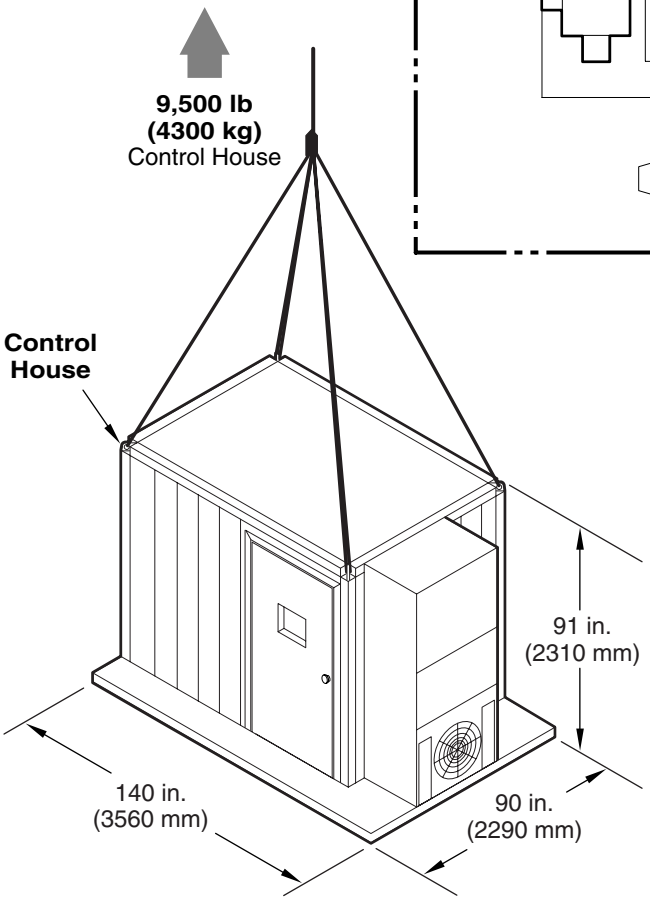

Typical installation

Recommendations

- Position the control house off-driller s side or behind the drawworks
- Position as close to derrick plate as possible to minimize cable lengths
- Ensure a safe distance from direct sources of heat (i.e. diesel engines, general exhausts)
- Location of the control house must ensure accessibility from all sides
- Do not expose the control house to H_2S

Preinstallation

Installing power cables

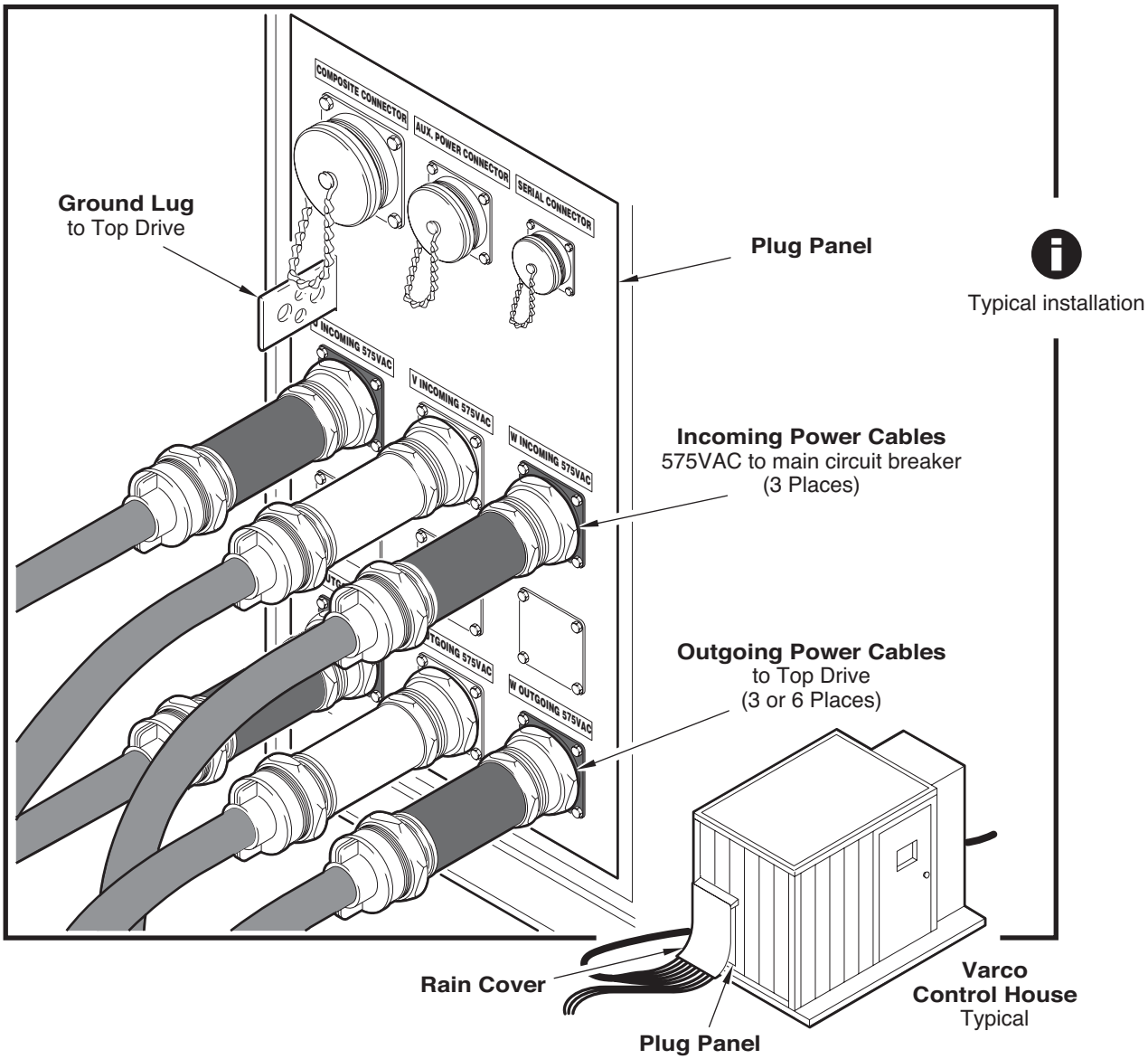

Procedure

- Clean all connector contacts
- Connect the power cables with the isolation circuit breaker turned ***OFF***
- Connect cables in accordance with the electrical schematic provided in the *Technical Drawings* book
- Lockwire all connector nuts
- Earth the control house with the Varco Ground Rod Kit (See page 4-10)

Preinstallation

Earthing the control house (land rigs)

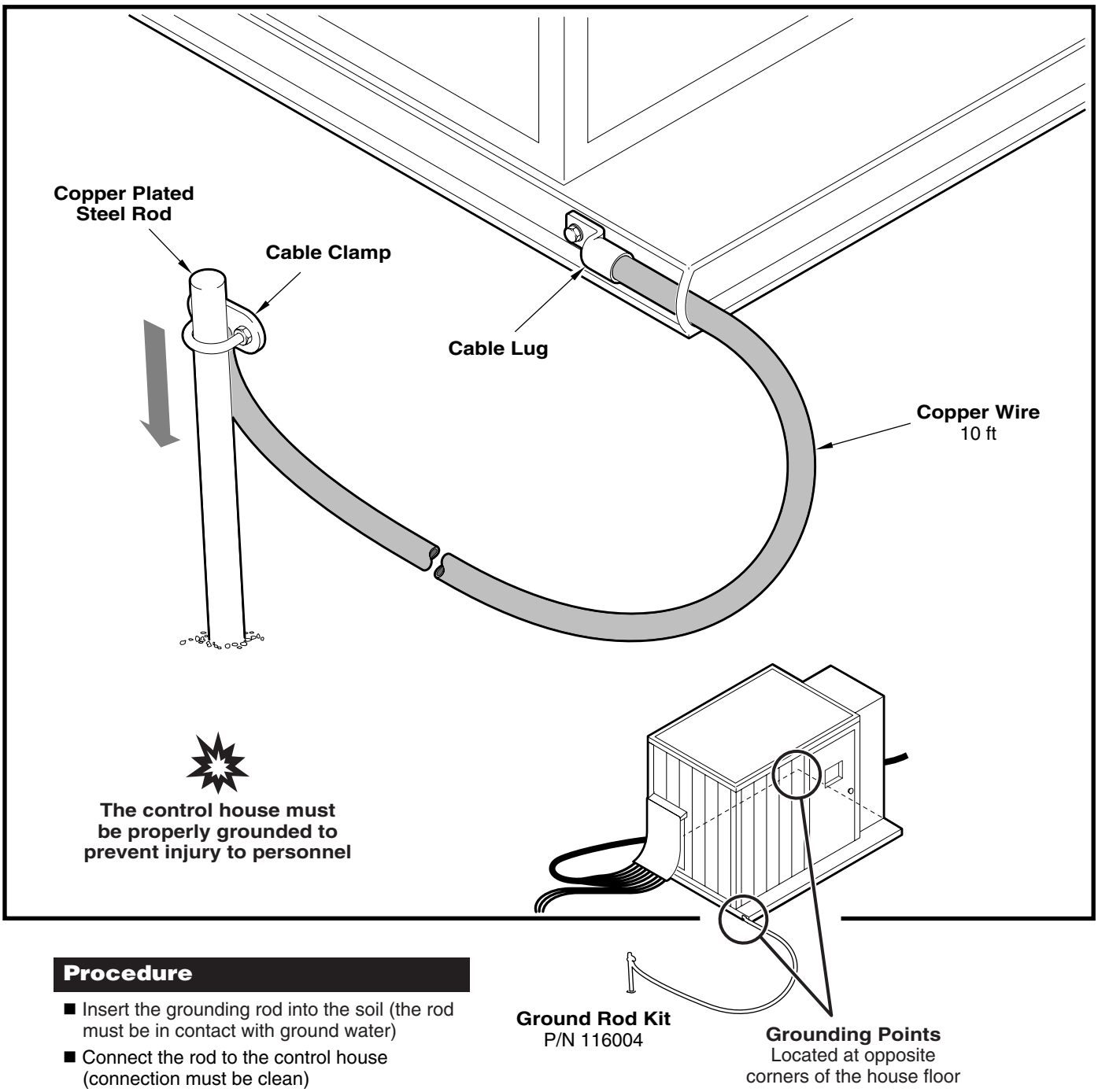

Procedure

- Insert the grounding rod into the soil (the rod must be in contact with ground water)
- Connect the rod to the control house (connection must be clean)

For offshore installations the control house must be grounded to the ground point on the rig structure

Preinstallation

Checklist

The following assumes that all pre-installation planning and rig-up is complete prior to installation of the guide beam assembly and TDS. This includes:

- ❏ Make sure the derrick/mast is vertical, *with the block over the center of the rotary table*.
- ❏ Derrick/mast modifications are completed (if required) and the guide bean support bracket and torque reaction beam are installed per recomendations on the general arangement drawing.
- ❏ The service loop bracket is installed in the derrick/mast.
- ❏ The control panel and frequency drive are installed.
- ❏ Rigging of tong lines, etc. is inspected to ensure that they will not foul with the TDS.
- ❏ The hook or adaptor becket is installed. The hook should open toward the drawworks when possible.

Installation

Raising the top guide beam section to the drill floor

Procedure

- Locate the top guide beam section near the V-Door
- Ensure the hoist carriage is free to slide the entire length of the guide beam
- Ensure the latch moves freely
- Attach lifting slings to the lifting eyes of the hoist carriage
- Eusure the transport shipping pins are in place and secure
- Hoist the guide beam section to the drill floor using a tugger line with a backup line to tail
- Remove tugger line after top guide beam is in position on drill floor

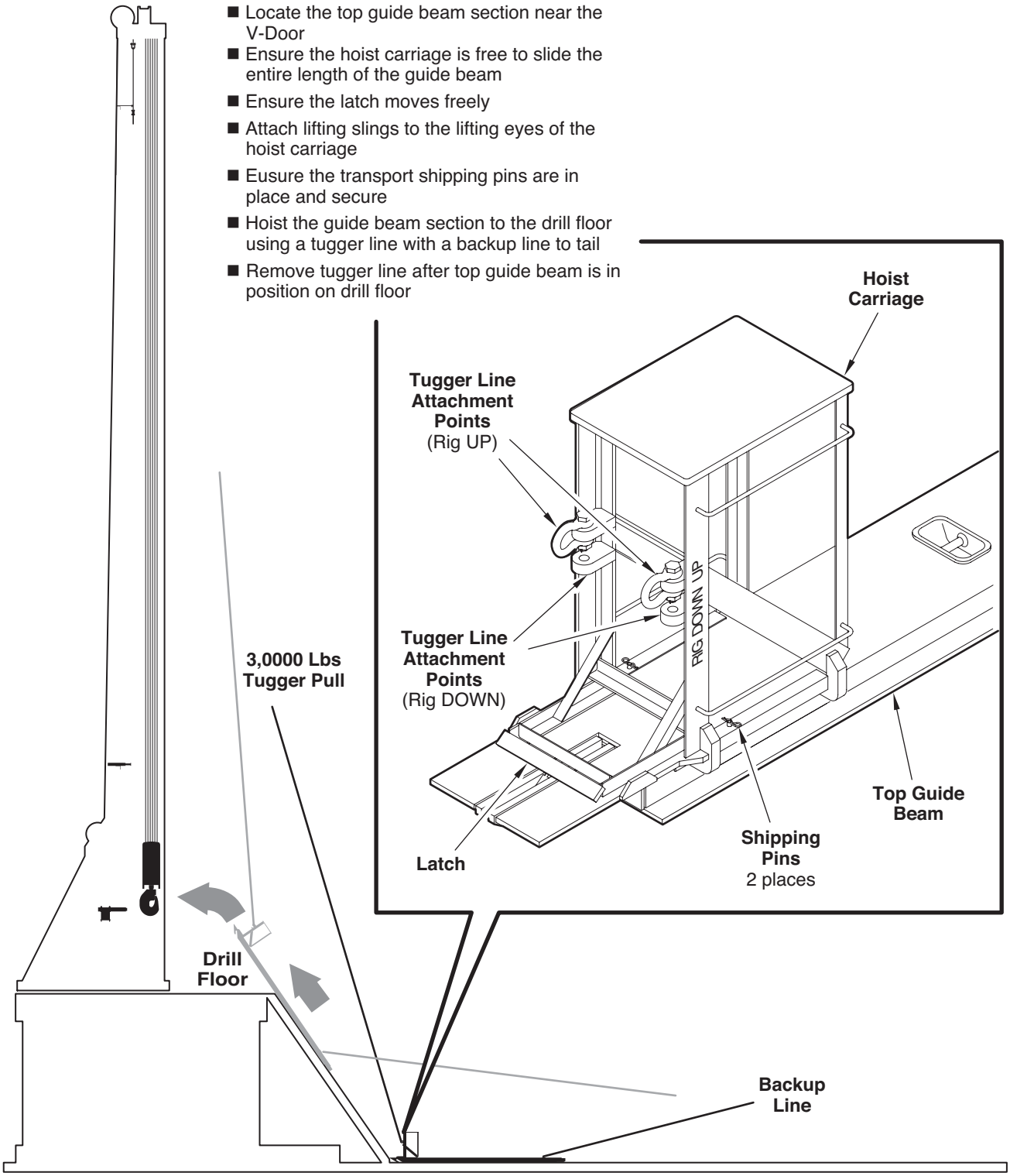

Installation

Attaching the carriage sling to the hook

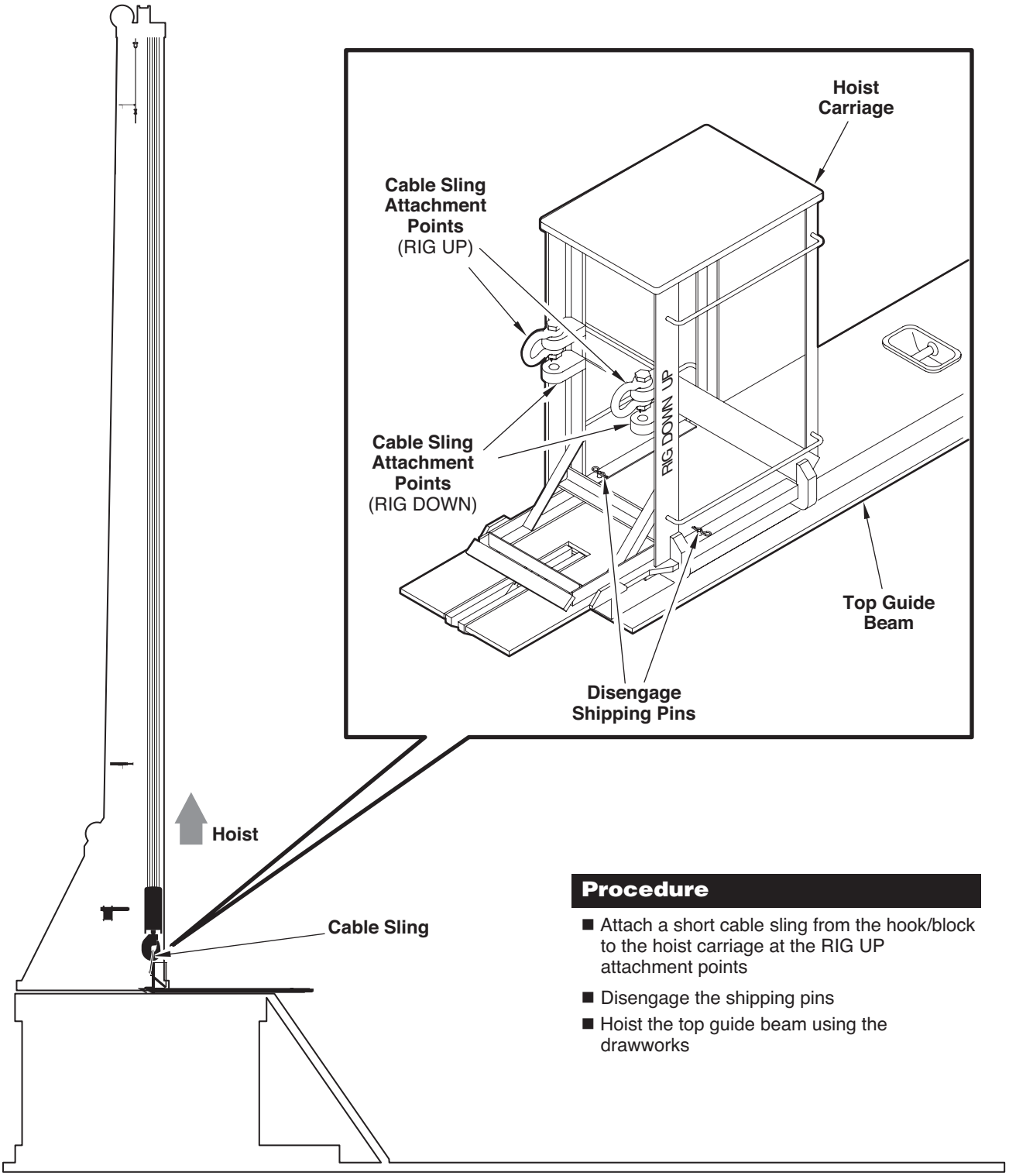

Procedure

- Attach a short cable sling from the hook/block to the hoist carriage at the RIG UP attachment points
- Disengage the shipping pins
- Hoist the top guide beam using the drawworks

Installation

Moving guide beam sections

Procedure

- Locate the remaining guide beam sections near the V-Door
- Attach tugger lines to the lifting eyes of the first guide beam section to be hoisted
- Hoist the guide beam section to the drill floor using the rear tugger line or tailing line to stabilize and balance the guide beam

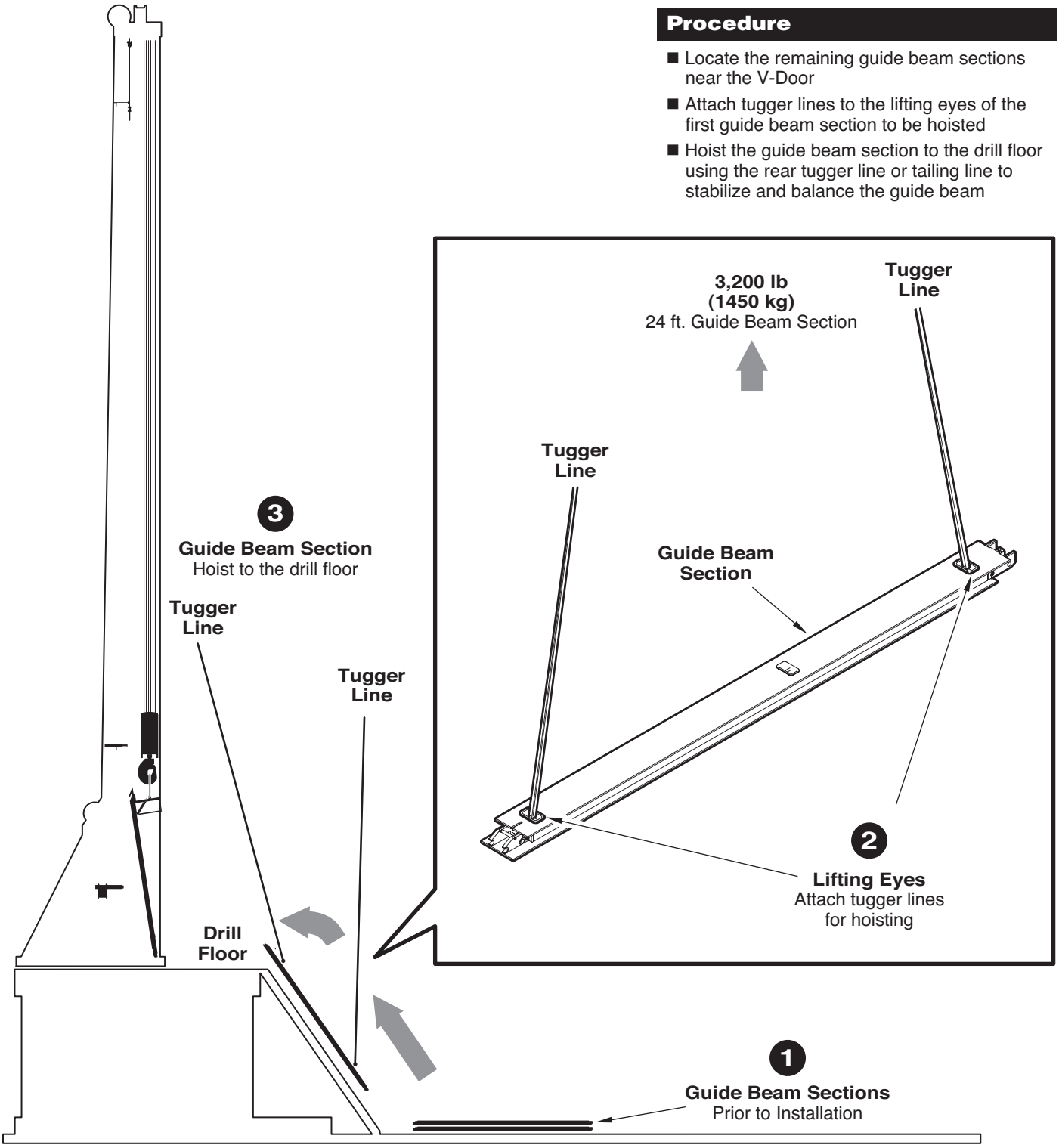

Installation

Hooking the first guide beam section

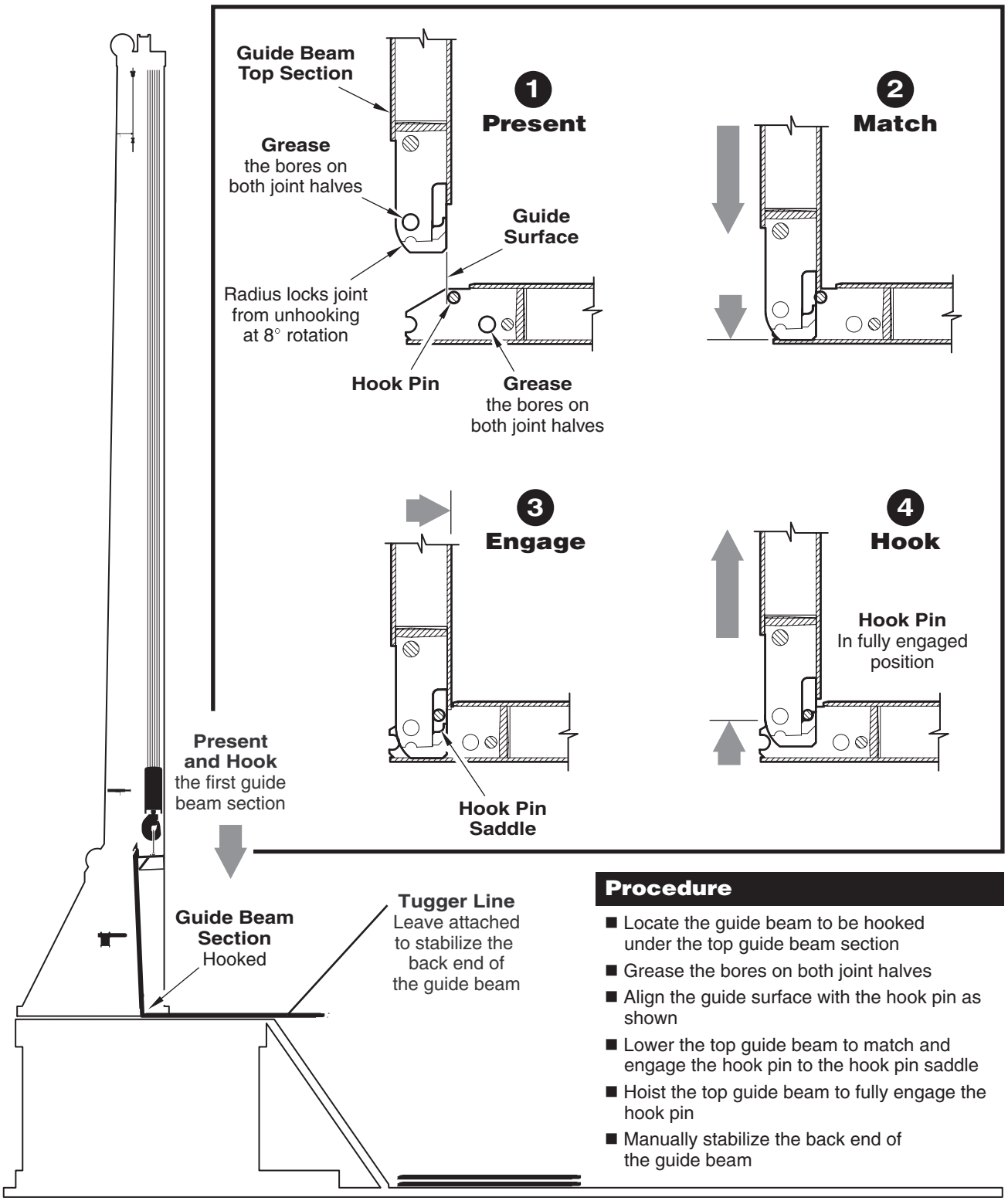

Procedure

- Locate the guide beam to be hooked under the top guide beam section
- Grease the bores on both joint halves
- Align the guide surface with the hook pin as shown
- Lower the top guide beam to match and engage the hook pin to the hook pin saddle
- Hoist the top guide beam to fully engage the hook pin
- Manually stabilize the back end of the guide beam

Installation

Hoisting the first guide beam section

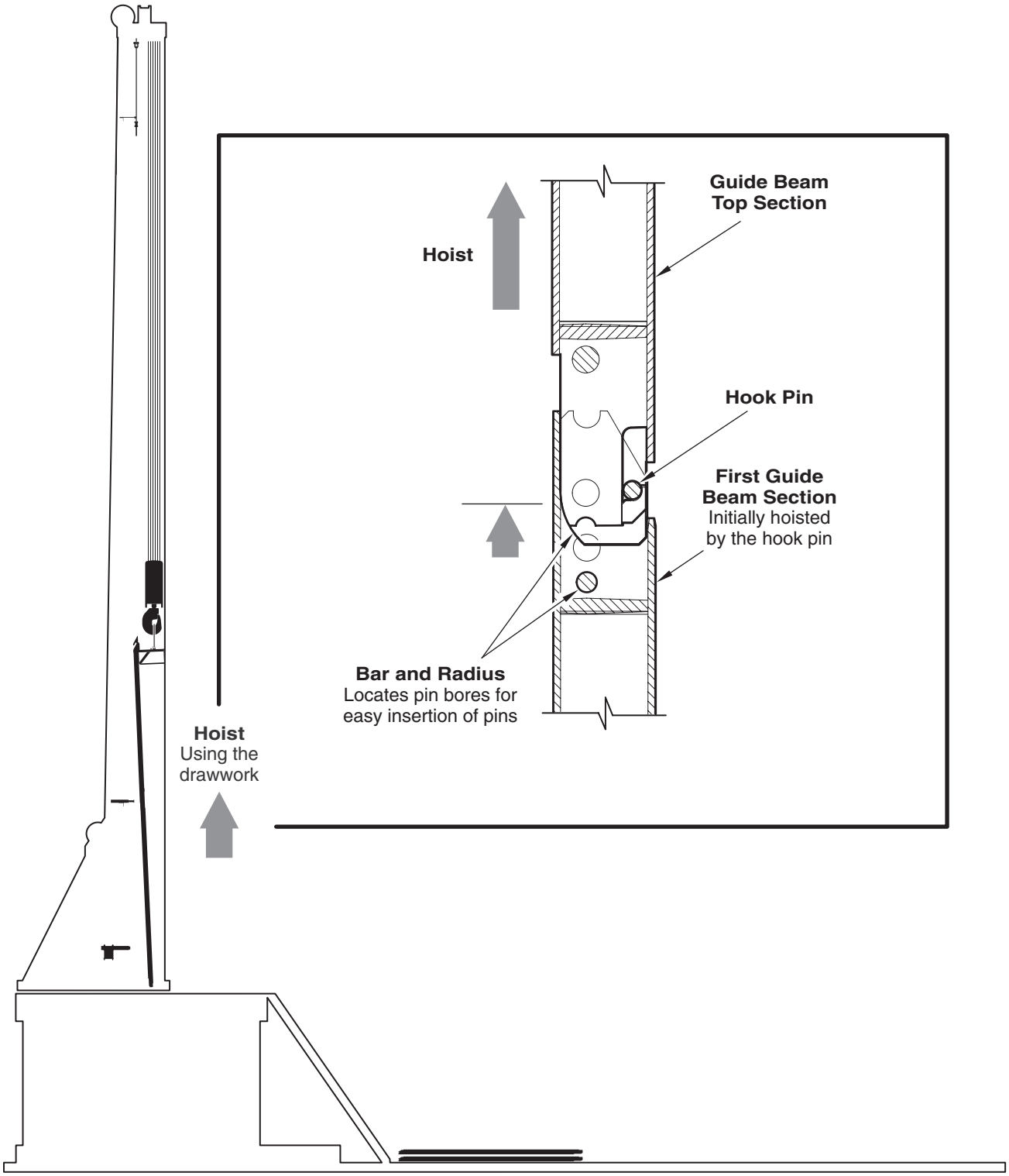

Installation

Stabbing and pinning the first guide beam section

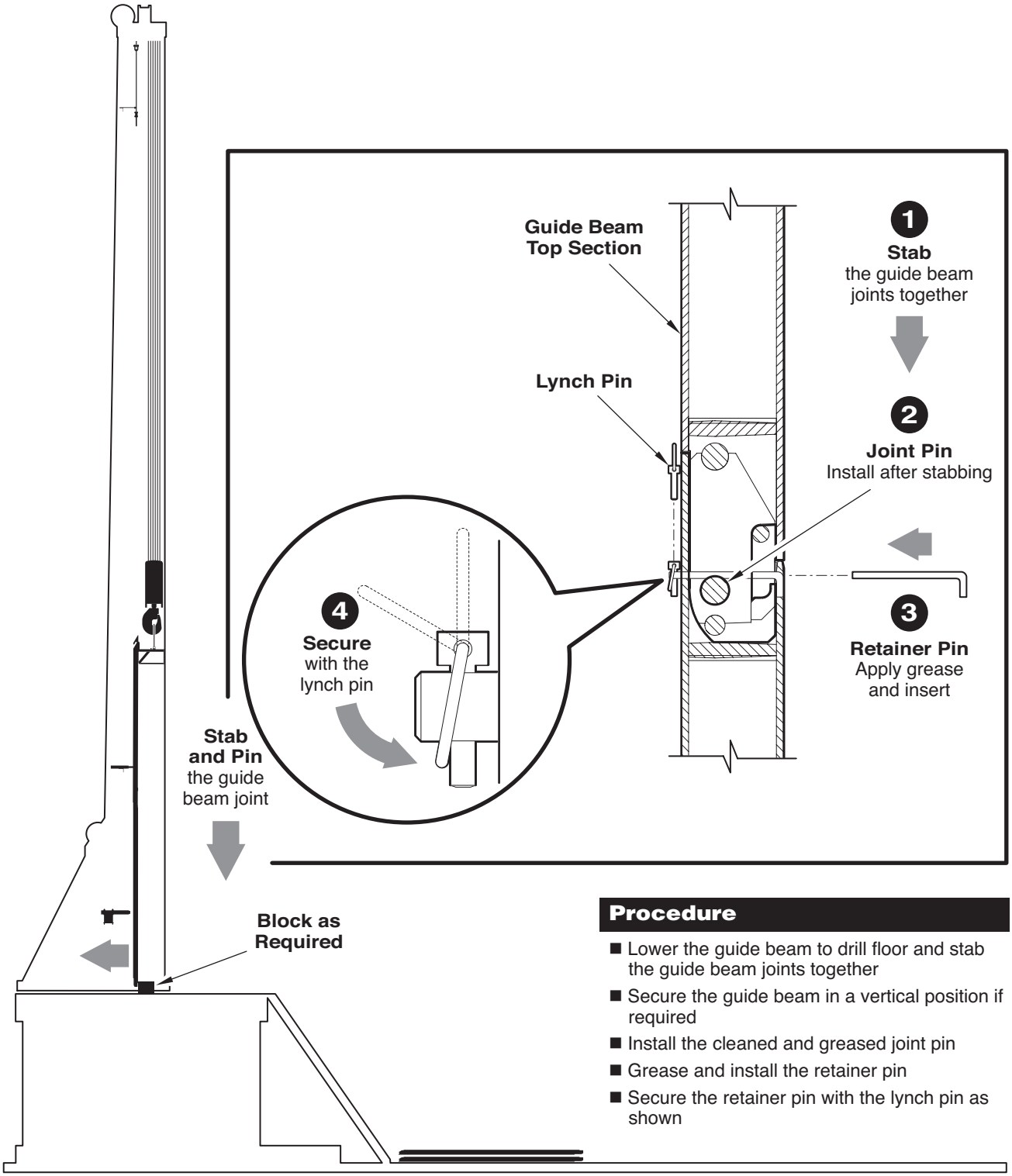

Procedure

- Lower the guide beam to drill floor and stab the guide beam joints together
- Secure the guide beam in a vertical position if required
- Install the cleaned and greased joint pin
- Grease and install the retainer pin
- Secure the retainer pin with the lynch pin as shown

Installation

Completing guide beam installation

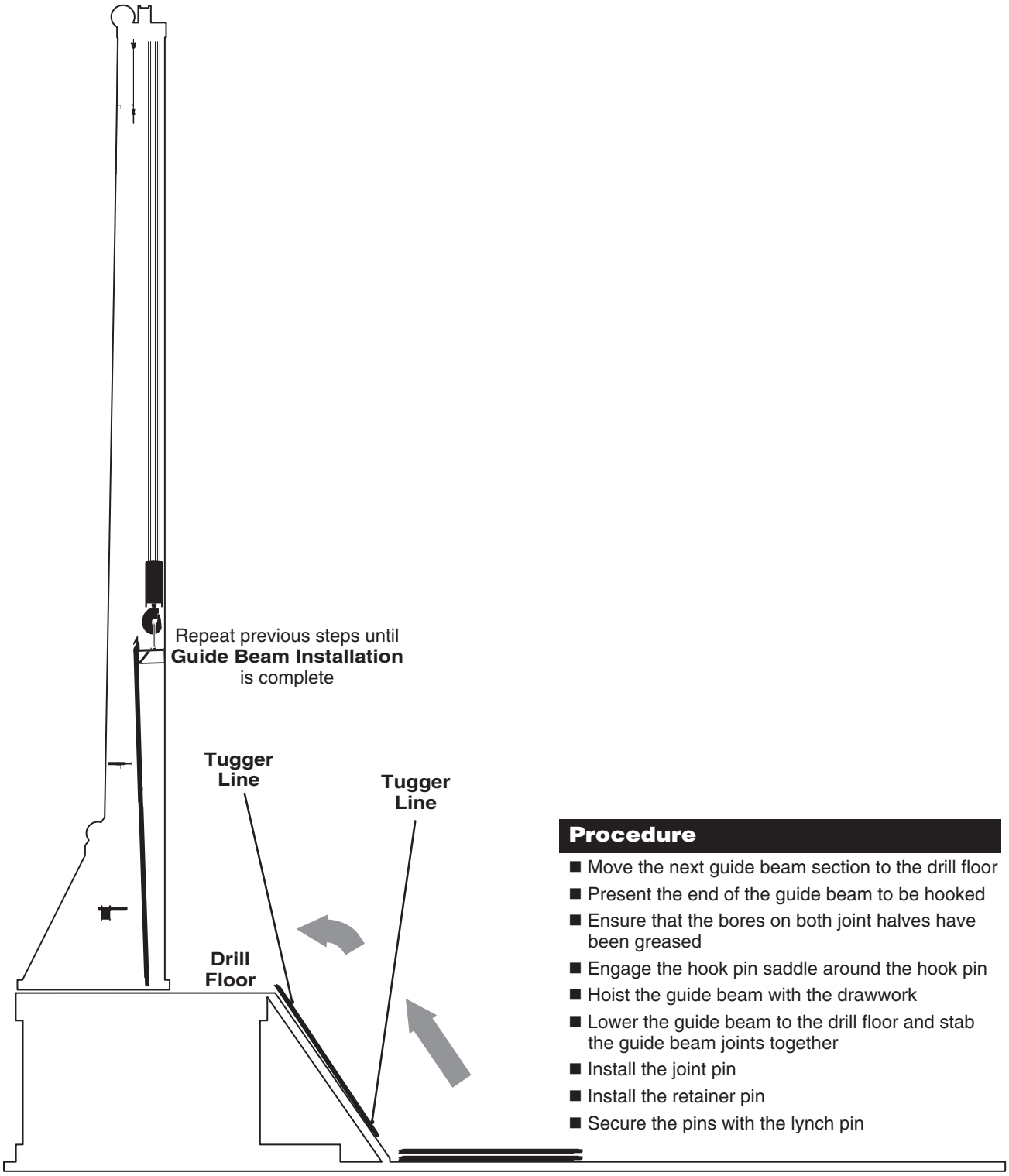

Procedure

- Move the next guide beam section to the drill floor
- Present the end of the guide beam to be hooked
- Ensure that the bores on both joint halves have been greased
- Engage the hook pin saddle around the hook pin
- Hoist the guide beam with the drawwork
- Lower the guide beam to the drill floor and stab the guide beam joints together
- Install the joint pin
- Install the retainer pin
- Secure the pins with the lynch pin

Installation

Hoisting and attaching the guide beam

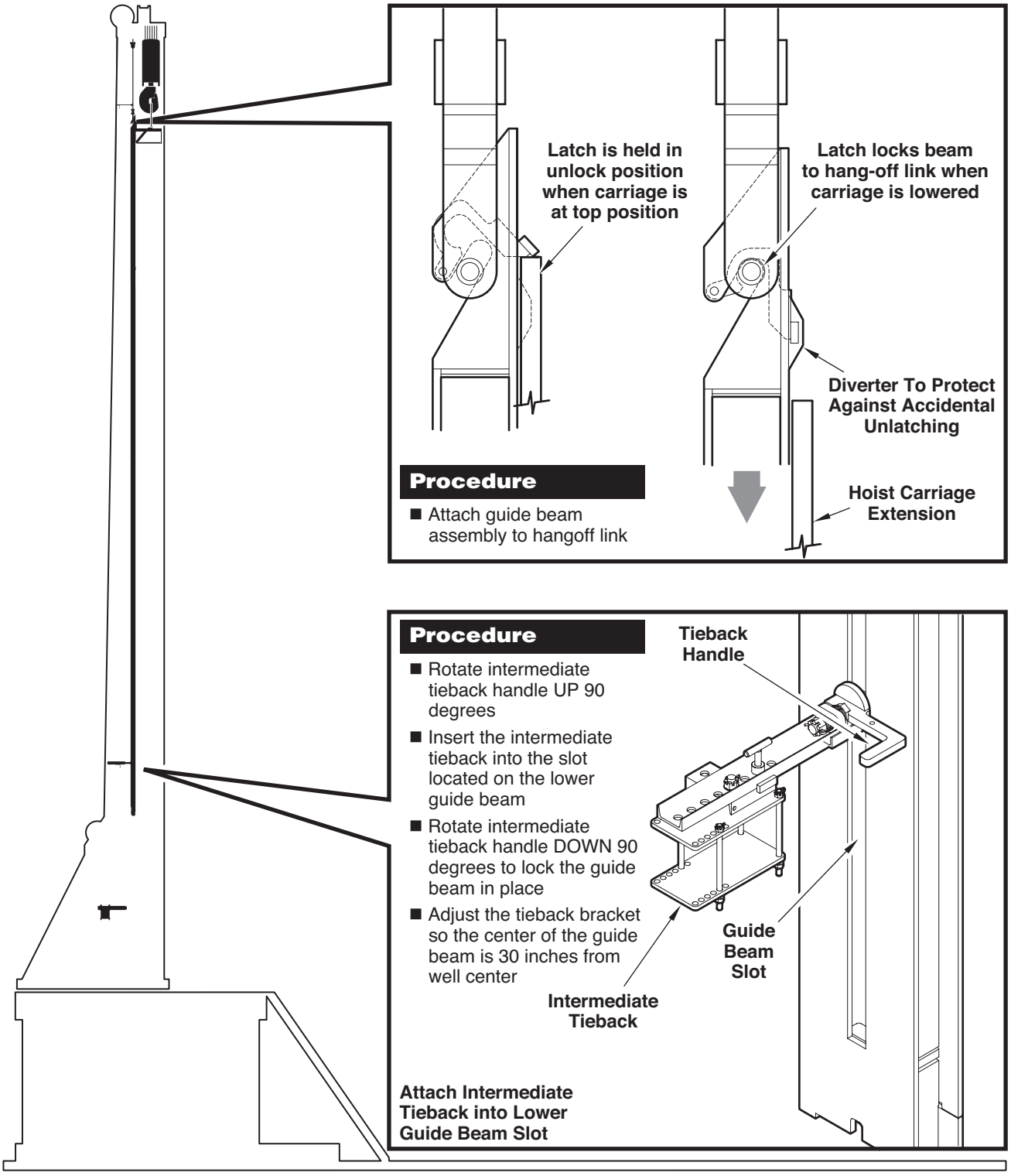

Installation

Removing the hoist carriage

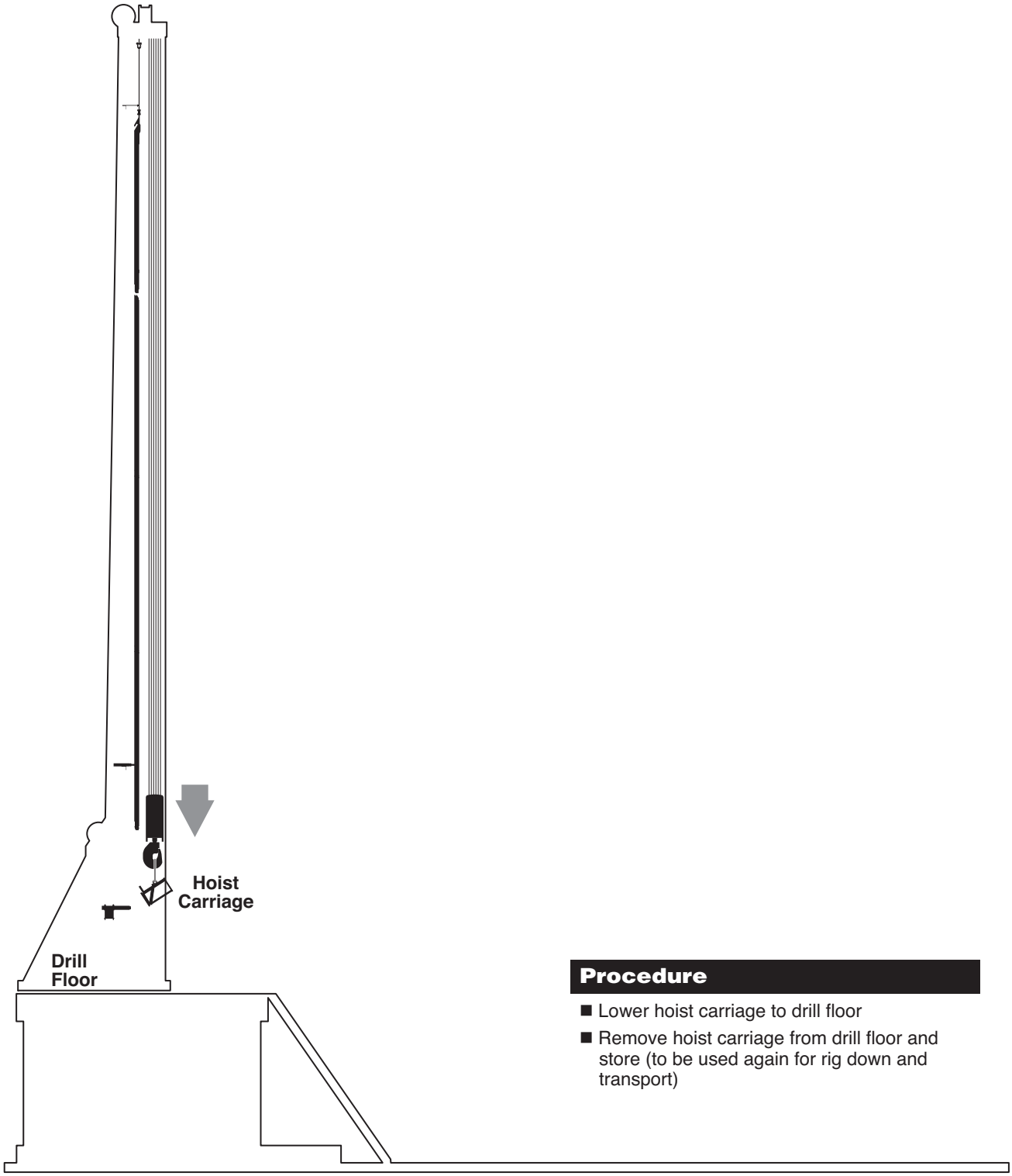

Procedure

- Lower hoist carriage to drill floor
- Remove hoist carriage from drill floor and store (to be used again for rig down and transport)

Installation

Moving the top drive to the drill floor

Procedure

Ensure the safety of all personnel

- Locate the Top Drive at the bottom of the V-Door ramp
- Attach a lifting sling to the bail
- Attach backup lines to the skid
- Hoist the Top Drive and skid to the drill floor

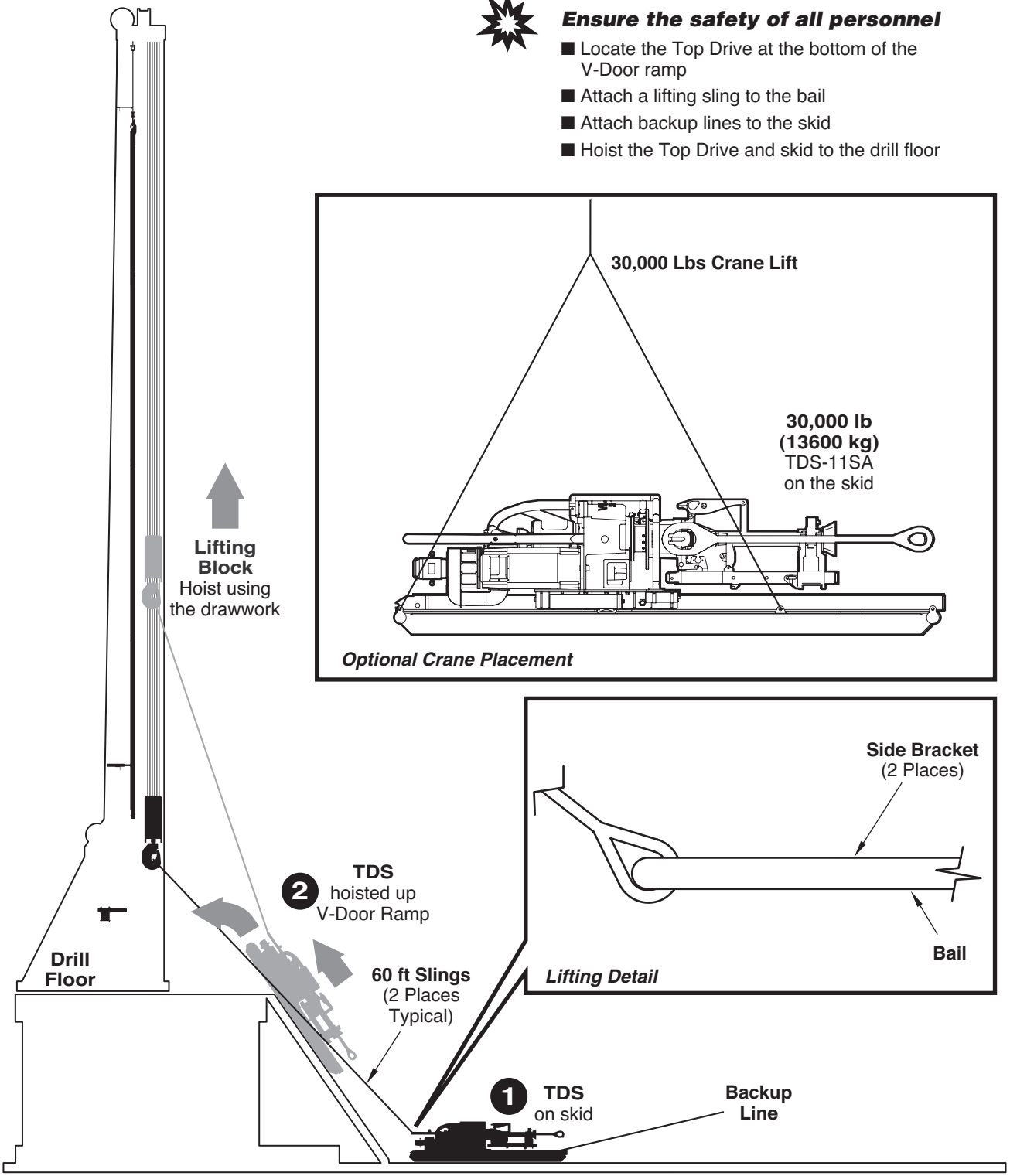

Installation

Attaching the top drive to the hook

There are two basic methods for installing the TDS-11SA top drive, depending on the travelling equipment configuration. Follow the installation procedures for option 1 or option 2 as appropriate for the rig.

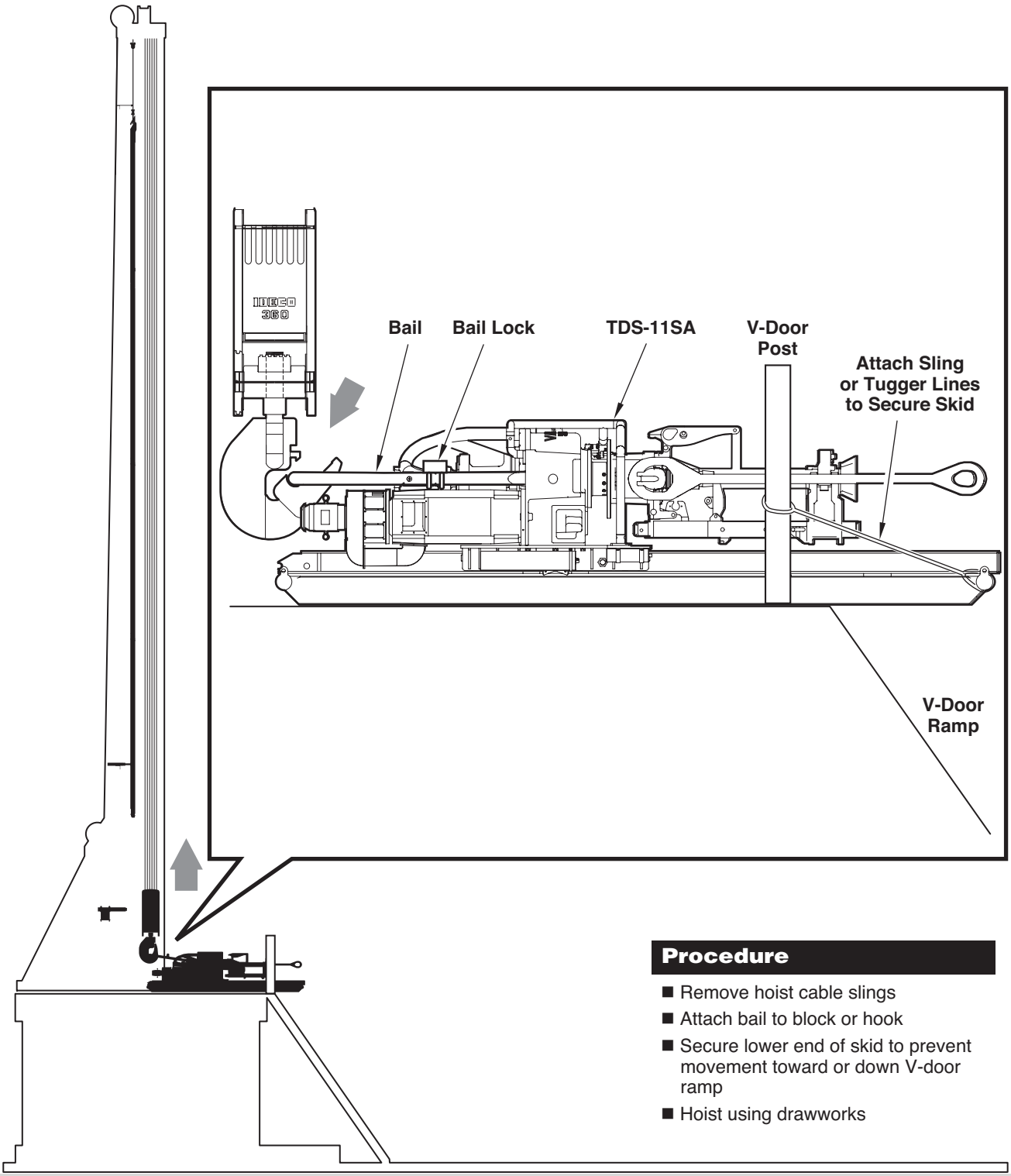

Procedure

- Remove hoist cable slings
- Attach bail to block or hook
- Secure lower end of skid to prevent movement toward or down V-door ramp
- Hoist using drawworks

Installation

Lifting the top drive to the rig floor

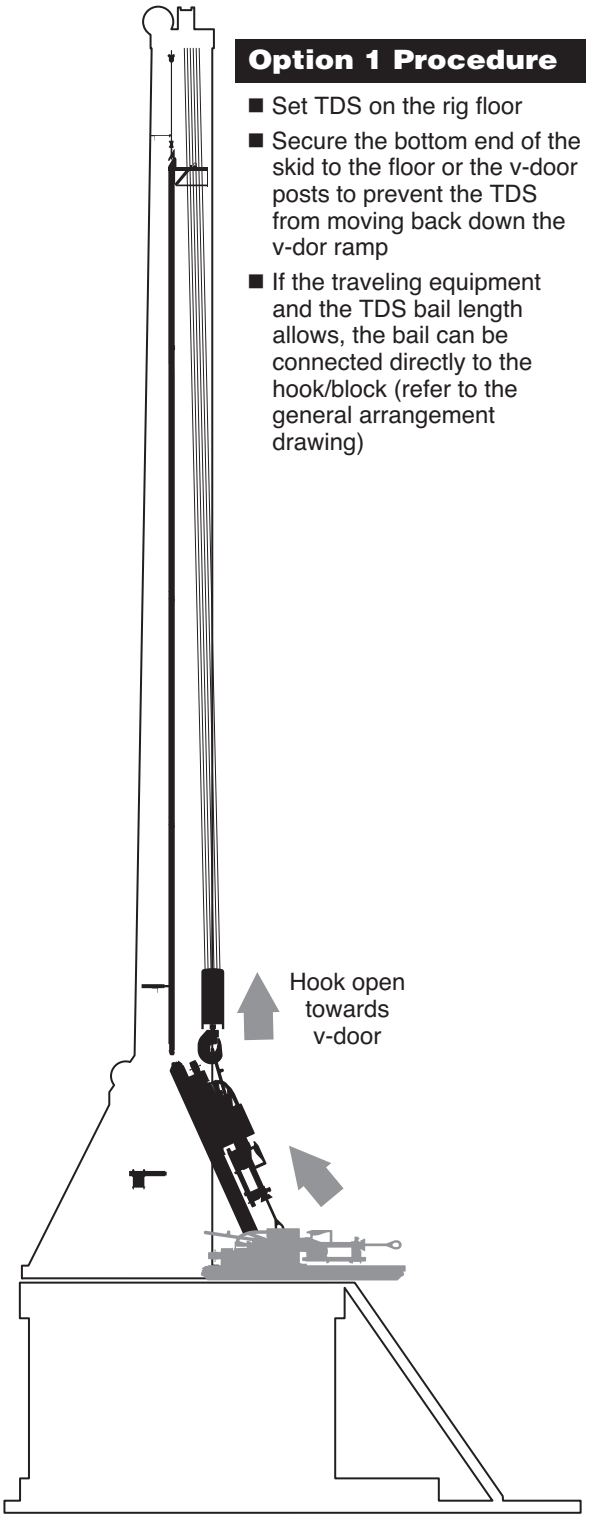

Option 1 Procedure

- Set TDS on the rig floor
- Secure the bottom end of the skid to the floor or the v-door posts to prevent the TDS from moving back down the v-dor ramp
- If the traveling equipment and the TDS bail length allows, the bail can be connected directly to the hook/block (refer to the general arrangement drawing)

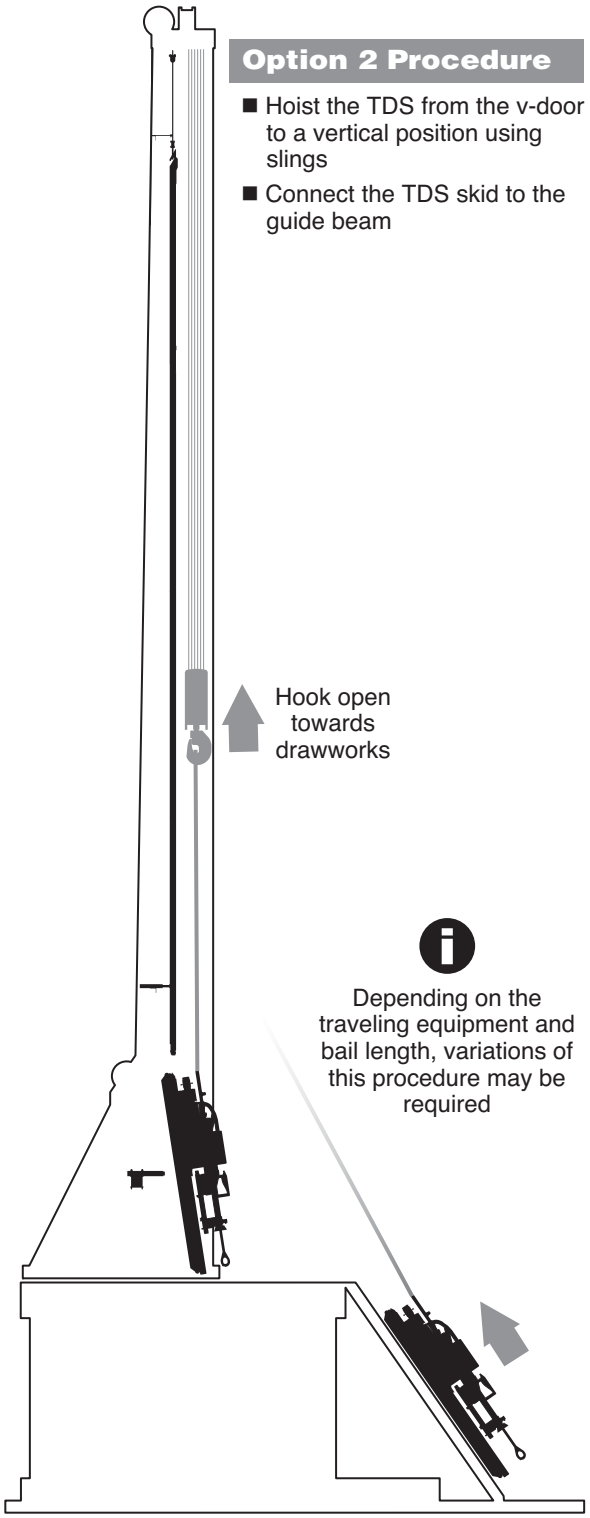

Option 2 Procedure

- Hoist the TDS from the v-door to a vertical position using slings
- Connect the TDS skid to the guide beam

Depending on the traveling equipment and bail length, variations of this procedure may be required

Installation

Hoisting and connecting the top drive to the guide beam

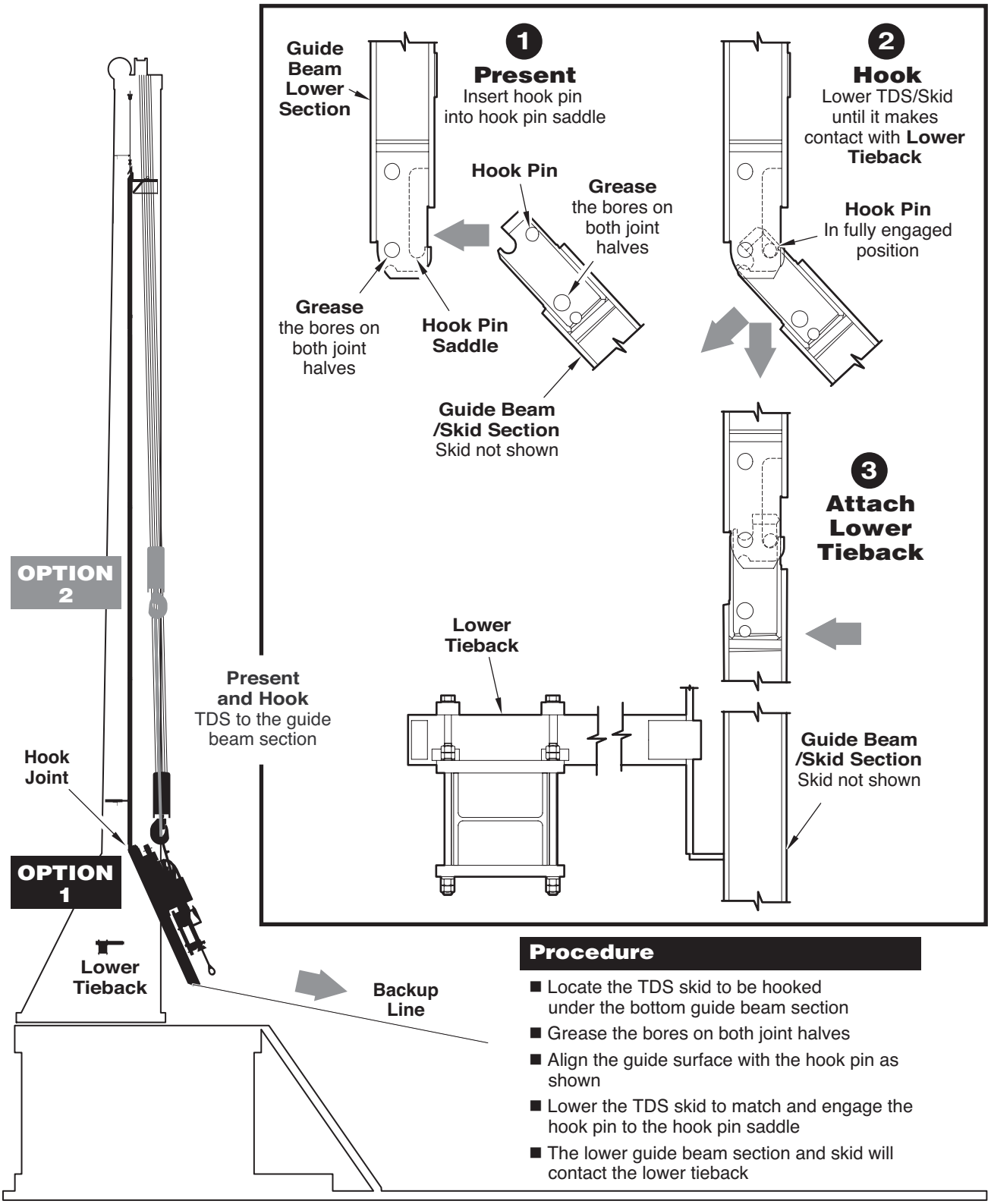

Procedure

- Locate the TDS skid to be hooked under the bottom guide beam section
- Grease the bores on both joint halves
- Align the guide surface with the hook pin as shown
- Lower the TDS skid to match and engage the hook pin to the hook pin saddle
- The lower guide beam section and skid will contact the lower tieback

Installation

Attaching the torque tieback

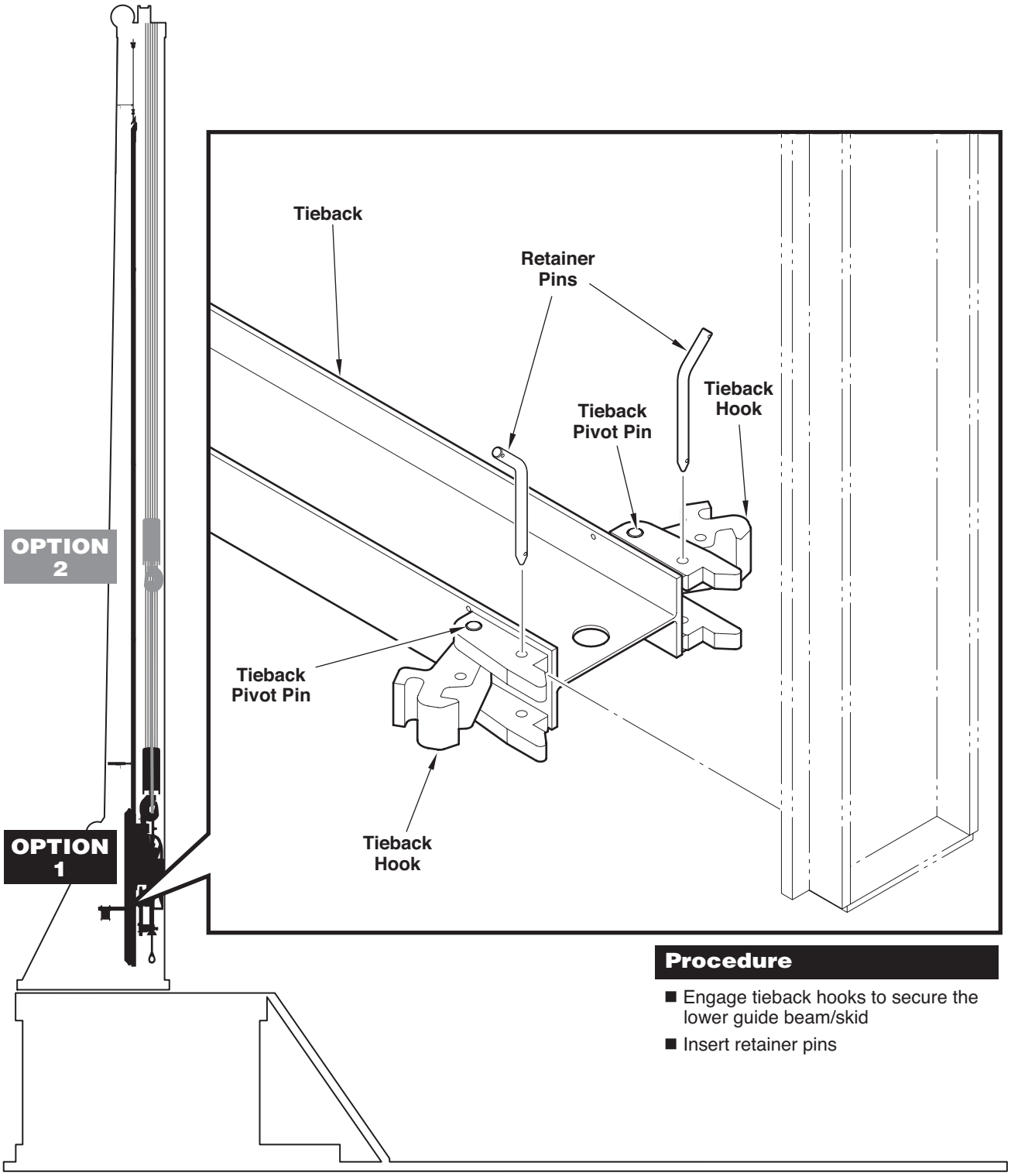

Procedure

- Engage tieback hooks to secure the lower guide beam/skid
- Insert retainer pins

Installation

Pinning the top drive to the guide beam

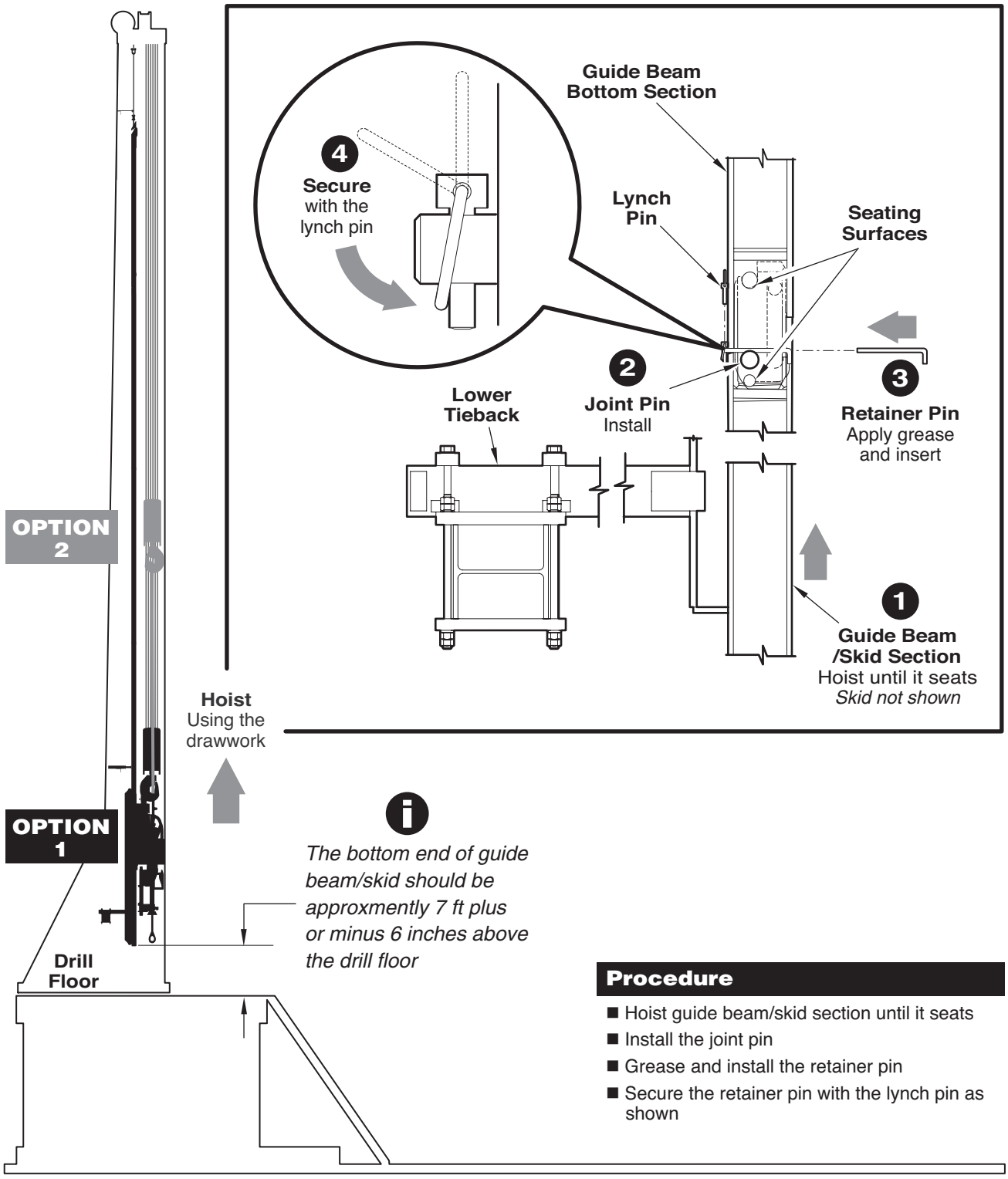

The bottom end of guide beam/skid should be approxmently 7 ft plus or minus 6 inches above the drill floor

Procedure

- Hoist guide beam/skid section until it seats
- Install the joint pin
- Grease and install the retainer pin
- Secure the retainer pin with the lynch pin as shown

Installation

Releasing the top drive from the skid

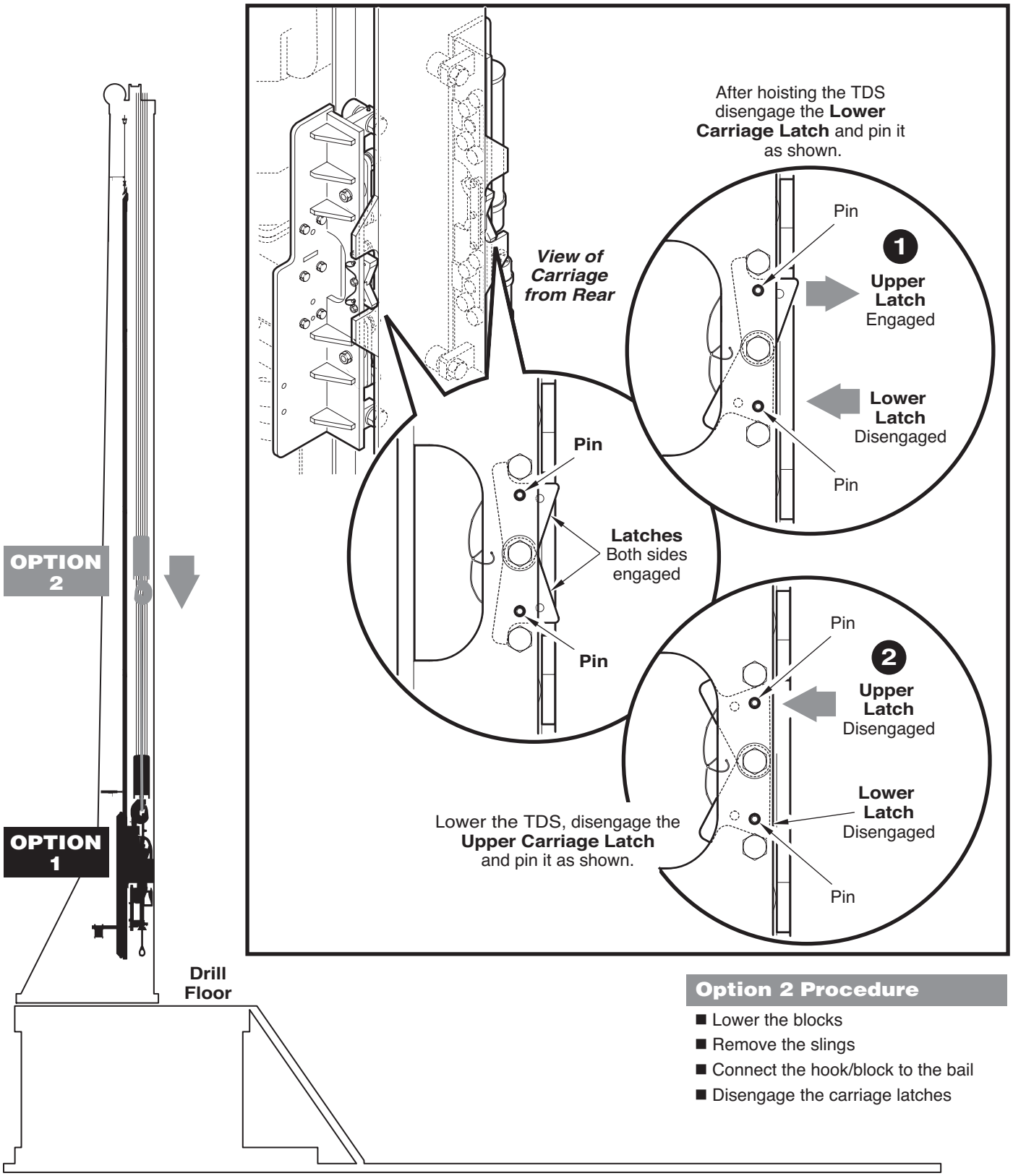

Option 2 Procedure

- Lower the blocks
- Remove the slings
- Connect the hook/block to the bail
- Disengage the carriage latches

Installation

Installing derrick termination

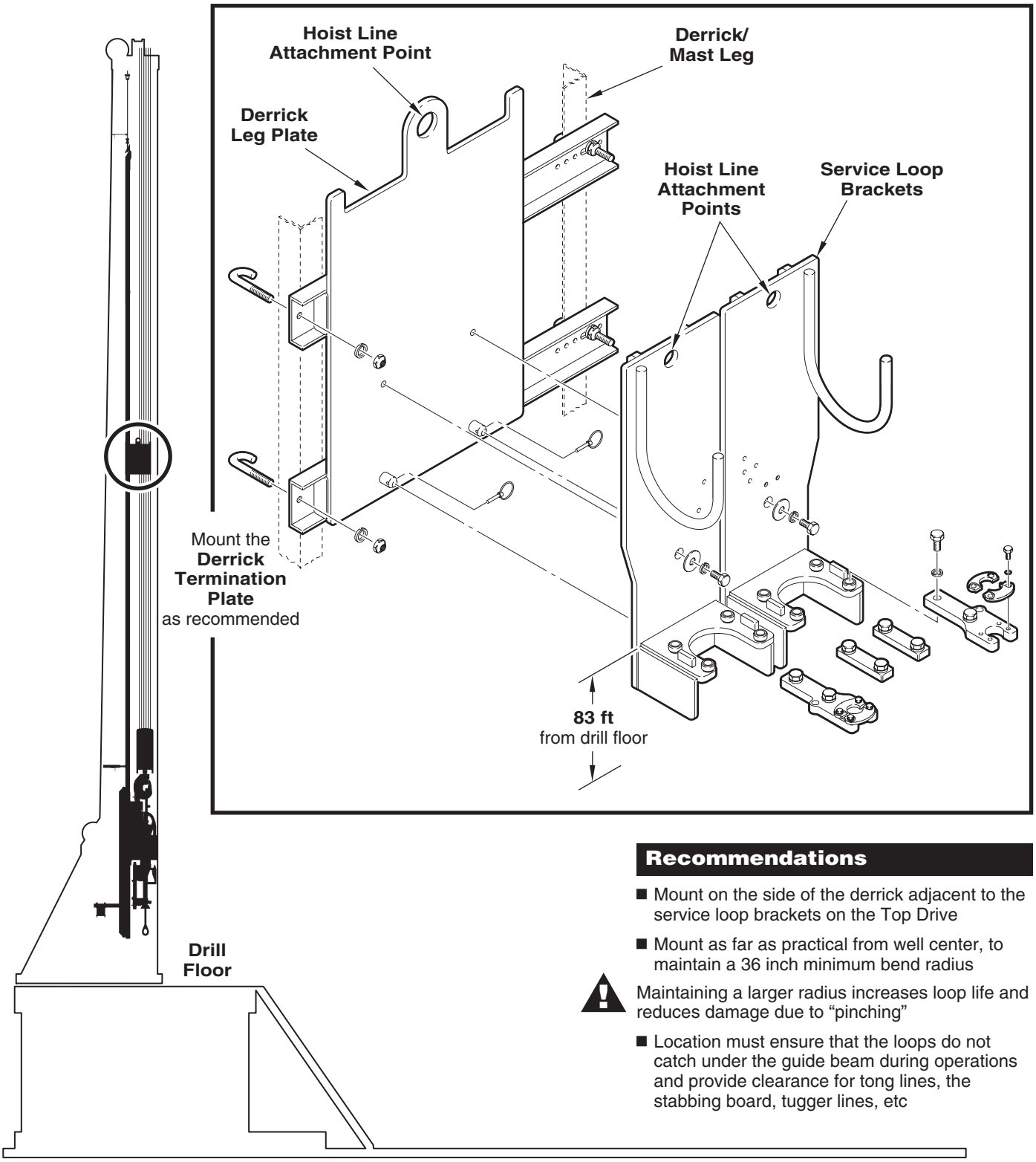

Recommendations

- Mount on the side of the derrick adjacent to the service loop brackets on the Top Drive
- Mount as far as practical from well center, to maintain a 36 inch minimum bend radius

Maintaining a larger radius increases loop life and reduces damage due to “pinching”

- Location must ensure that the loops do not catch under the guide beam during operations and provide clearance for tong lines, the stabbing board, tugger lines, etc

Installation

Installing the service loop to the derrick

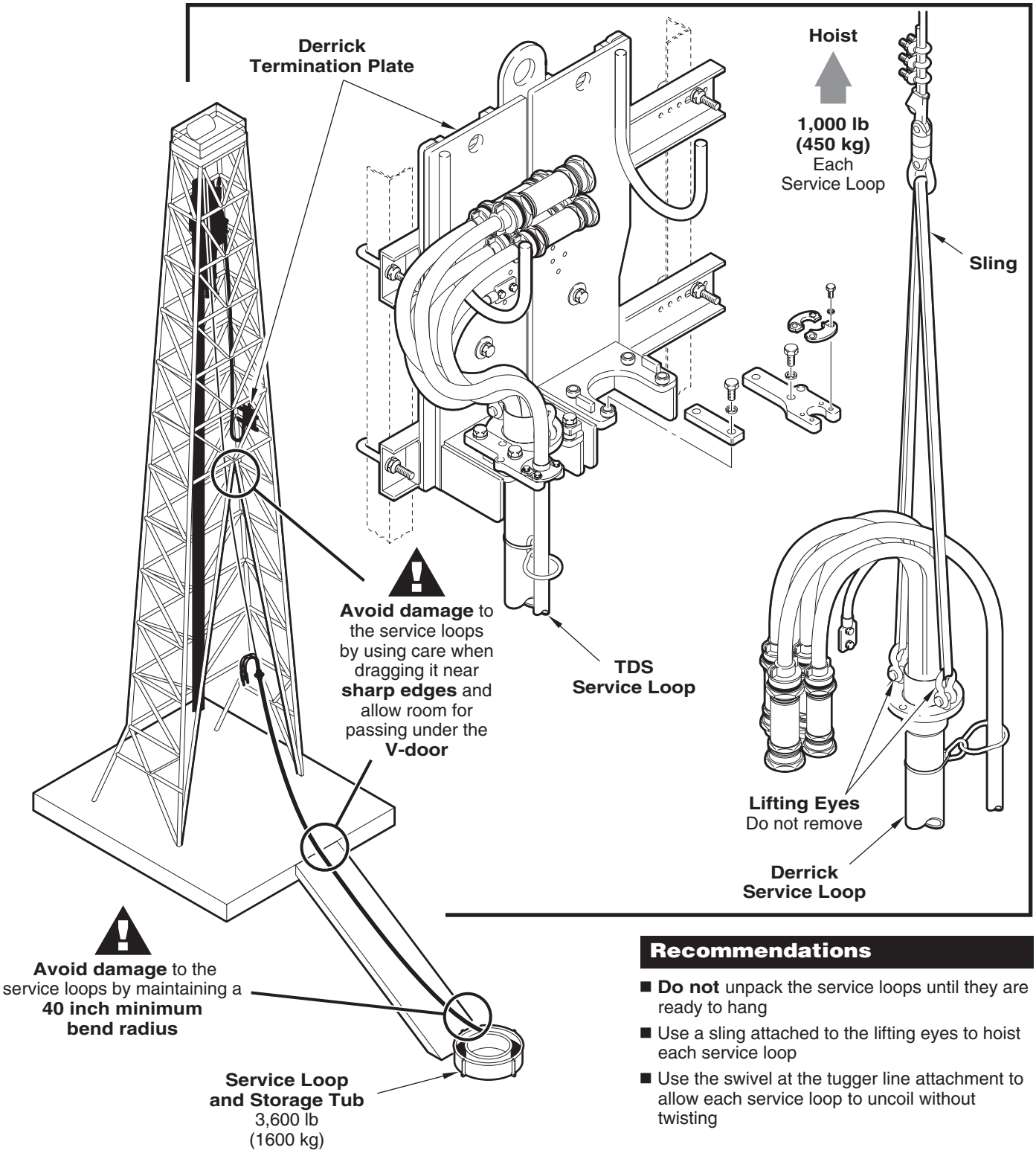

Recommendations

- **Do not** unpack the service loops until they are ready to hang
- Use a sling attached to the lifting eyes to hoist each service loop
- Use the swivel at the tugger line attachment to allow each service loop to uncoil without twisting

Installation

Installing the driller's console

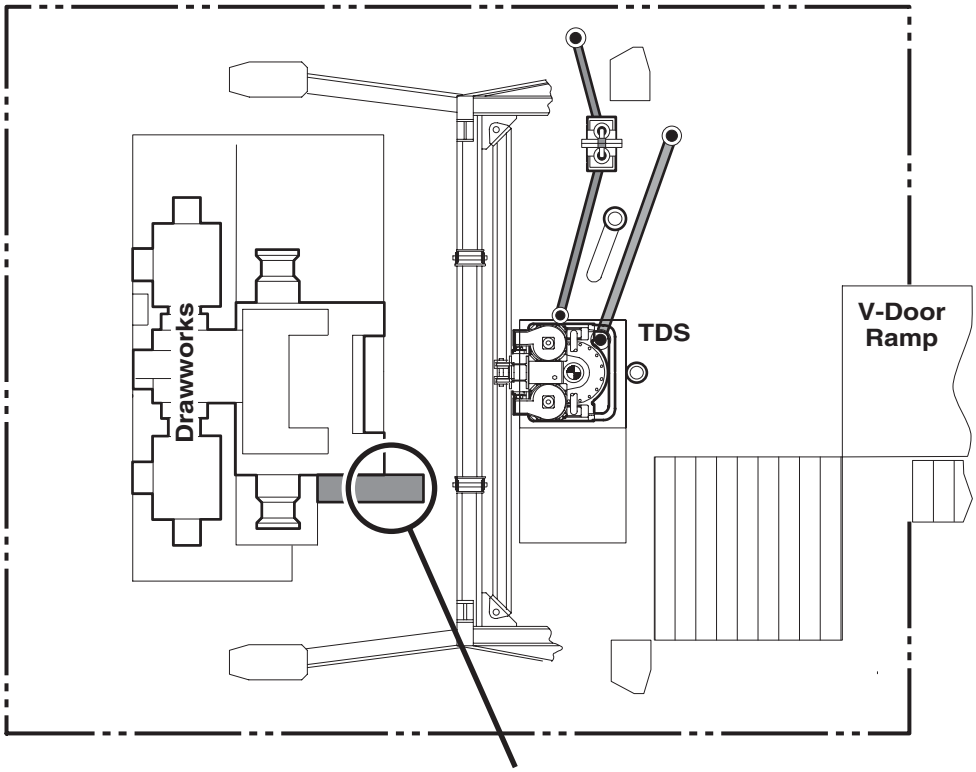

Recommended Area for Varco Driller's Console Location

Customers who choose to use control systems that are not manufactured by Varco should be aware that Varco systems are specifically designed with operational interlocks and safety devices to prevent possible injury to personnel and damage to the system. Other control systems must meet Varco requirements. Varco highly recommends the use of its system, as it is specifically made for use with the Top Drive.

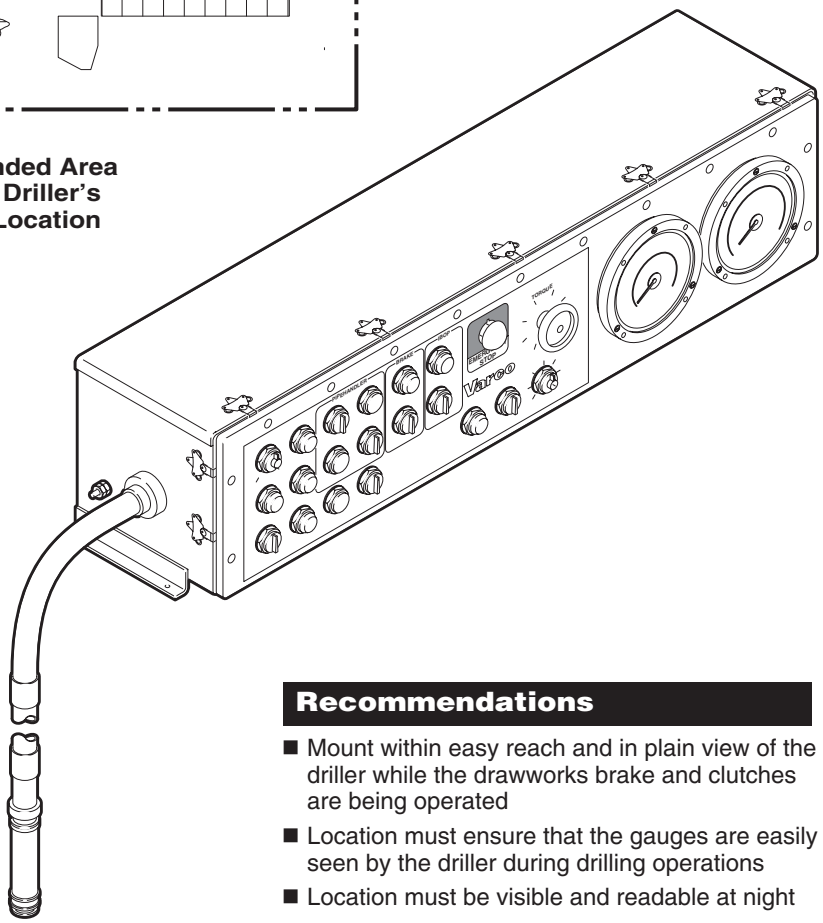

Pigtail Cable
Connect to control house

Recommendations

- Mount within easy reach and in plain view of the driller while the drawworks brake and clutches are being operated
- Location must ensure that the gauges are easily seen by the driller during drilling operations
- Location must be visible and readable at night

Installation

Installing the driller's console cabling

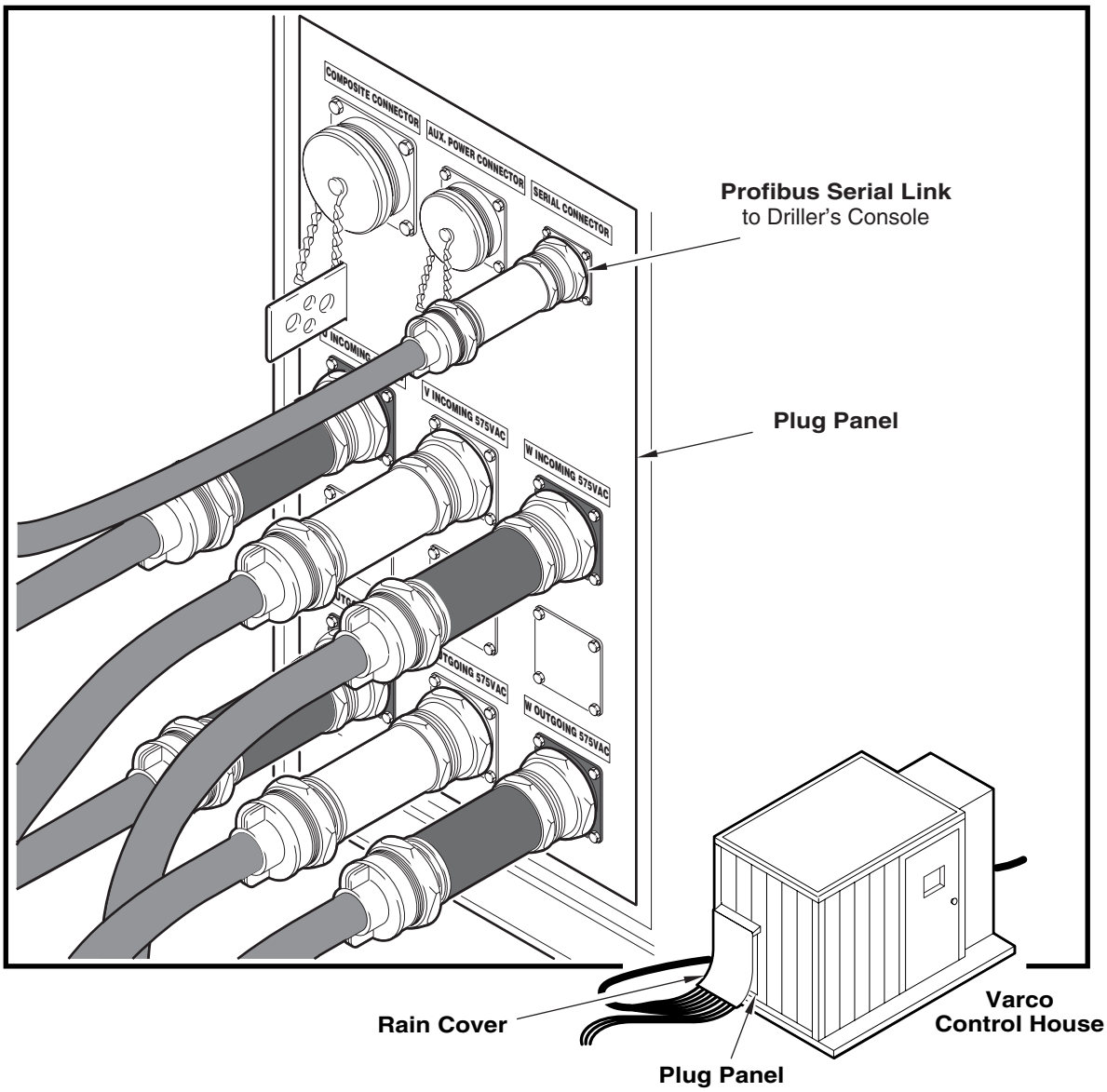

Recommendations

- Ensure that the Varco Driller's Console is properly located
- Connect the power cables with the isolation circuit breaker turned ***OFF***
- Connect cables in accordance with the electrical schematic provided in the *Technical Drawings* book
- Tighten connector nuts
- Lockwire connector nuts to prevent loosening

Installation

Motor rotation checkout procedure

Procedure

- Assign the Top Drive and inverter by selecting FORWARD or REVERSE on the driller's console
- Check the rotation direction of the cooling and oil pump motors
- Rotate the drill stem using the THROTTLE on the driller's console and observe proper operation

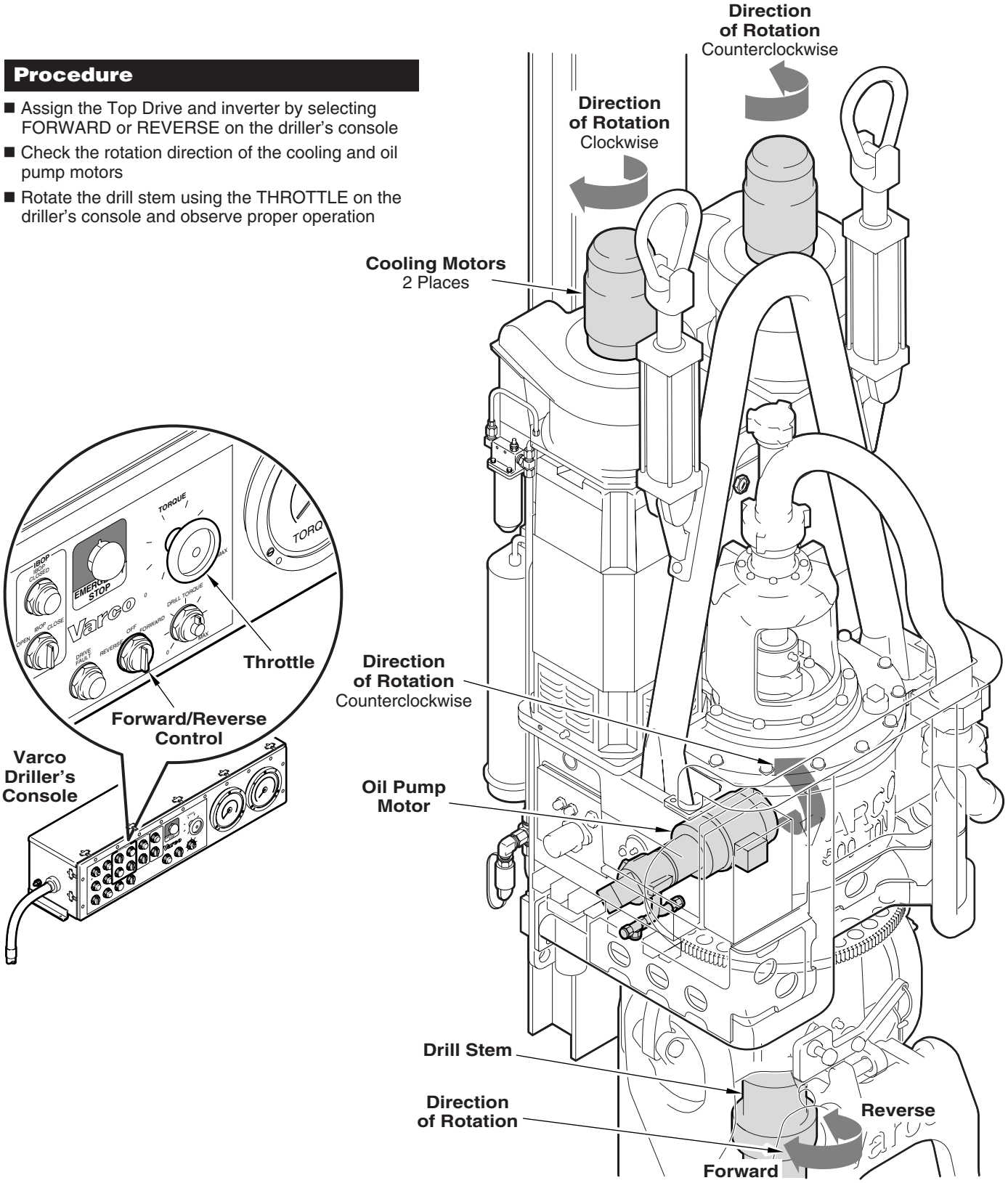

Installation

Installing the pipe elevator and links

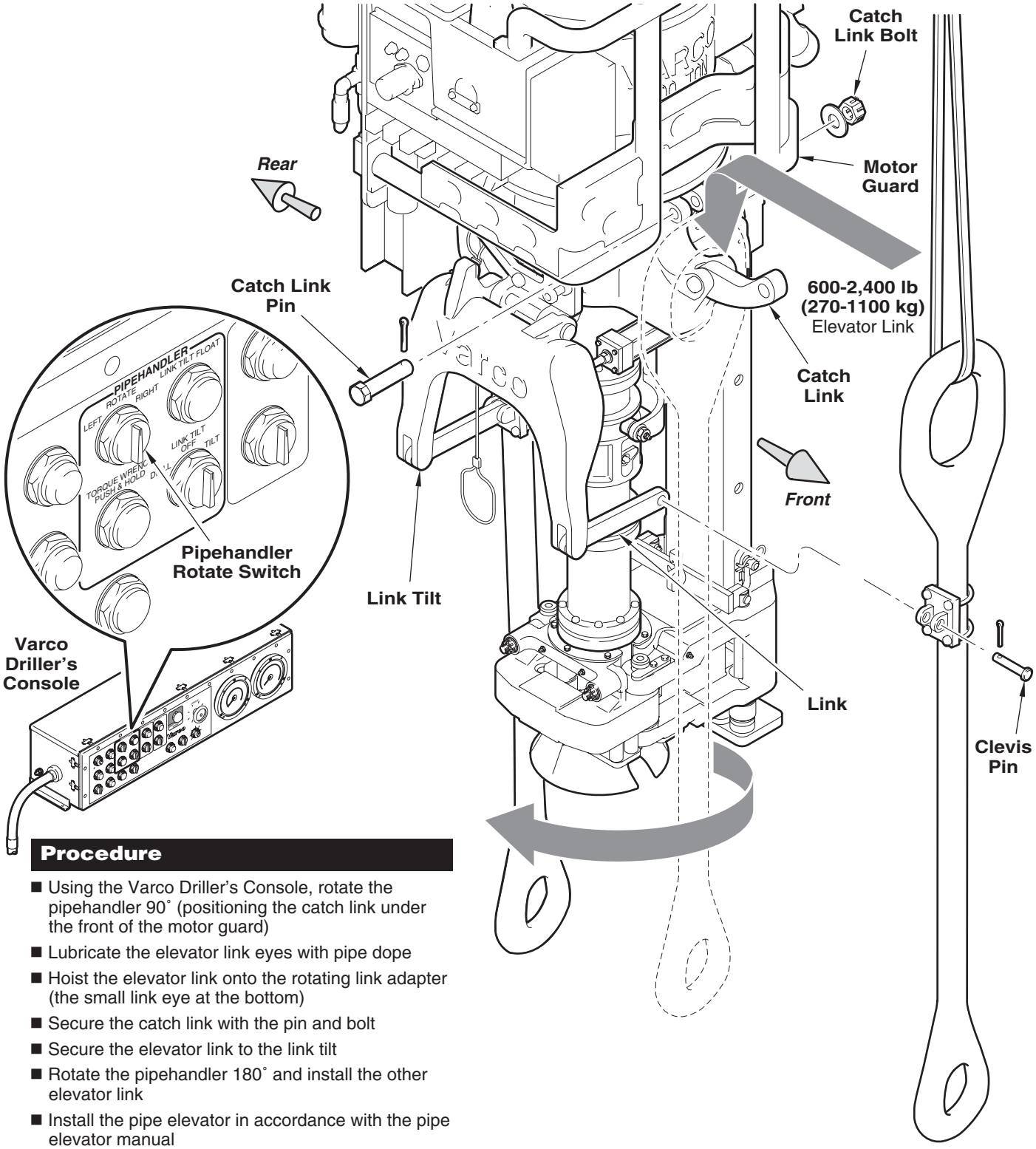

Procedure

- Using the Varco Driller's Console, rotate the pipehandler 90˚ (positioning the catch link under the front of the motor guard)
- Lubricate the elevator link eyes with pipe dope
- Hoist the elevator link onto the rotating link adapter (the small link eye at the bottom)
- Secure the catch link with the pin and bolt
- Secure the elevator link to the link tilt
- Rotate the pipehandler 180˚ and install the other elevator link
- Install the pipe elevator in accordance with the pipe elevator manual

Installation

Installing the counterbalance

Procedure

- Refer to *Setting up the circuits* in the Hydraulic section of this manual for initial system set up
- Install the pear links to the ears on the hook
- Turn on the Top Drive power
- Rotate the counterbalance mode valve from the RUN position to the RIG-UP position
- When the cylinders reach the end of stroke, slide the cylinder clevis over the pear link and install the cylinder clevis pin
- After securing the counterbalance cylinder to the pear link, rotate the counterbalance mode valve to the RUN position
- Adjust PCC clockwise to raise the pressure at test port CB until the bail just begins to lift off of the block
- Reduce the pressure slowly (25 psi) to allow pressure to stabilize

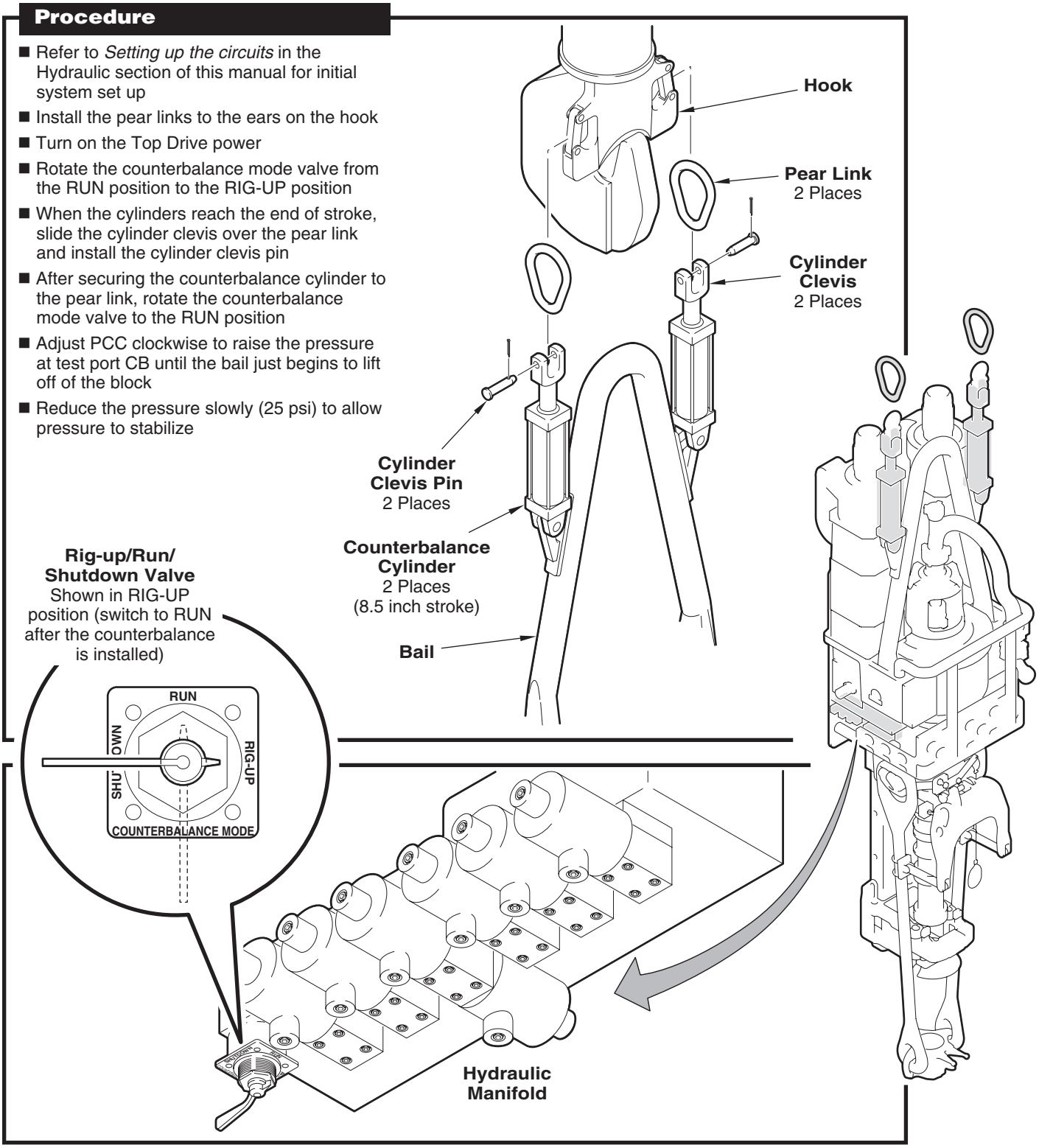

Commissioning

Checkout procedure

Initial Rig-Up

- Pre-charge all accumulators (See the *Hydraulics System* section of this manual)
- Adjust the hydraulic system
- Bleed the air from the hydraulic system
- Constantly monitor the hydraulic fluid level, and never allow the level to fall below the middle of the sight glass (system power OFF)

Checkout Procedure

- Lubricate all grease points (See *Lubrication*)
- Check for loose or missing connectors
- Lockwire all connector nuts
- Check for interference along entire mast
- Remove exhaust covers from AC drilling motors
- Check blower inlets and outlets for blockage
- Set the air conditioner to 75˚F (27˚C)
- Turn on the main breaker

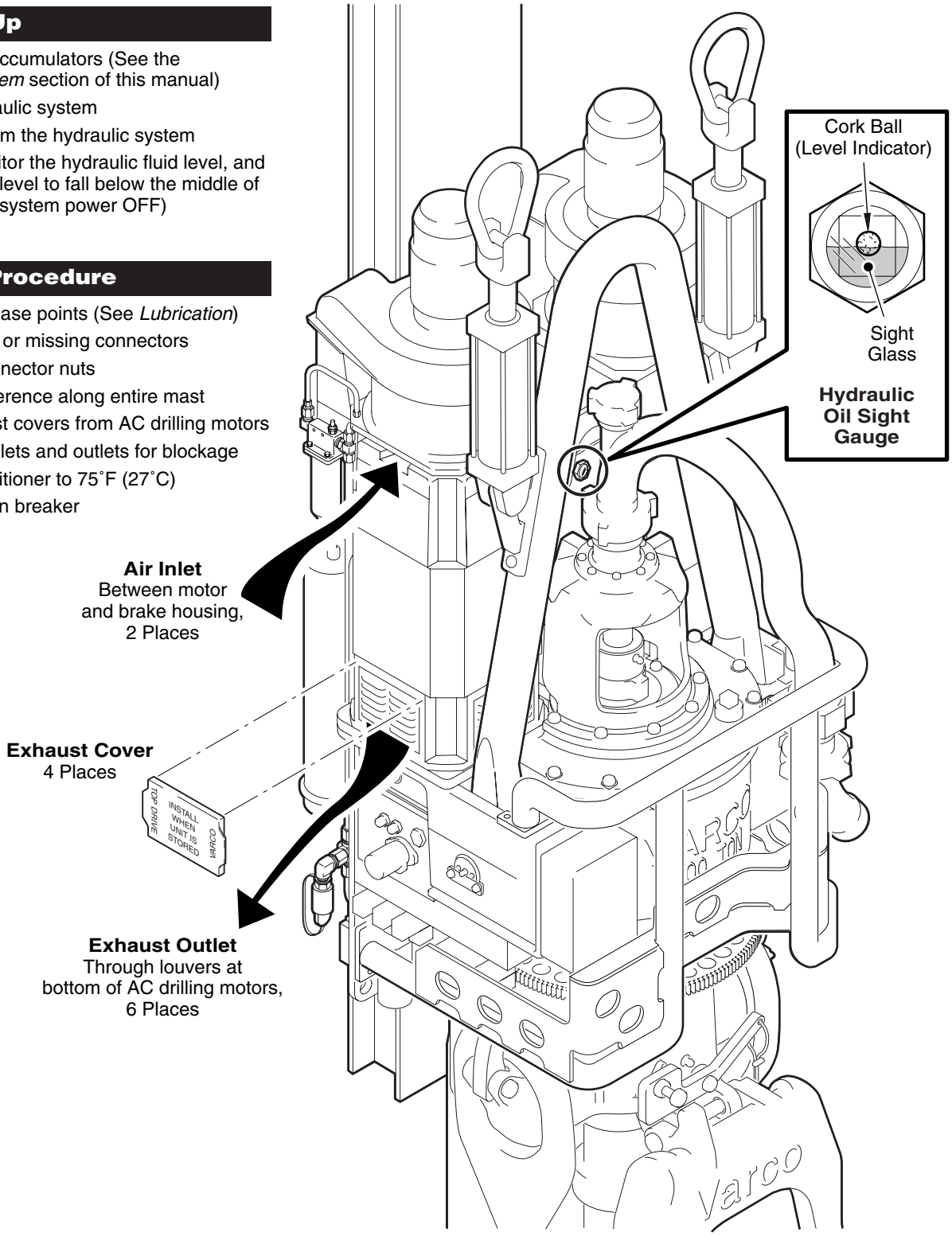

Commissioning

Hydraulic system checkout procedure

Checking hydraulic fluid level

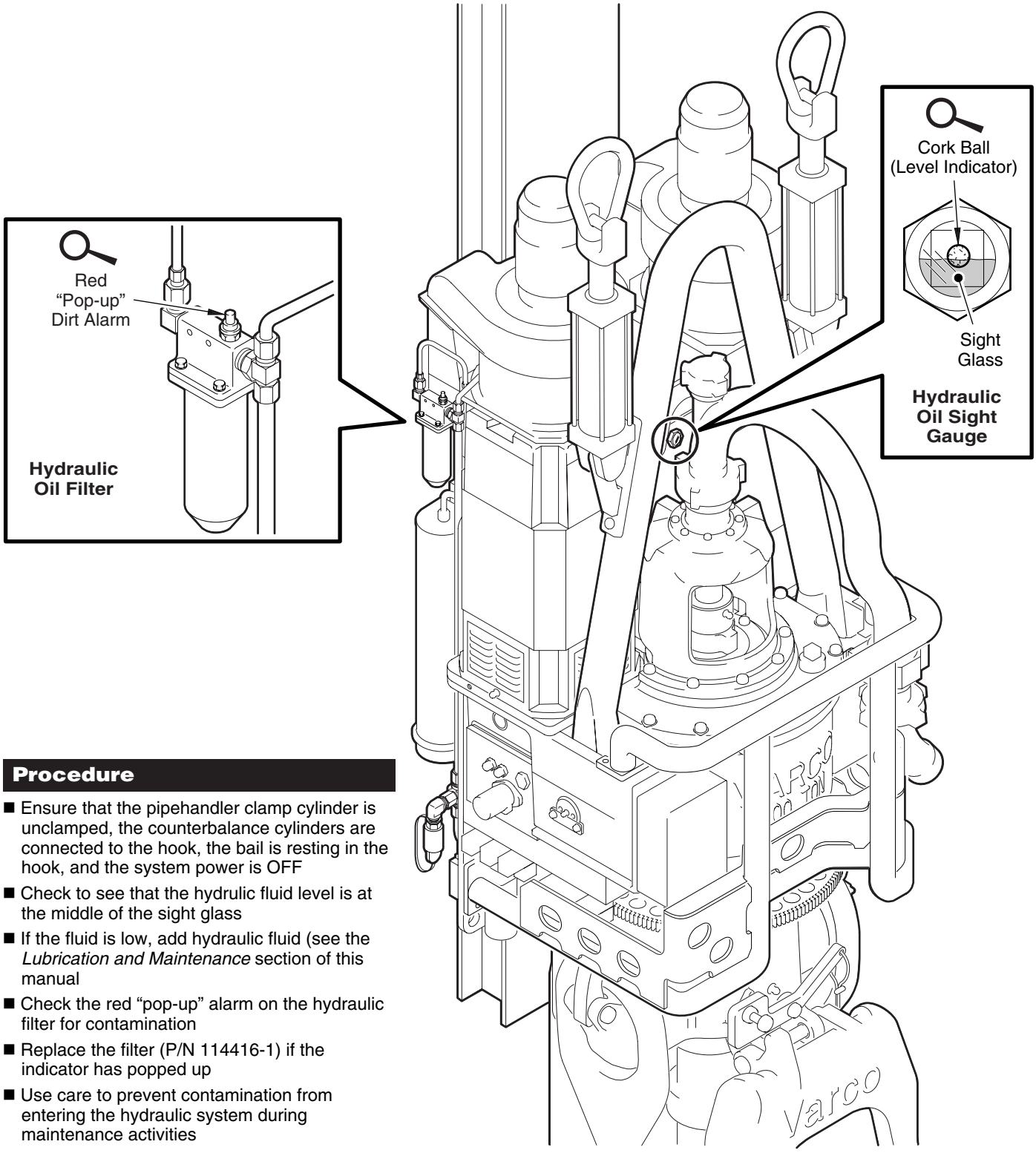

Procedure

- Ensure that the pipehandler clamp cylinder is unclamped, the counterbalance cylinders are connected to the hook, the bail is resting in the hook, and the system power is OFF
- Check to see that the hydrulic fluid level is at the middle of the sight glass
- If the fluid is low, add hydraulic fluid (see the *Lubrication and Maintenance* section of this manual
- Check the red "pop-up" alarm on the hydraulic filter for contamination
- Replace the filter (P/N 114416-1) if the indicator has popped up
- Use care to prevent contamination from entering the hydraulic system during maintenance activities

Commissioning

Electrical system checkout procedure

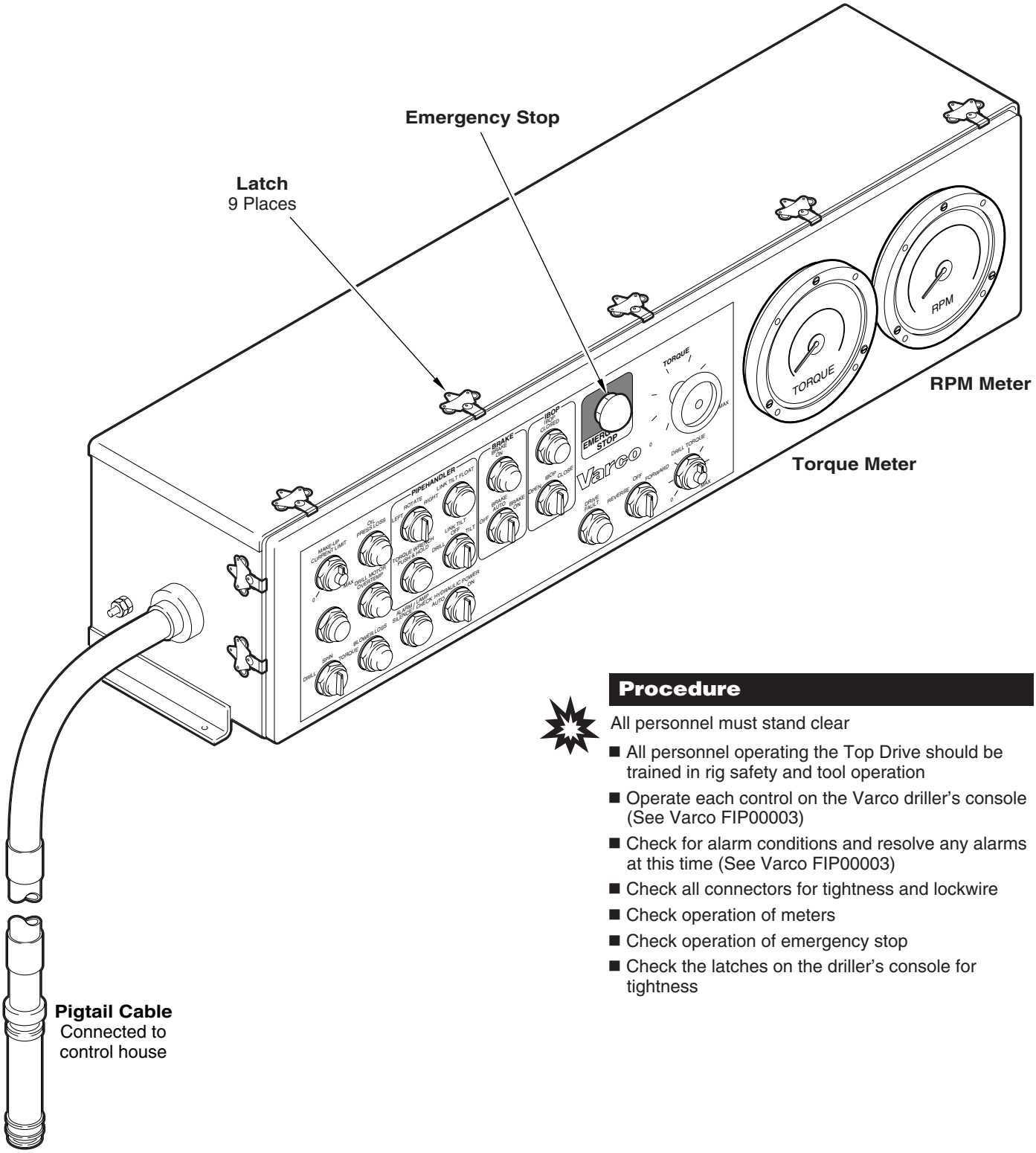

Procedure

All personnel must stand clear

- All personnel operating the Top Drive should be trained in rig safety and tool operation
- Operate each control on the Varco driller's console (See Varco FIP00003)
- Check for alarm conditions and resolve any alarms at this time (See Varco FIP00003)
- Check all connectors for tightness and lockwire
- Check operation of meters
- Check operation of emergency stop
- Check the latches on the driller's console for tightness

Commissioning

Mechanical checkout procedure

Checking gearbox oil level

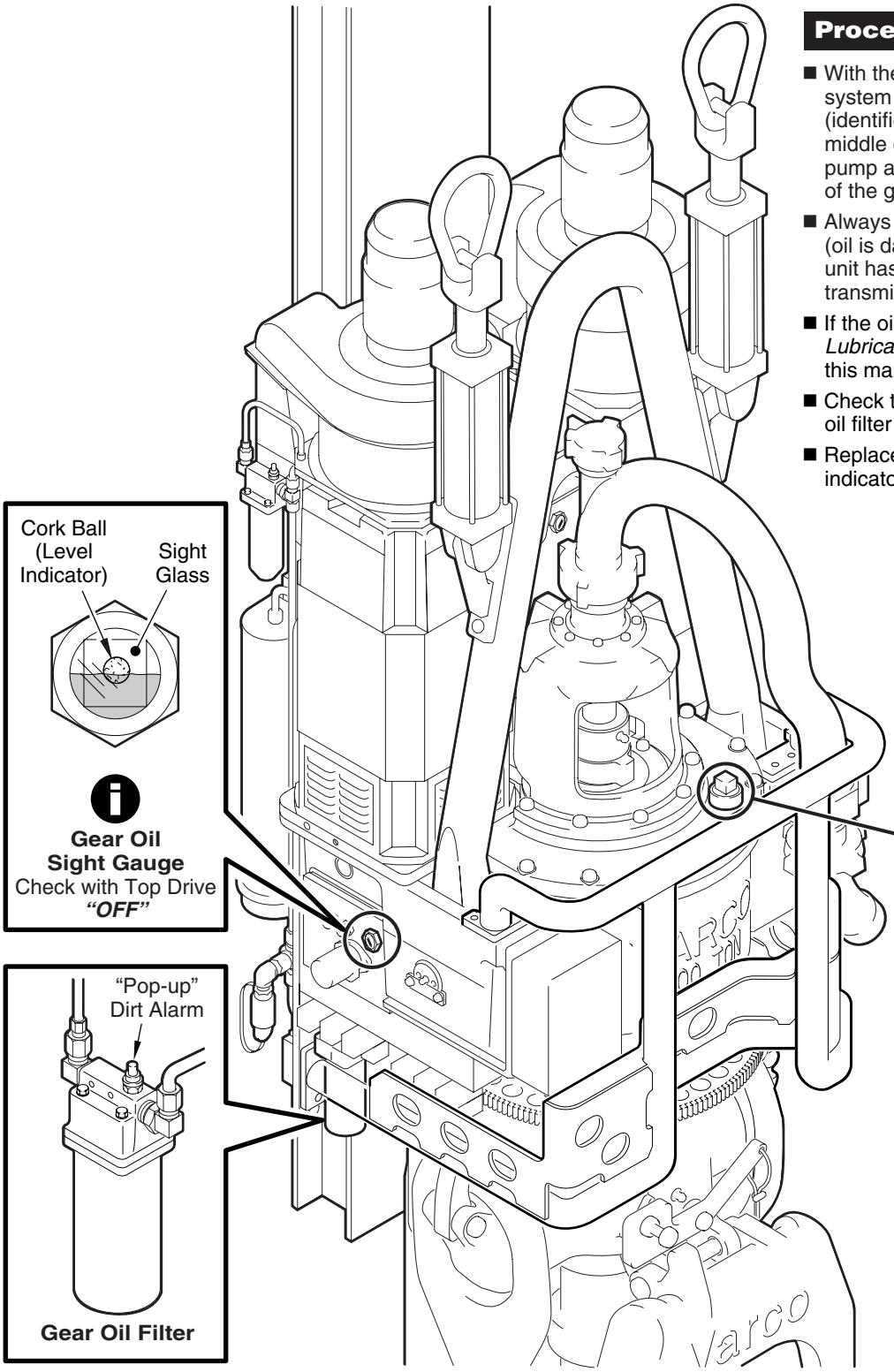

Procedure

- With the drive motors and hydraulic system off, check to see that the oil level (identified by a floating cork ball) is at the middle of the glass located on the lube pump adapter plate mounted on the side of the gearbox
- Always check the oil level, not foam level (oil is dark brown, foam is tan) after the unit has been running and the transmission oil is warm
- If the oil level is low, add gear oil (see the *Lubrication and Maintenance* section of this manual
- Check the red "pop-up" alarm on the gear oil filter for contamination
- Replace the filter (P/N 111013-1) if the indicator has popped up

Commissioning

Adjusting the link tilt

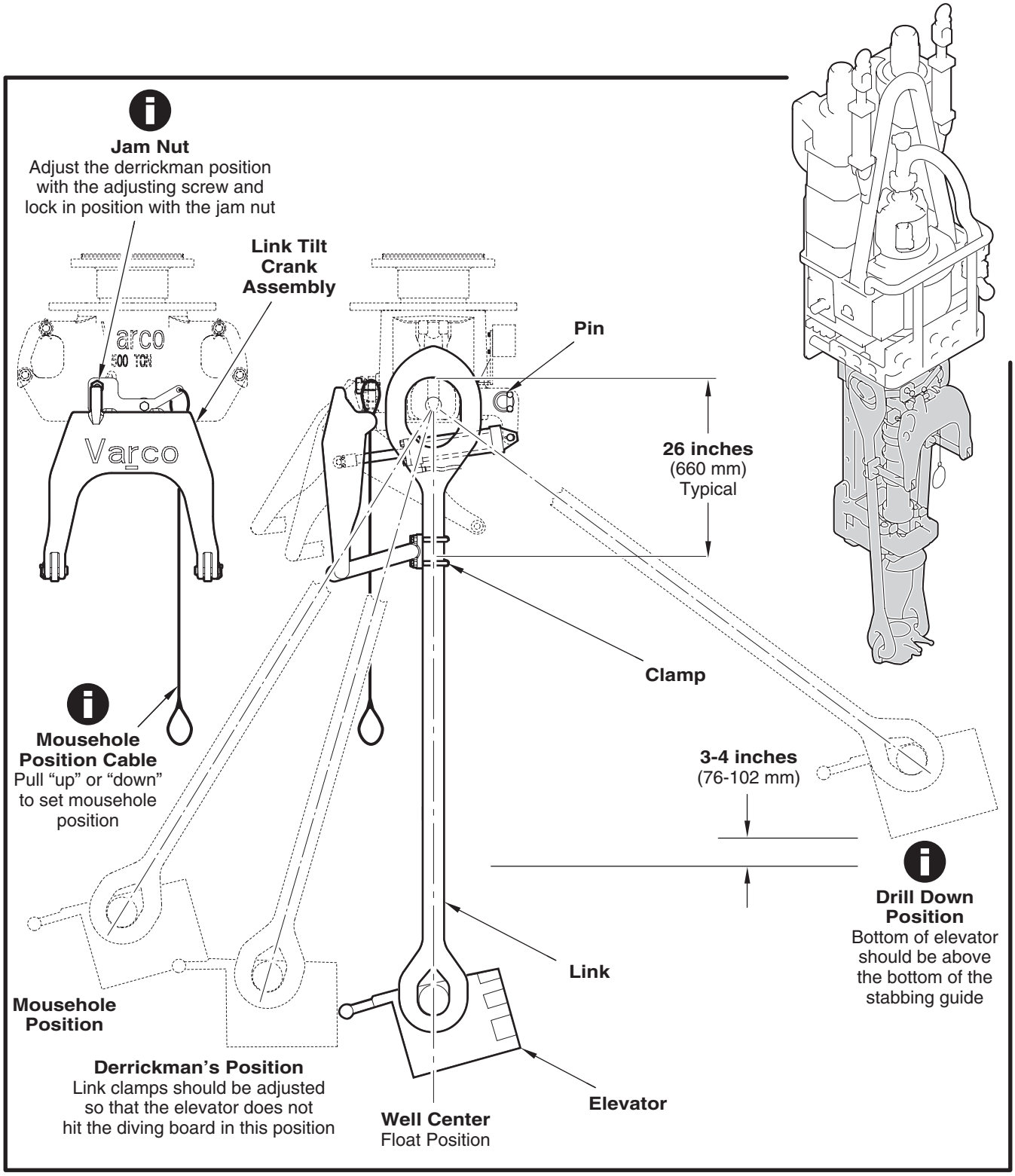

Commissioning

Breaking out the saver sub

During normal operation, the torque backup clamp cylinder is sitting on the springs, which are supported by the bottom plate of the torque arrestor.

1. Loosen the tool joint lock between the saver sub and the lower IBOP valve by unscrewing the ten bolts. Refer to the tool joint lock assembly and disassembly procedures in the *Maintenance* section. Slide the tool joint lock down until it rests on the clamp cylinder body.
2. Raise the clamp cylinder until the clamp cylinder positioning slot lines up with the first hole on the torque arrestor. Insert the safety pin through the clamp cylinder and torque arrestor.
3. Select TORQUE mode. Pressurize the clamp cylinder to clamp on the saver sub by pressing and holding the TORQUE WRENCH PRESS AND HOLD button.
4. Switch the drilling motor to REVERSE to break out the connection.
5. Once the connection is broken out, switch to SPIN and allow the motor to spin until the saver sub and lower IBOP valve separate. Remove the safety pin. Lower the clamp cylinder with the saver sub. The saver sub is ready for removal.
6. Unclamp the saver sub by releasing the TORQUE WRENCH PRESS AND HOLD button.

Stand clear. The saver sub must be supported before unclamping it. It will fall through the bottom of the stabbing guide if not supported.

Commissioning

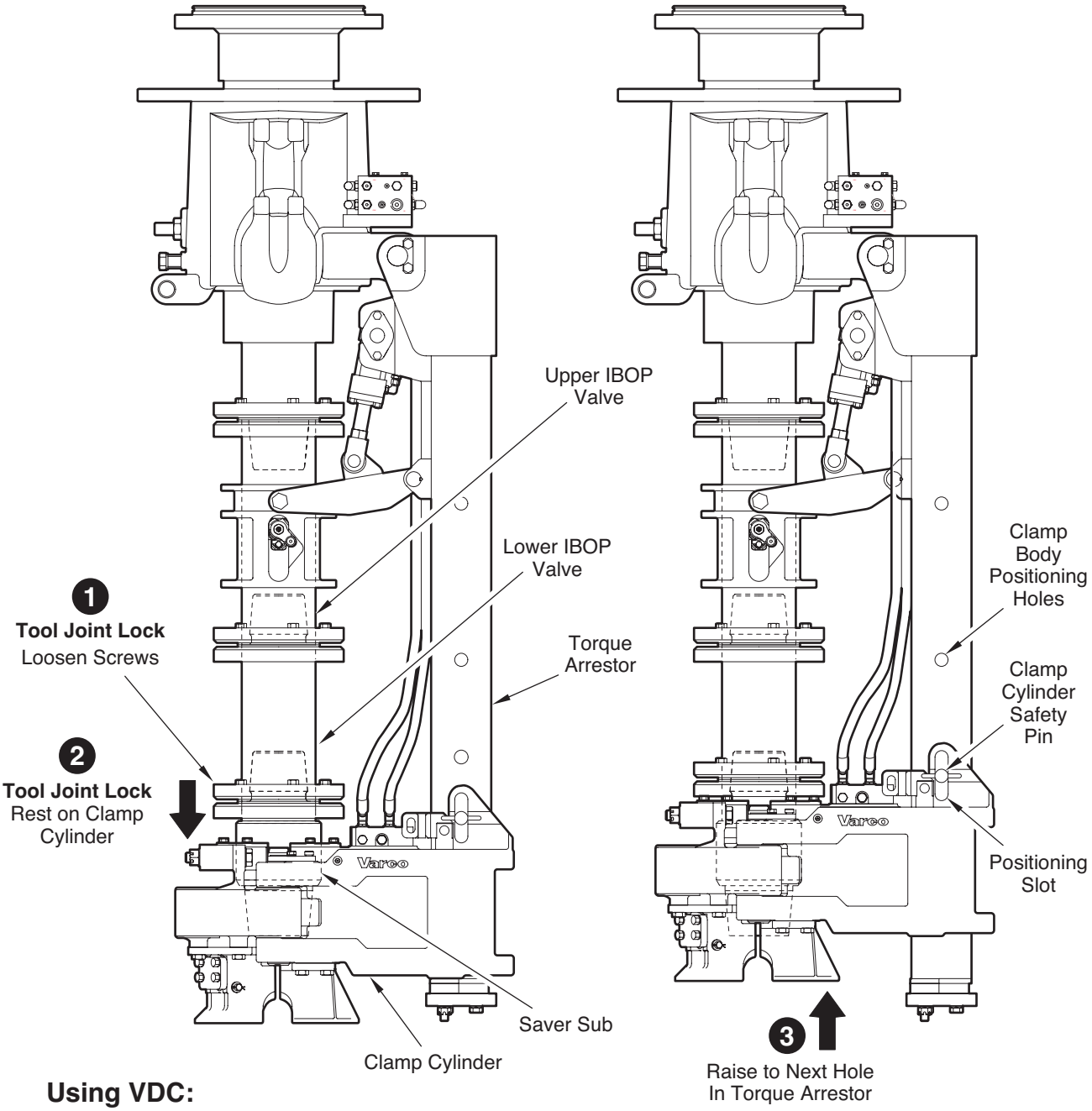

Using VDC:

4. Select **TORQUE** mode.
5. **TORQUE WRENCH** PUSH & HOLD.
6. Drilling Motor **REVERSE.**
7. Drilling Motor **SPIN.**
8. Support Saver Sub and release from Torque Back-up Clamp Cylinder.

Commissioning

Making up the saver sub

1. Manually screw in the replacement saver sub into the lower IBOP valve.

   To manually screw in the replacement saver sub to the lower IBOP valve, raise the clamp cylinder until the lower IBOP valve is exposed below the stabbing guide (a pup joint may be used). Lower the clamp cylinder using the winch until the hole and slot line up. Insert the pin.

2. Select TORQUE mode. Pressurize the clamp cylinder to clamp on the saver sub by pressing and holding the TORQUE WRENCH PRESS AND HOLD button.

3. Switch the drilling motor to FORWARD. Select SPIN mode and rotate the drilling motor until the saver sub shoulders against the lower IBOP valve. Select TORQUE mode and apply the desired torque.

4. Release the TORQUE WRENCH PRESS AND HOLD button to unclamp. Lower the clamp cylinder all the way down.

5. Position the tool joint lock correctly and follow the proper assembly procedure described in the *Tool joint locks* section.

Commissioning

Breaking out the lower IBOP

Remove the saver sub first as described in the previous section.

1. Loosen the tool joint lock between the lower IBOP valve and the upper IBOP valve by unscrewing the bolts. Slide it down and rest it on the tool joint lock sitting on the clamp cylinder.
2. Raise the clamp cylinder with the two tool joint locks until the clamp cylinder slot lines up with the second hole on the torque arrestor. Insert the pin.
3. Select TORQUE mode. Pressurize the torque backup clamp cylinder to clamp on the lower IBOP valve by pressing and holding the TORQUE WRENCH PRESS AND HOLD button.
4. Once the connection is broken out, switch to SPIN and allow the motor to spin until the upper IBOP valve and the lower IBOP valve separate.
5. Remove the safety pin. Lower the clamp cylinder with the lower IBOP. The lower IBOP is ready for removal.
6. Unclamp the lower IBOP valve by releasing the TORQUE WRENCH PRESS AND HOLD button.

Stand clear. The lower IBOP valve and saver sub must be supported before unclamping them. They will fall through the bottom of the stabbing guide if not supported.

Commissioning

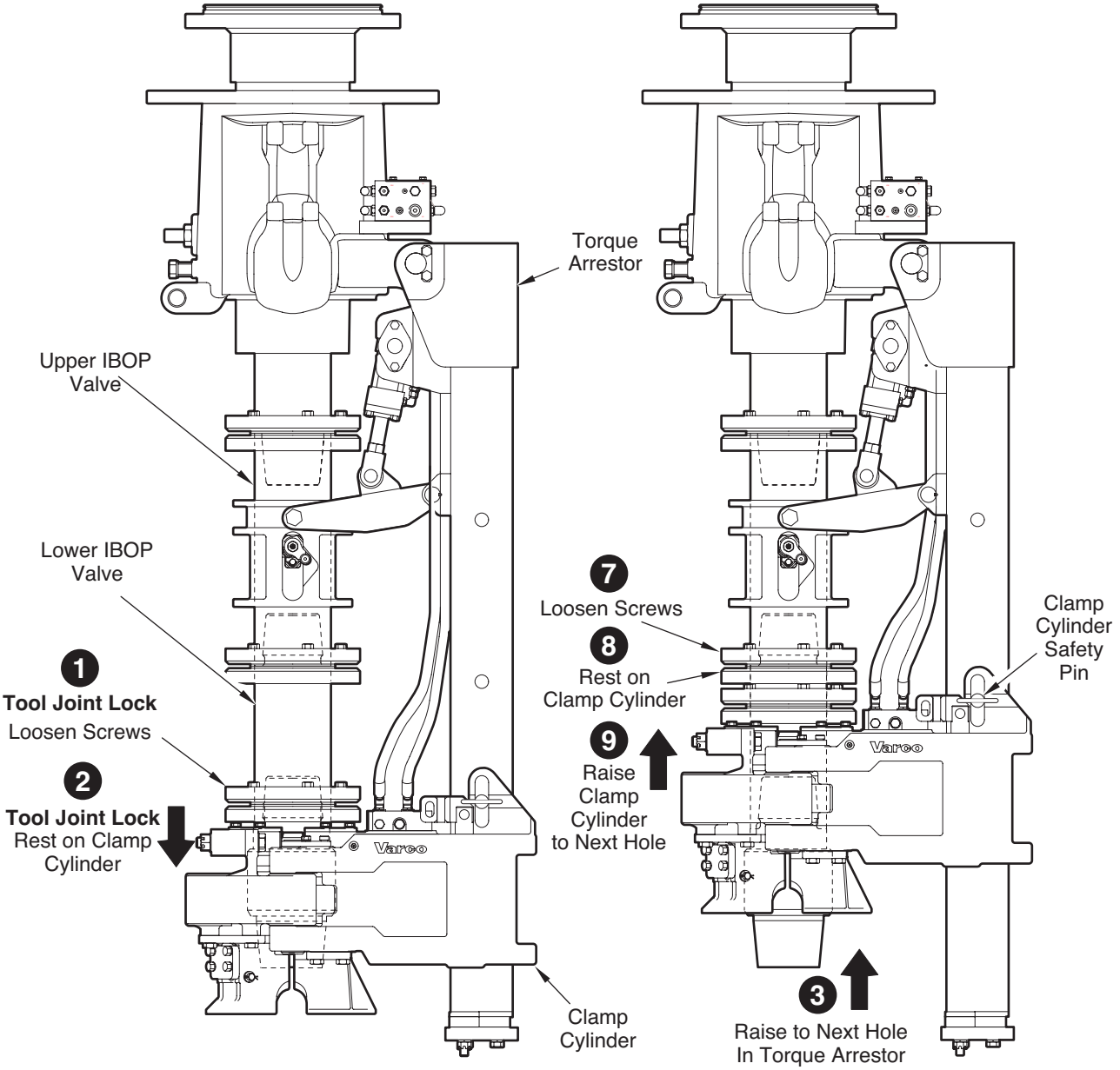

Using VDC: (Saver Stub Breakout)

4. Select **TORQUE** mode.
5. **TORQUE WRENCH** PUSH & HOLD.
6. Drilling Motor **REVERSE.**

Using VDC:

10. Select **TORQUE** mode.
11. **TORQUE WRENCH** PUSH & HOLD.
12. Drilling Motor **REVERSE.**
13. Drilling Motor **SPIN.**
14. Support Sub and Valve and Release From Torque Back-up Clamp Cylinder

Commissioning

Making up the lower IBOP

1. Screw in the replacement saver sub and the lower IBOP valve together manually and stand them under the clamp cylinder (a pup joint may be used to support it). Position the clamp cylinder by stabbing over the lower IBOP valve. Make sure the lower IBOP valve comes up through both tool joint locks sitting on the clamp cylinder body. Tighten four alternate screws on the top tool joint lock to secure it to the lower IBOP valve to provide a temporary shoulder to support the weight of the lower IBOP valve and the saver sub.

Make sure all four screws are tightened sufficiently so that the tool joint will not slide through when the clamp cylinder is raised.

2. Select SPIN and FORWARD modes.
3. Raise the clamp cylinder with the lower IBOP valve and saver sub while rotating the upper IBOP to engage the threads. Once the upper IBOP valve and the lower IBOP valve start to spin together, stop the drilling motor.
4. Lower the clamp cylinder and line up the first slot and hole on the clamp cylinder and the torque arrestor. The clamp cylinder jaws line up with the saver sub.
5. Select TORQUE mode. Pressurize the torque backup clamp cylinder to clamp on the saver sub by pressing and holding the TORQUE WRENCH PRESS AND HOLD button.
6. Switch the drilling motor to FORWARD. Select SPIN mode and rotate the drilling motor. Select TORQUE mode and apply desired torque and makeup both connections.
7. Release the TORQUE WRENCH PRESS AND HOLD button to unclamp. Lower the clamp cylinder all the way using the winch.
8. Loosen the temporarily made-up tool joint lock. Position both tool joint locks correctly and follow the proper assembly procedure described in the *Tool joint locks* section.

Commissioning

Breaking out the upper IBOP

Refer to the illustration on the next page. Remove the saver sub and the lower IBOP first, as described in the previous section.

The saver sub and the lower IBOP can be removed as one unit by breaking the connection between the upper and lower IBOPs.

1. Lower the clamp cylinder with the broken out lower IBOP valve and the saver sub.
2. Unclamp the lower IBOP valve/saver sub assembly by releasing the TORQUE WRENCH PRESS AND HOLD button.
3. Remove the two tool joint locks sitting on the clamp cylinder.

Stand clear. The lower IBOP valve and saver sub must be supported before unclamping them. They will fall through the bottom of the stabbing guide if not supported.

4. Remove the IBOP actuator yoke by unpinning it at three places.
5. Remove the two upper IBOP cranks by unscrewing the 2 sets of screws.
6. The IBOP actuator shell stays on the upper IBOP valve assembly.
7. Loosen the top tool joint lock and rest it on the actuator shell.
8. Raise the clamp cylinder with the actuator shell and the tool joint lock until the third slot and hole line up. Insert the pin.
9. Select TORQUE mode. Pressurize the clamp cylinder to clamp on the upper IBOP valve by pressing and holding the TORQUE WRENCH PRESS AND HOLD button and switch to REVERSE.
10. Switch the drilling motor to REVERSE to break the connection.
11. Once the connection is broken out, switch to SPIN and allow the motor to spin until the upper IBOP valve and drive stem separate.
12. Remove the safety pin. Lower the clamp cylinder with the upper IBOP. The upper IBOP is ready for removal from the clamp cylinder.
13. Unclamp the upper IBOP valve by releasing the TORQUE WRENCH PRESS AND HOLD button.
14. Remove the tool joint lock and the actuator shell.

Commissioning

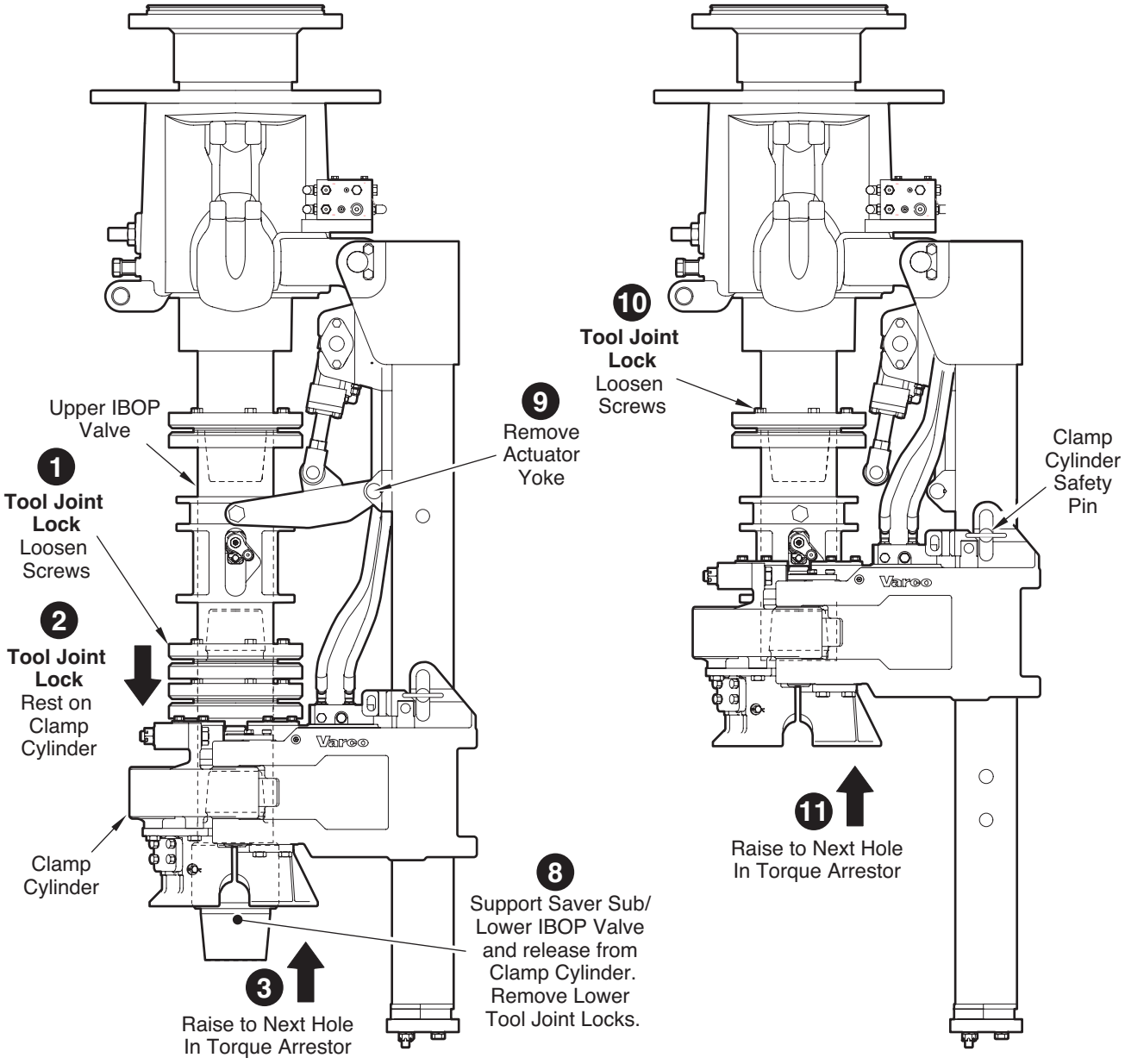

Using VDC:

4. Select **TORQUE** mode.
5. **TORQUE WRENCH** PUSH & HOLD.
6. Drilling Motor **REVERSE.**
7. Drilling Motor **SPIN.**

Using VDC:

11. Select **TORQUE** mode.
12. **TORQUE WRENCH** PUSH & HOLD.
13. Drilling Motor **REVERSE.**
14. Drilling Motor **SPIN.**

Commissioning

Making up the upper IBOP

1. Place the upper IBOP valve on the floor under the clamp cylinder so that the clamp cylinder can be stabbed over it (a pup joint may be used to support it). Lower the clamp cylinder so that the upper IBOP comes up through the clamp cylinder. Place the actuator shell and tool joint lock over the upper IBOP and tighten four alternate locking screws to secure it to the upper IBOP, providing a temporary shoulder to support its weight.
2. Install the actuator shell and the cranks.
3. Raise the clamp cylinder with the upper IBOP valve while rotating the drive stem clockwise to engage the threads. Once the drive stem and upper IBOP valve start to spin together, stop the motor, switch to FORWARD and SPIN and press and hold the TORQUE WRENCH PRESS AND HOLD button to spin in.
4. Spin the lower IBOP and saver sub into position (refer to the appropriate procedures in the previous sections). Make sure that the two tool joint locks are properly installed on the clamp cylinder and in the correct sequence.
5. Release the TORQUE WRENCH PRESS AND HOLD button to unclamp. Lower the clamp cylinder until it lines up with the first hole. Now the clamp cylinder is lined up with the saver sub.
6. Select TORQUE mode. Pressurize the clamp cylinder to clamp on the saver sub by pressing and holding the TORQUE WRENCH PRESS AND HOLD button and apply desired torque to makeup all three connections.
7. Place the three tool joint locks at their respective joints. Install the three tool joint locks by using the proper assembly procedure described in the *Tool joint locks* section.
8. Install the IBOP actuator yoke and secure it.
9. Remove the winch and store it in its box.

Decommissioning

Securing the TDS for rig-down

Procedure

- Lower the Top Drive to the drill floor
- Remove the mud hose, drill pipe elevator and links
- Power may be needed to turn rotating head into position for removing the links
- Locate the RIG-UP/RUN/SHUTDOWN valve on the hydraulic manifold
- With the hydraulic power ON select the “RIG-UP” position and remove the extended counterbalance cylinders from the hook ears
- Select the “SHUTDOWN” position and turn off the Top Drive
- Isolate and lock out ALL power to the Varco control house

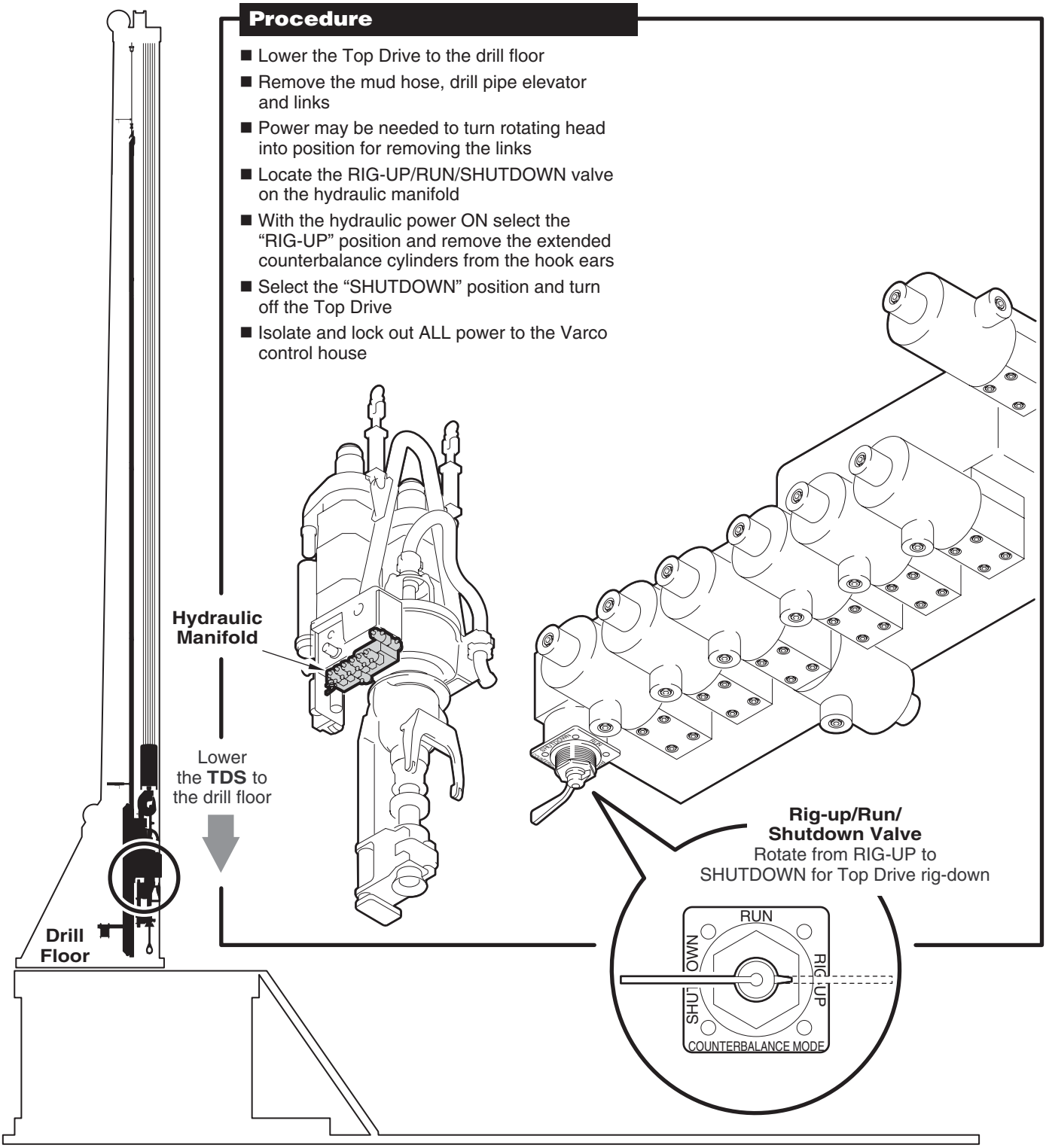

Decommissioning

Removing and storing the electrical cables and service loops

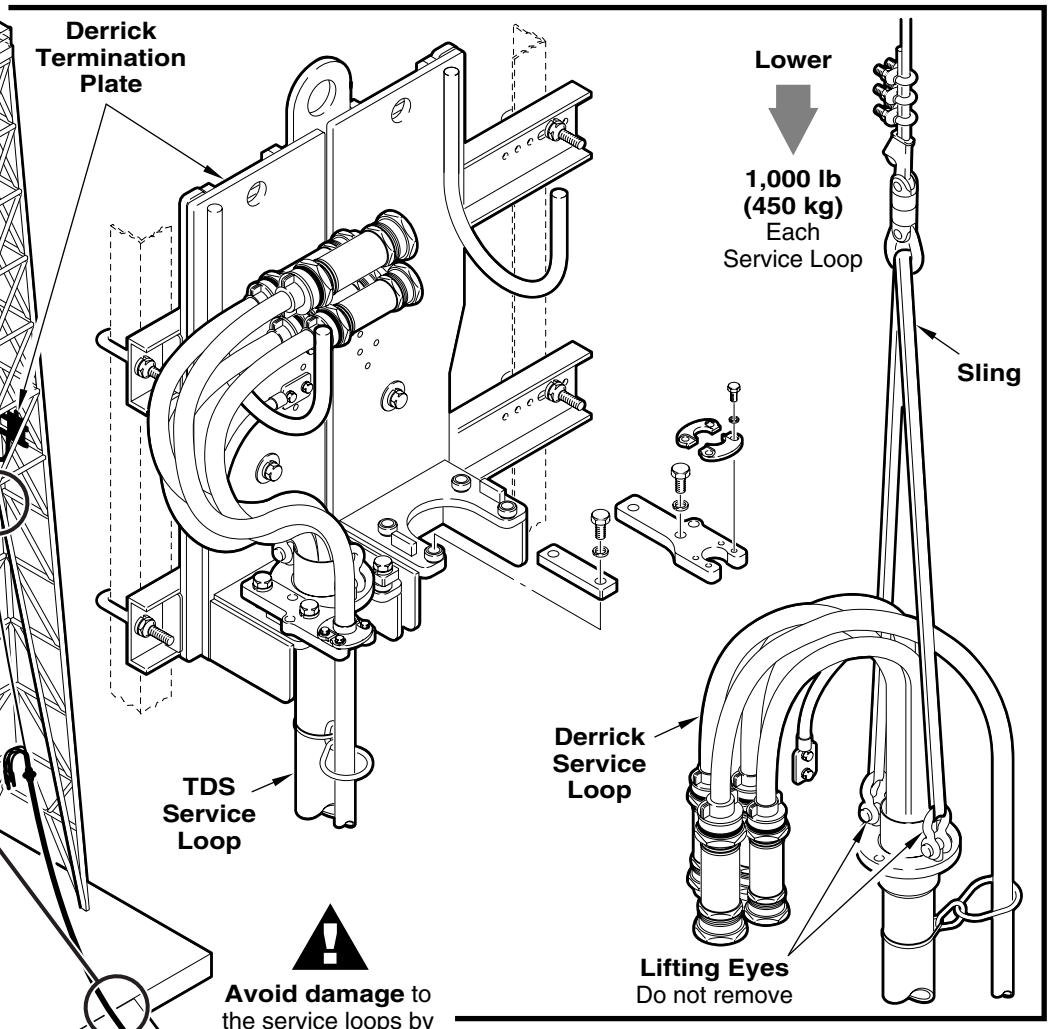

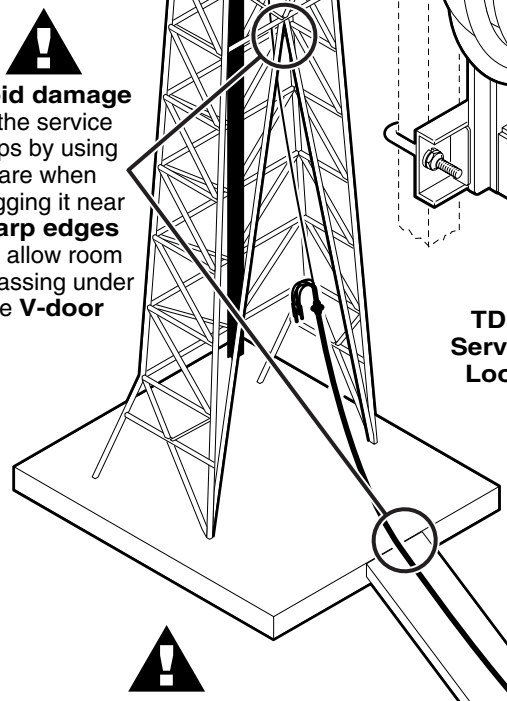

Avoid damage to the service loops by using care when dragging it near **sharp edges** and allow room for passing under the **V-door**

Avoid damage to the service loops by maintaining a **36 inch minimum bend radius**

An electrical short can occur if quick connectors are not kept clean and dry. Whenever separating quick connector(s), **immediately install the weather plugs** to prevent connectors from becoming contaminated with water or debris. When the connector is not in use secure/locate the connector so that is does not lie on the ground and make sure to minimize any exposure to water, mud, etc. Prior to re-connecting, inspect the inside of the connectors to make sure they are clean and dry.

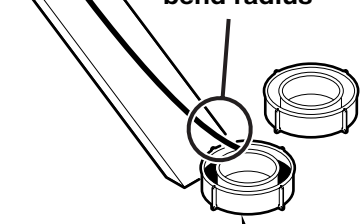

Service Loop and Storage Tub
3,600 lb
(1600 kg)

Procedure

- Position the service loop tubs for convenient loading of the service loops
- Disconnect the derrick service loop from the derrick termination plate and the control house
- Disconnect jumper cables (if installed)
- Cap all connectors and lower the derrick service loop into a service loop tub
- Use a sling attached to the lifting eyes to lower each service loop and a swivel at the tugger line attachment to allow each service loop to coil without twisting
- Disconnect the Top Drive service loop and repeat the above procedure
- Remove the service loop tubs from the area
- Remove the derrick termination plate if necessary

Decommissioning

Setting the latches and locking the bail

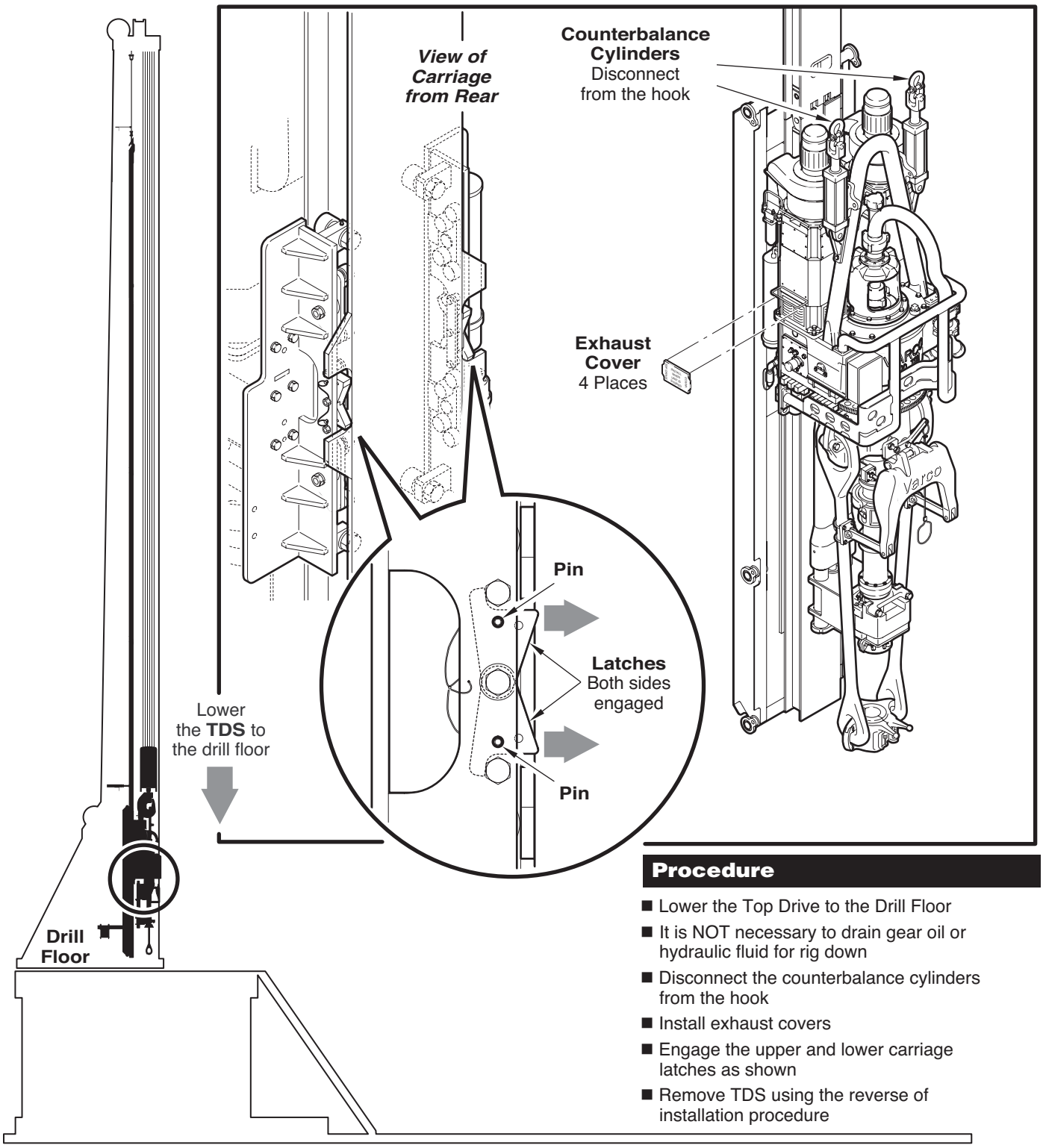

Procedure

- Lower the Top Drive to the Drill Floor
- It is NOT necessary to drain gear oil or hydraulic fluid for rig down
- Disconnect the counterbalance cylinders from the hook
- Install exhaust covers
- Engage the upper and lower carriage latches as shown
- Remove TDS using the reverse of installation procedure

Decommissioning

Long term storage procedures

Top Drive Long Term Storage Procedures

- For indoor storage, cover the Top Drive in its shipping and handling skid. A cargo container is appropriate for outdoor storage.
- Avoid wide variations in temperature and high humidity. The preferred environment is clean and dry at 60°-80F ambient.
- All exposed unpainted metal surfaces are coated with a rust preventive prior to shipment;however, check these surfaces periodically to be sure that no corrosion is taking place. The recommended rust preventive (slushing compound) for bare metal surfaces is Kendall Grade 5 (GE-D6C6A1) or equivalent. Make sure that the gearbox and hydraulic systems are properly filled. Use rust inhibitors where appropriate.
- Cover all openings to prevent water or dust from entering. Leave enough space around the drilling motors for ventilation. Do not use silica gel or a dehydrating agent.
- During storage, rotate the motors and gear train periodically to distribute lubricant. Perform this at three month intervals if stored indoors, and at one month intervals if stored outdoors.
- For long term storage recommendations dealing with the AC drilling motors, see the motor manufacturer's manual.

Returning the Top Drive to Service After Storage

- Remove all rust preventive and any corrosion that may have taken place, taking special care with load carrying components.
- Repaint the tool if necessary.
- Follow the return to service procedures in the AC drilling motor manufacturer's manual.
- Check for water and remove if any is found.
- Change the hydraulic fluid and gearbox oil.
- Lubricate the cooling and oil pump motors.
- Lubricate the tool with general purpose grease.
- Megger all motors (2 meg ohm on cold motor).

Inspecting the crown padeye and hang-off link

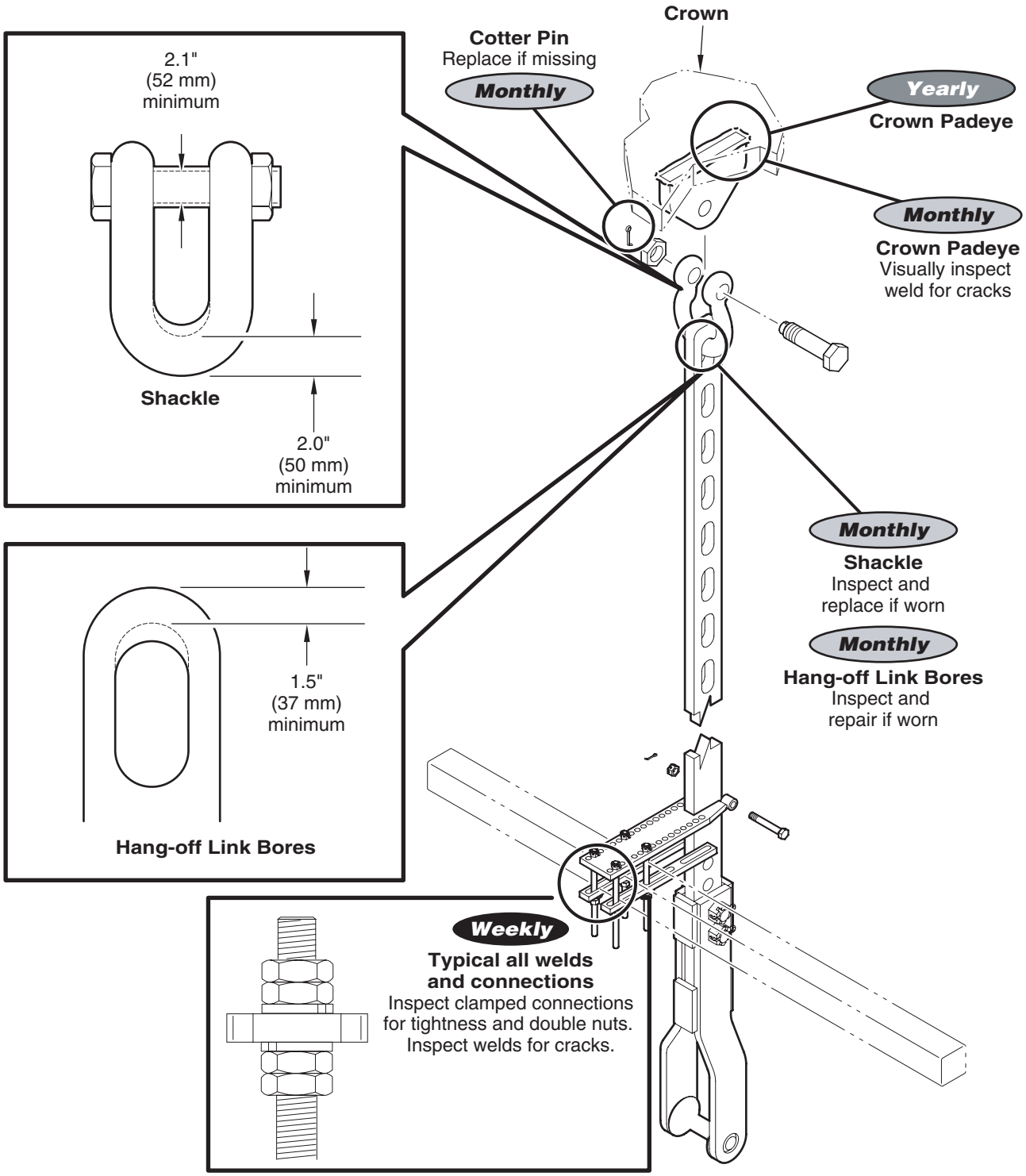

Inspecting the guide beam joints

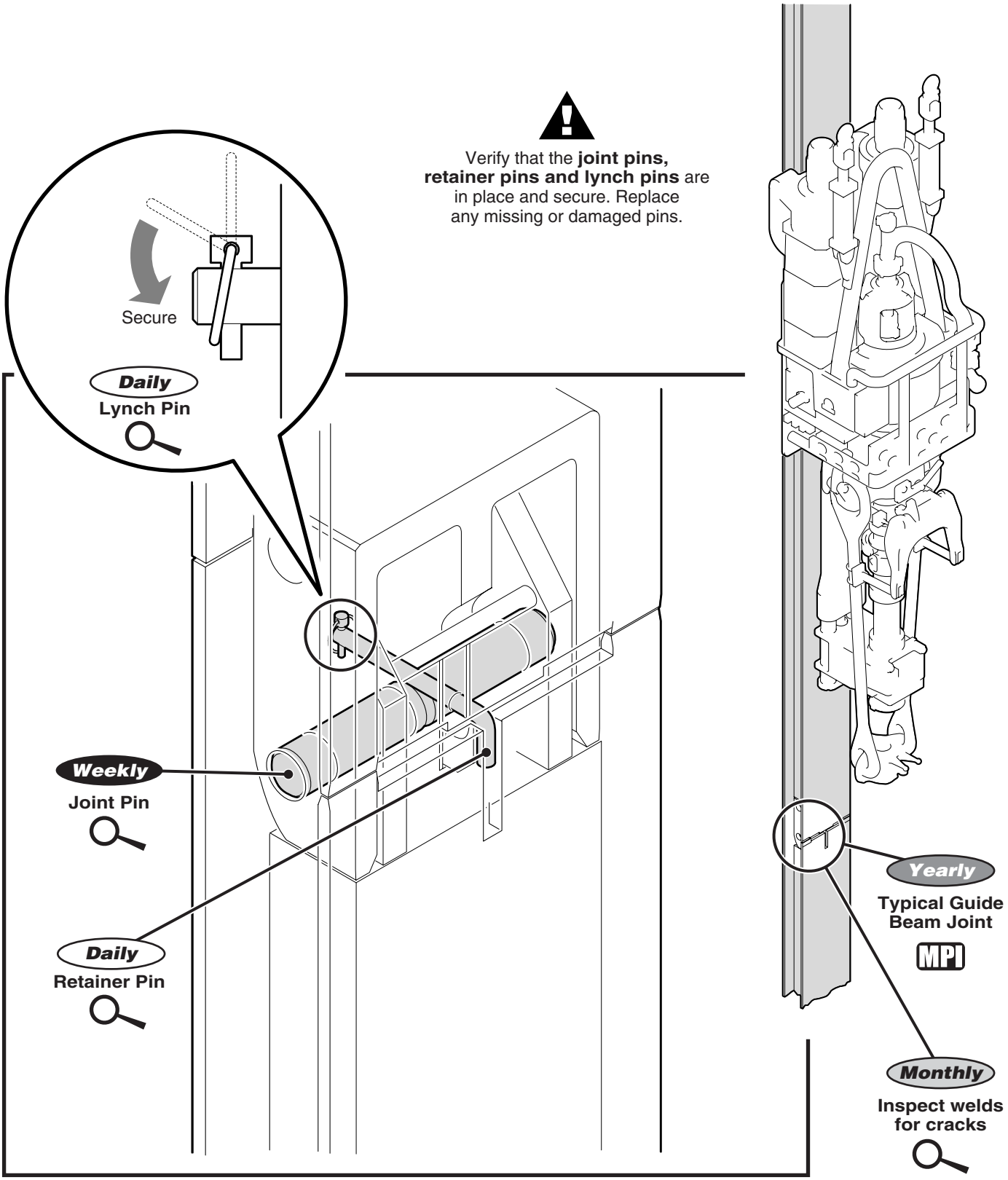

Inspecting the main tieback

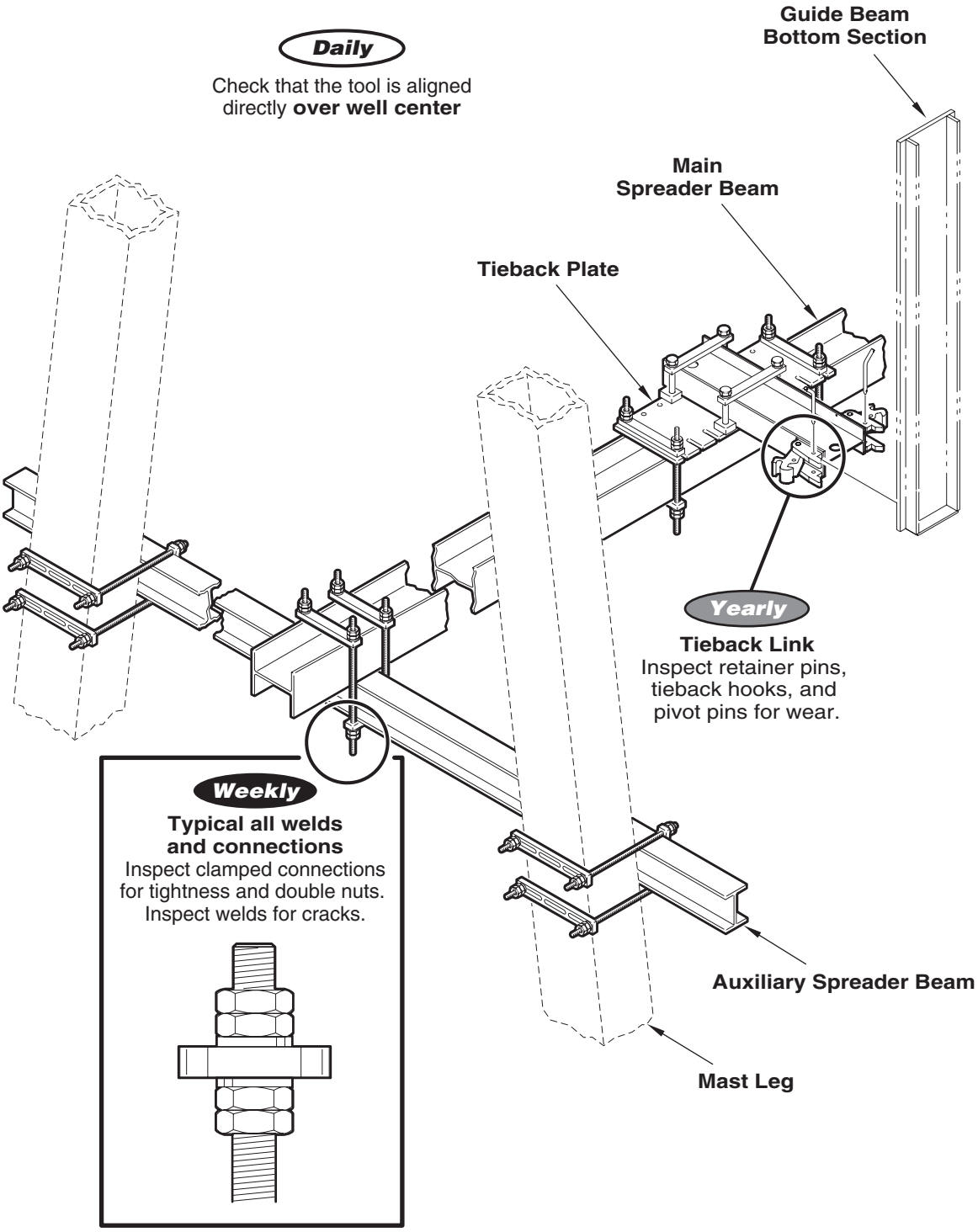

Inspecting the intermediate tieback

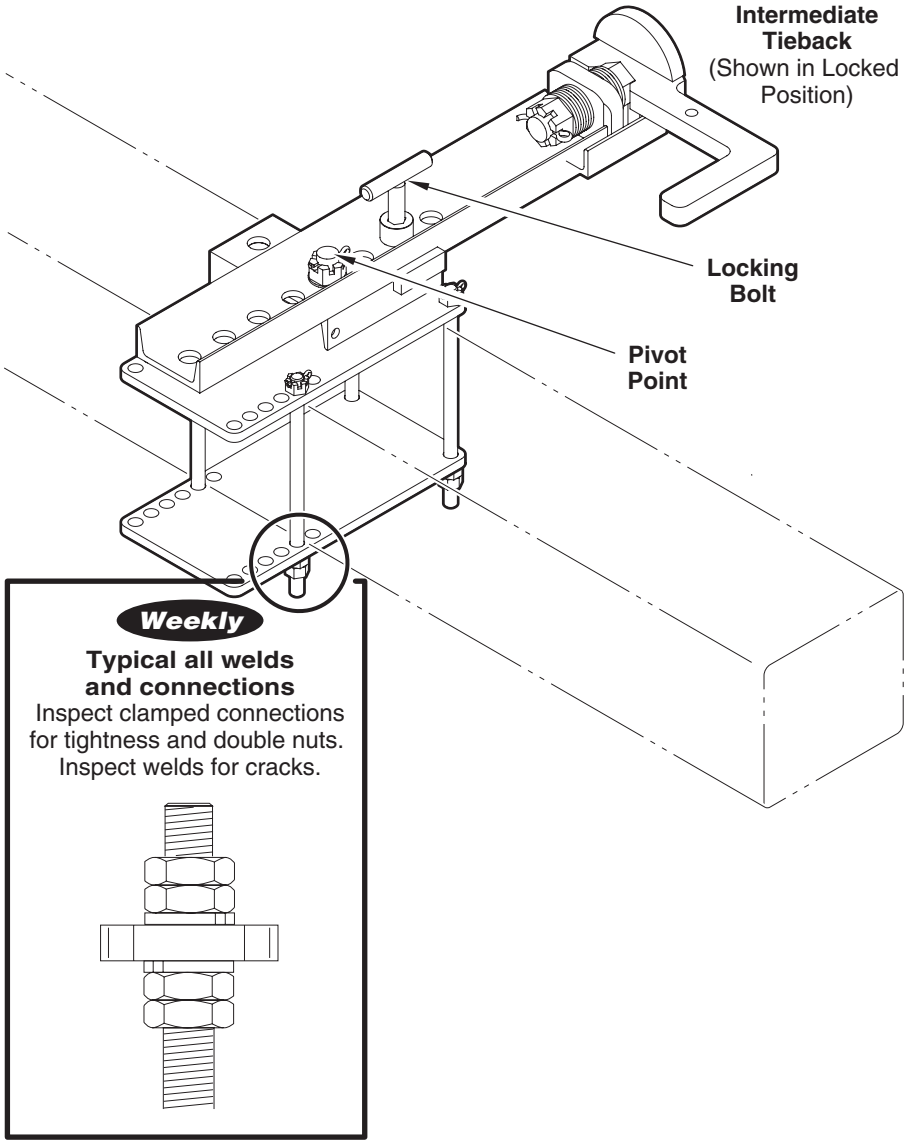

Inspecting the carriage

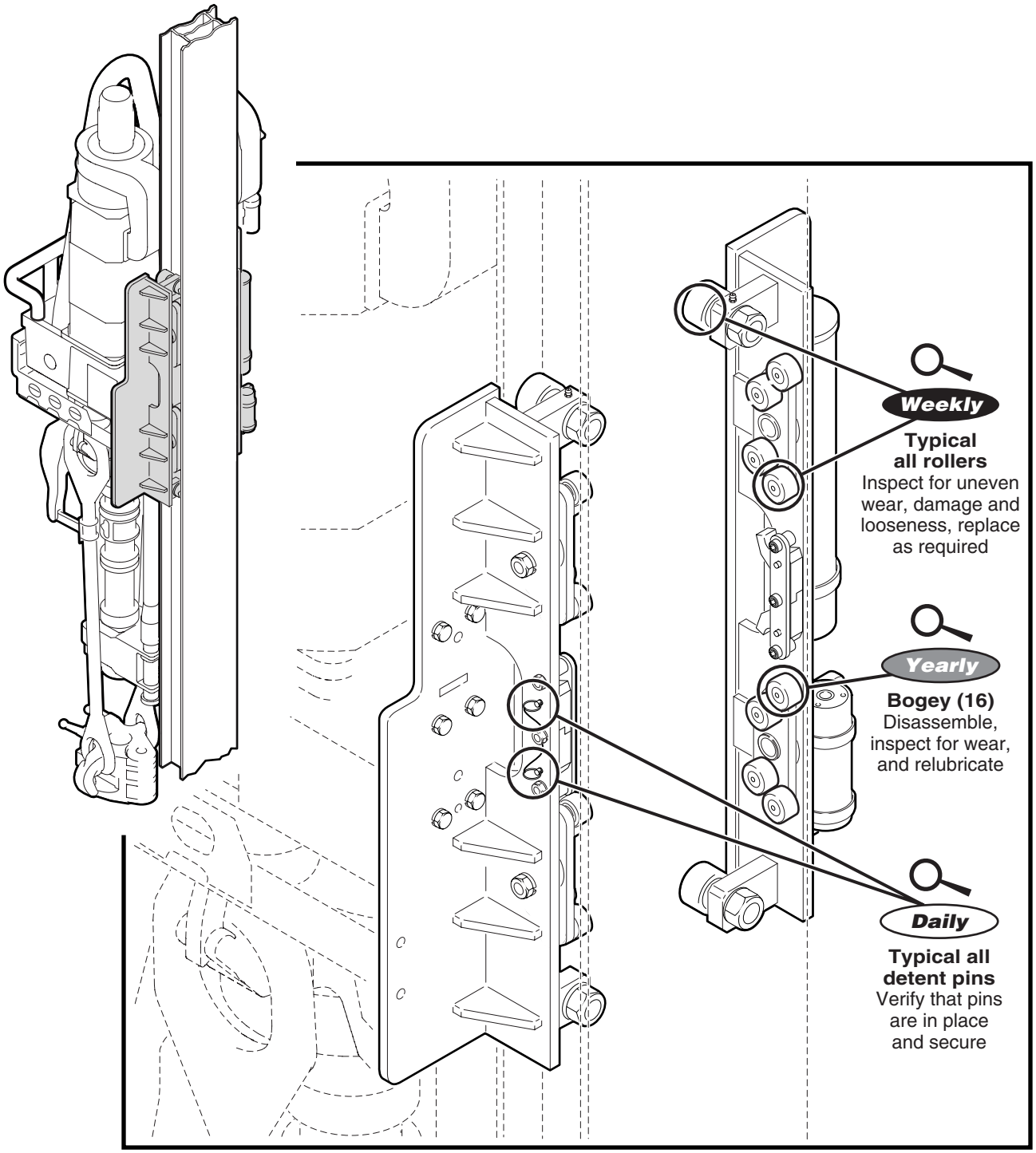

See *General Information* for torque values

Illustrated index

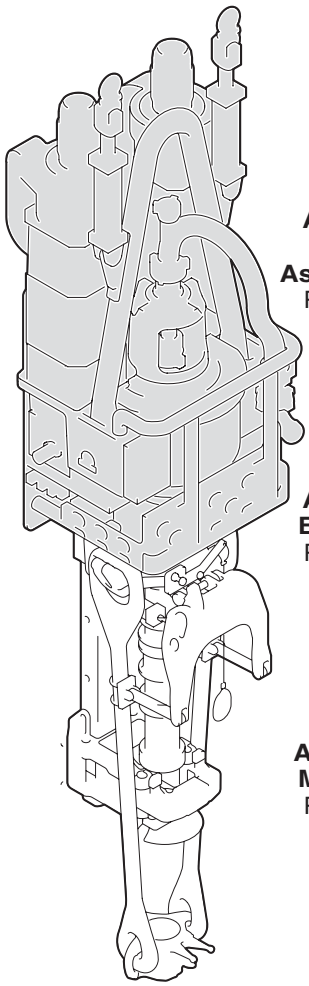

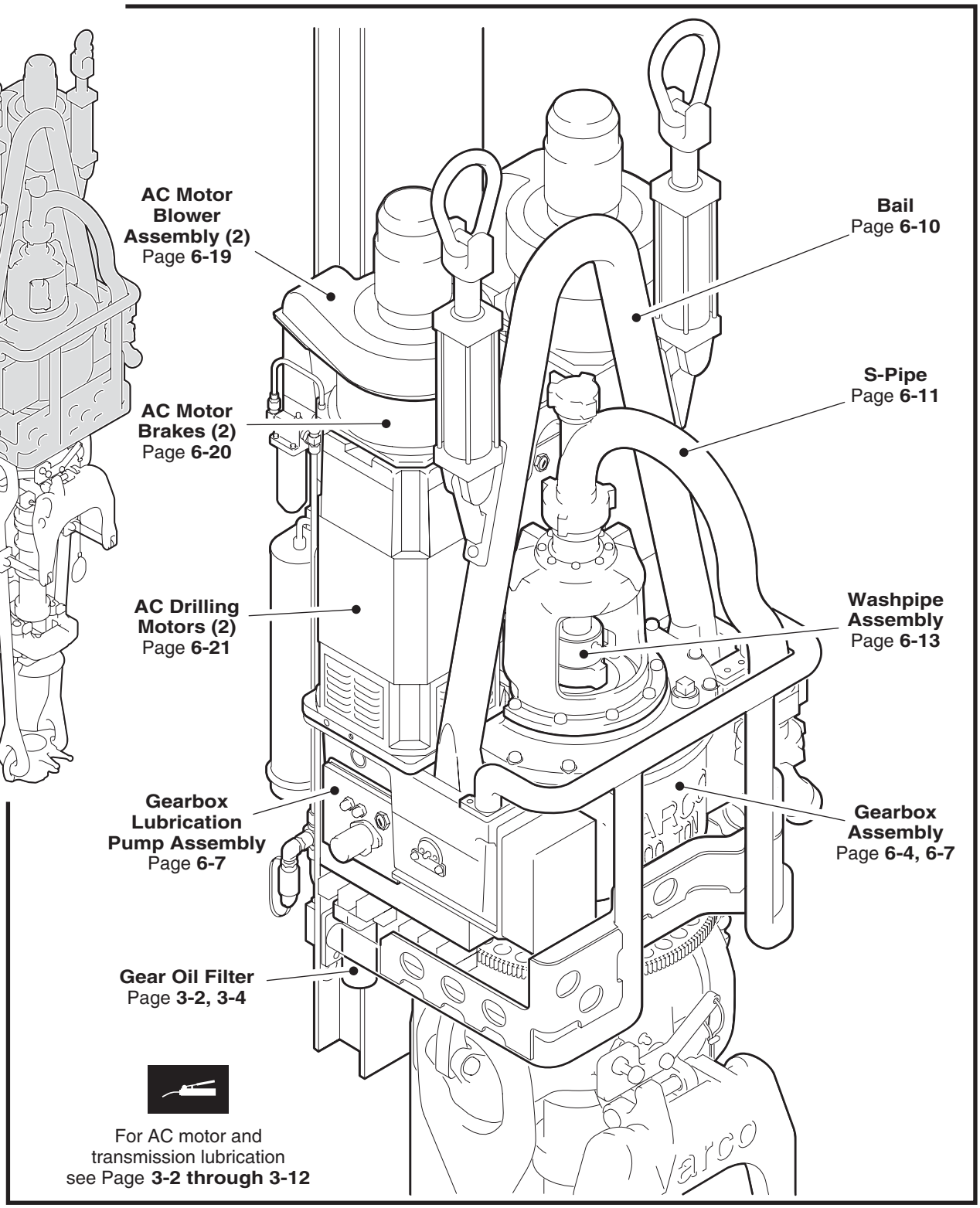

For AC motor and transmission lubrication see Page **3-2 through 3-12**

Inspection schedules

Daily	Page Number
Check for missing lockwire and cotter pins	
Check for loose or broken parts and leaks	
Check for damaged hoses and fittings	
Check the wash pipe assembly for leaks	See page 6-13
Check fluid levels and filter condition	See page 3-4
Weekly	
Check the AC motor louvers for damage	See page 6-21
Check the AC motor screens for contamination	See page 6-21
Monthly	
Check the flow of oil throughout the main body while the lube pump is running	See page 6-4
Check the blower motor assemblies for loose bolts	See page 6-19
Check brake pads for wear	See page 6-20
6 Months	
Check the gear teeth for pitting and corrosive wear	See page 6-9
Check for primary and secondary gear set backlash	See page 6-9
Check the S-pipe for pitting, corrosion, or erosion	See page 6-11
Check the upper mainshaft liner for erosion caused by leaking wash pipe packing	See page 6-12
Yearly	
Check the gearbox lubrication pump assembly for wear or damage	See page 6-8
Check bail, bushings and bail pins for wear	See page 6-10
Check the upper bearing retainer o-ring, bearing isolator, and oil seal for wear	See page 6-16
Check the radial grooves on the stem and the load collar for wear	See page 6-17
Check the mainshaft for axial movement	See page 6-18
Megger motors	
5 Years	
Magnetic particle inspection (MPI)	See page 6-24

Inspecting the internal lubrication flow

Procedure

- Remove the 3 in pipe plugs from the main body and check the flow of oil coming from the four spray nozzles (two in the body, two in cover) while the lube pump is operating
- Check that oil is running out of the upper gear drain holes in each compound gear set (indicates upper orifice is not blocked) and that oil is running through the spillway running from the thrust bearing (indicates orifice is not blocked)

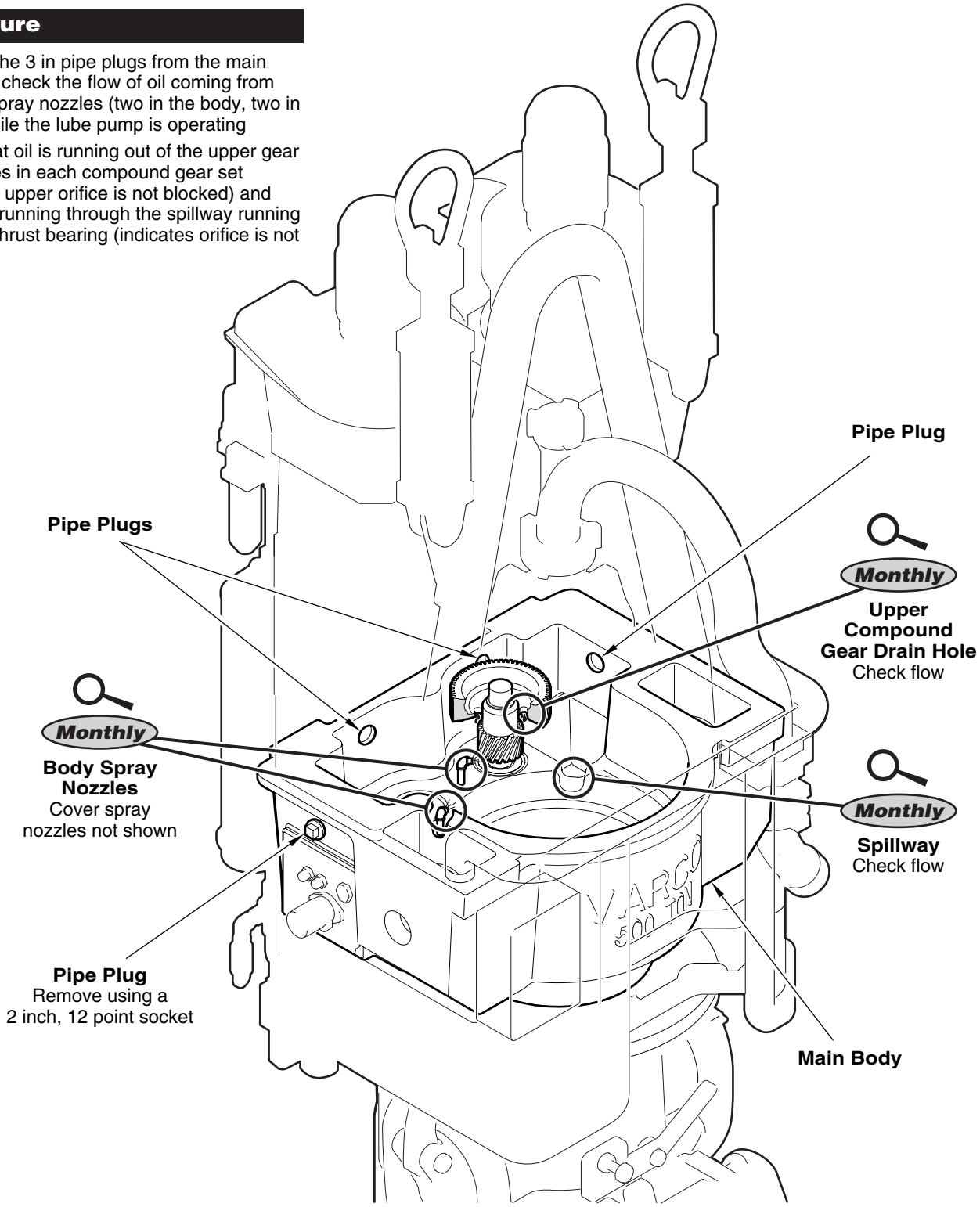

Adjusting the encoder

Use the following procedure to adjust the encoder belt tension:

1. Remove the access covers
2. Disconnect all of the electrical connectors from the encoder.
3. Remove the lockwire and loosen the four sled hold-down screws.
4. Allow the sled to move freely, allowing the belt tension spring to apply the proper tension to the belt.

Do not tension the belt by hand.

5. Carefully tighten the sled hold-down screws and torque them to 7 ft lb.
6. Lockwire the sled hold-down screws.
7. Reconnect the encoder electrical connections.
8. Replace both access covers and tighten the access cover screws to 15 ft lb and lockwire them.

Adjusting the encoder

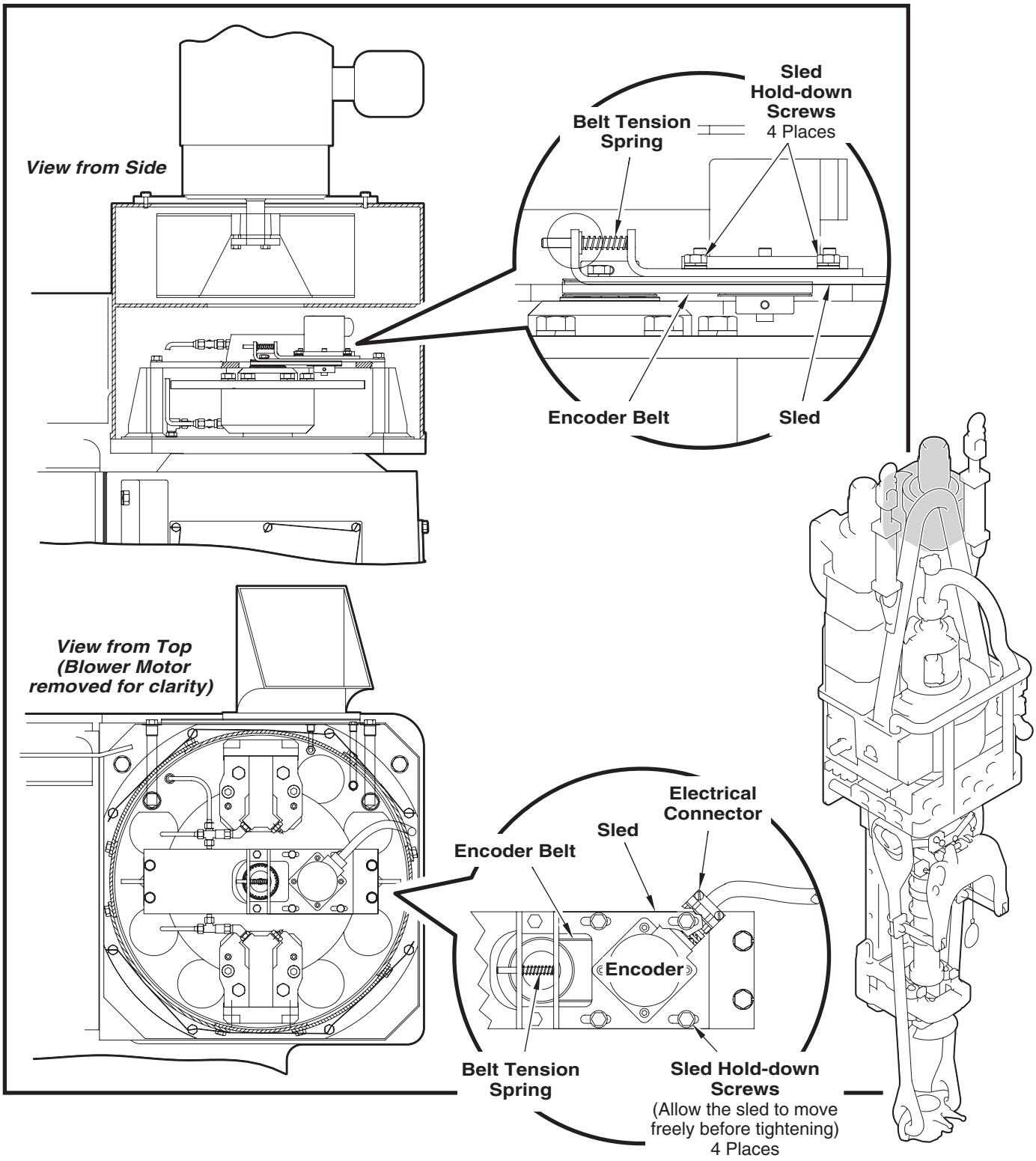

Gearbox lube pump assembly

Disassembling/assembling the gearbox lube pump

Disassemble the gearbox lubrication pump assembly and inspect the pump assembly components yearly for wear and damage as follows:

1. Drain the gearbox oil and disconnect the hydraulic lines from the pump assembly
2. Remove the pump assembly by removing the eight lockwired capscrews that attach the pump adapter plate to the main body
3. Disassemble the spline adapter, pump, and housing using the pump vendor service instruction HS15 (located in the Vendor Documentation Package)
4. Inspect the pump assembly components, replacing any parts that are worn or damaged. Pay particular attention to the spline between the pump and motor, the gears, and the motor and pump sideplates.
5. Assemble the lubrication pump assembly in the reverse order of disassembly

Follow the pump vendor service instruction HS15 (located in the Vendor Documentation Package) when assembling the lubrication pump components, and torque all fasteners in accordance with DS00008.

When reinstalling the pump assembly into the main body, inspect the O-ring for damage and replace the O-ring if any flat spots, nicks, or other damage is found.

6. Install the pump assembly into the main body. Torque the fasteners in accordance with DS00008, and reconnect the hydraulic and electrical connections.

Gearbox lube pump assembly

Inspecting the gearbox lube pump assembly

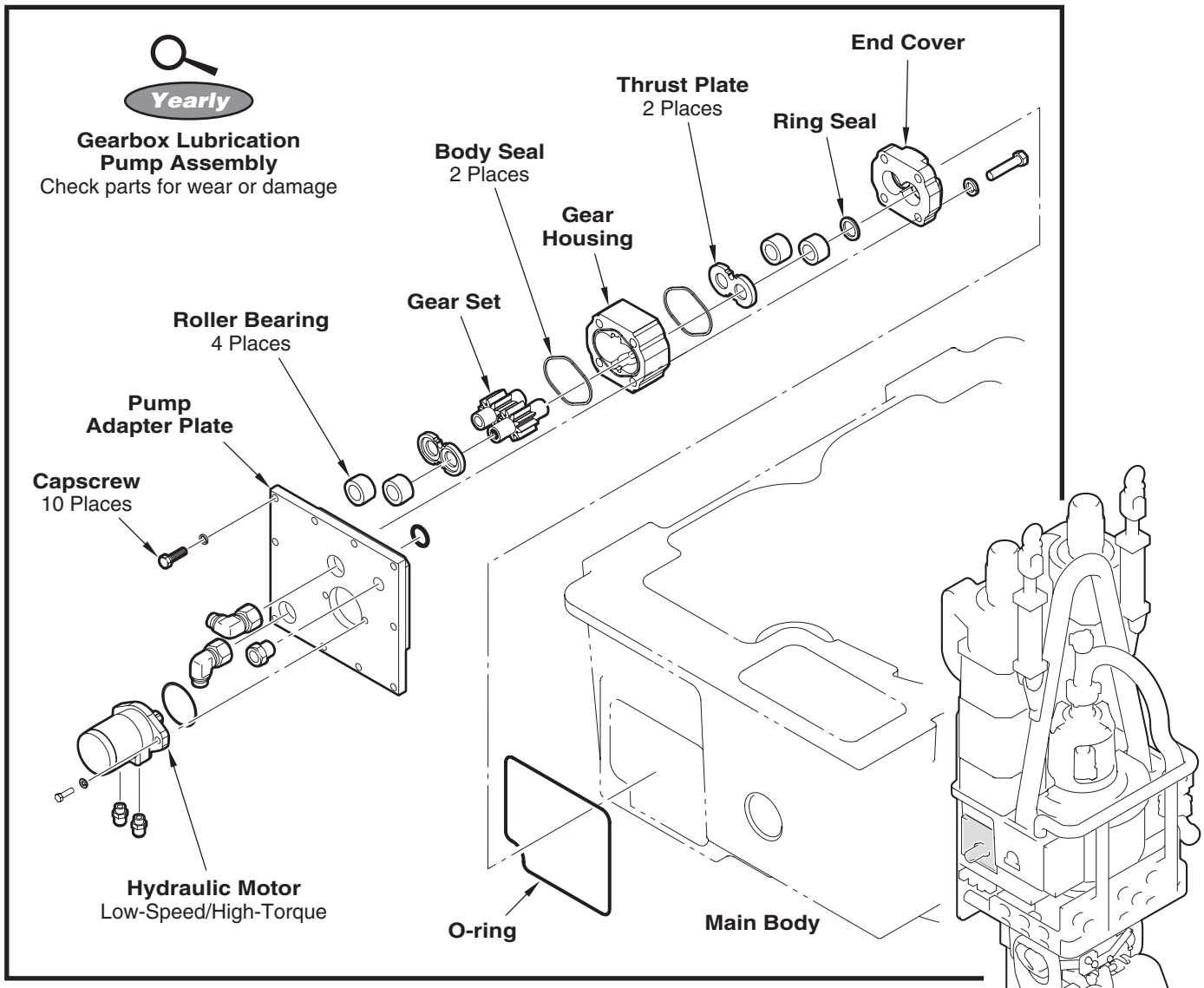

Procedure

- Drain the gearbox oil and disconnect the hydraulic lines from the pump assembly
- Remove the pump assembly by removing the ten lockwired capscrews that attach the pump adapter plate to the main body
- Disassemble using the drawings in the *Technical Drawing Package* as well as the pump vender service instruction
- Inspect and relace any parts that are worn or damaged

Inspecting gear backlash

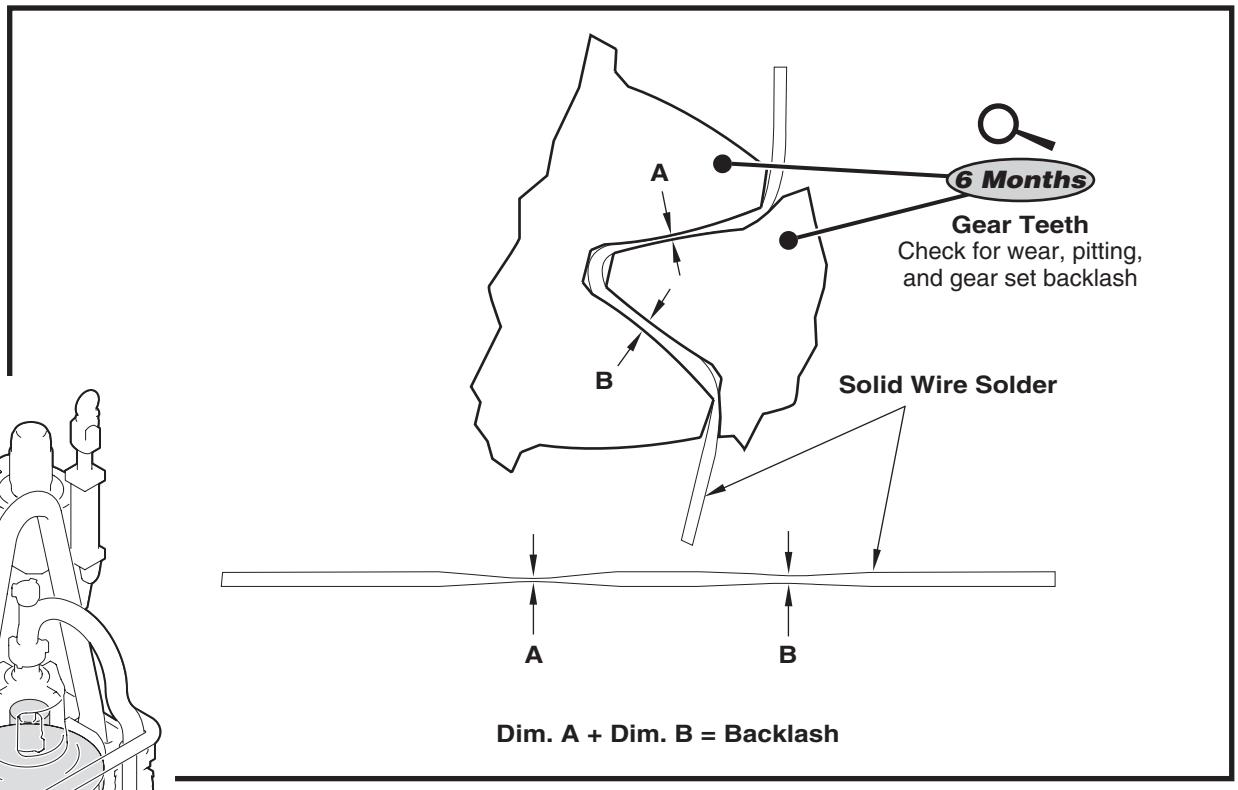

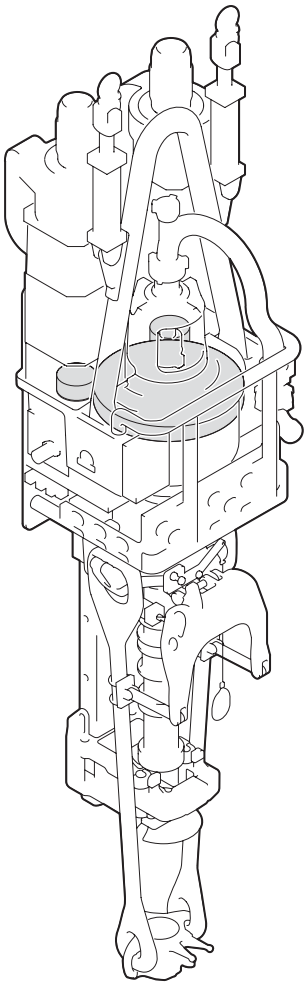

Procedure

Inspect the pump adapter plate at the same time the gear backlash is checked

- Drain the gearbox oil
- Remove the access cover and the pump adapter plate to check primary and secondary gear set backlash
- Run a piece of solid wire solder through the primary and secondary gear meshes and measure the thickness of the two flat spots made by the gear teeth surfaces with a micrometer
- If the primary gear mesh backlash exceeds .030 in. or the secondary gear mesh backlash exceeds .040 in., excessive gear wear or bearing failure may be indicated

Check the gear teeth for pitting or corrosive wear at the same time the gear set backlash is checked

Record backlash data for future reference

Inspecting the bail and main body

Wear allowances

Component	Replace when
Bushing	Inner diameter is more than 4.450 in.
Bail Pin	Outer diameter is less than 4.125 in.

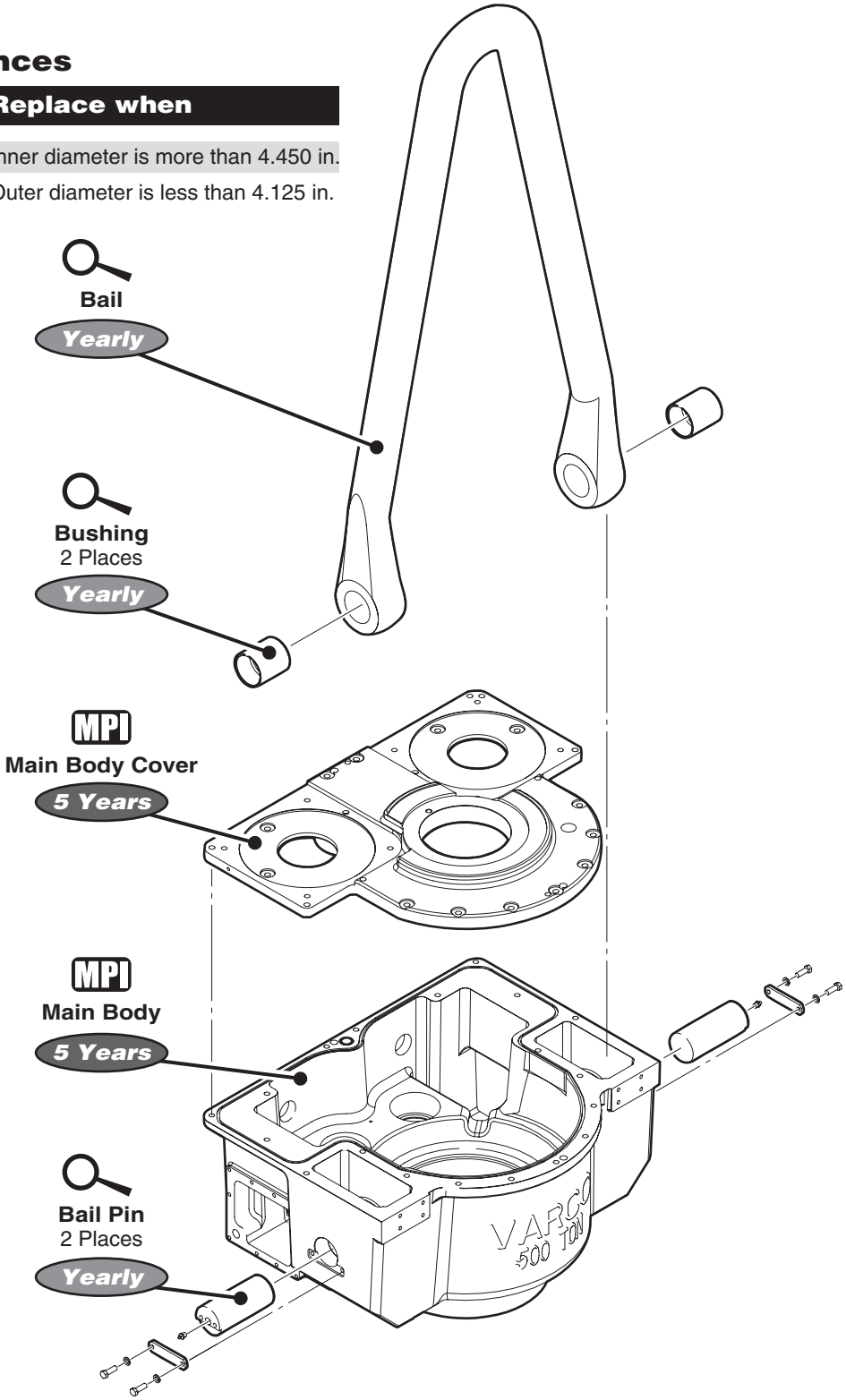

Inspecting the S-pipe

Procedure

- Unscrew the two nuts that hold the S-pipe in place along with the six bolts that secure the clamp to remove and inspect the S-pipe
- Clean the bore of the S-pipe and inspect for visible signs of pitting, corrosion, or erosion

Use a flashlight and mirror to visually inspect the bore of the S-pipe. A Bore-o-Scope is best for inspection, if available.

- Remove and perform an ultrasonic inspection on the S-pipe if visual inspection indicates erosion or corrosion
- Check condition of the seals
- Apply pipe dope to the threads before re-installing

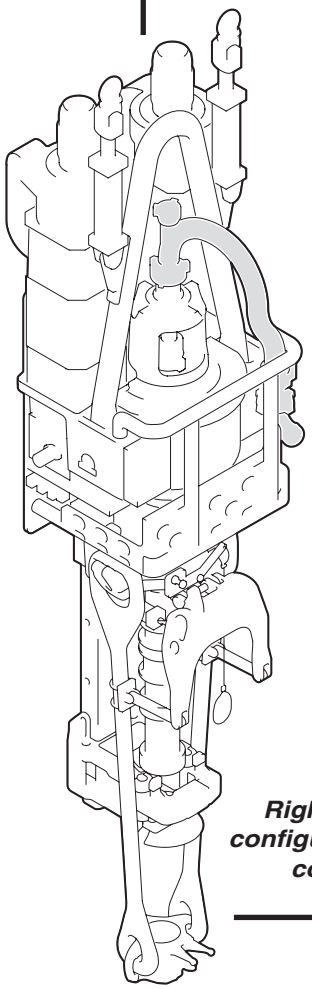

Right-hand (inside of guard) configuration shown. Your S-pipe configuration may vary.

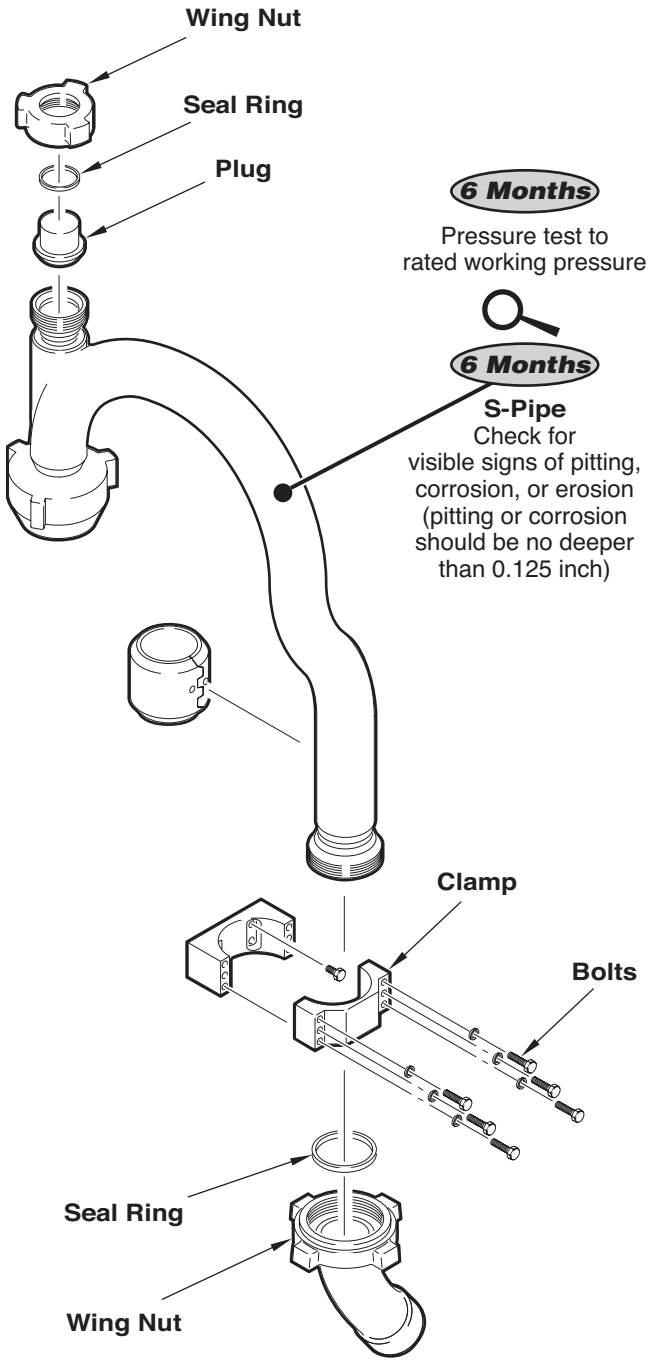

6

Inspecting the upper mainshaft liner

Procedure

- Remove the wash pipe assembly
- Check the upper mainshaft liner for erosion caused by leaking wash pipe packing and replace the liner if erosion is found. The upper surface of the mainshaft liner must be flat and smooth

The Polypack Seal must also be replaced whenever the upper stem liner is replaced

- Grease the Polypack Seal and clean the mainshaft bore before re-installing
- Make sure the O-ring of the seal is facing

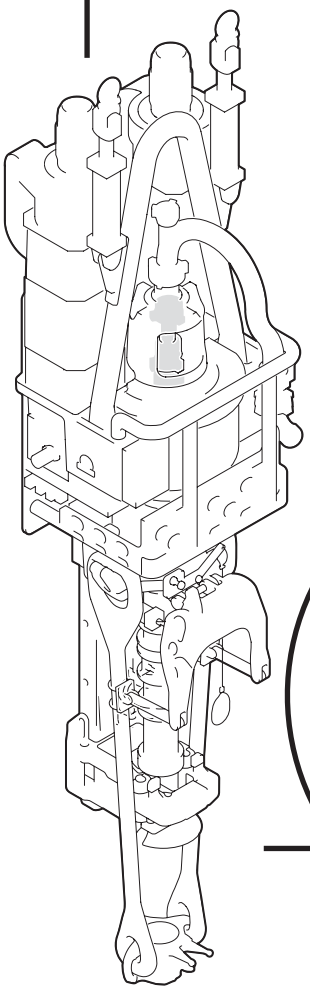

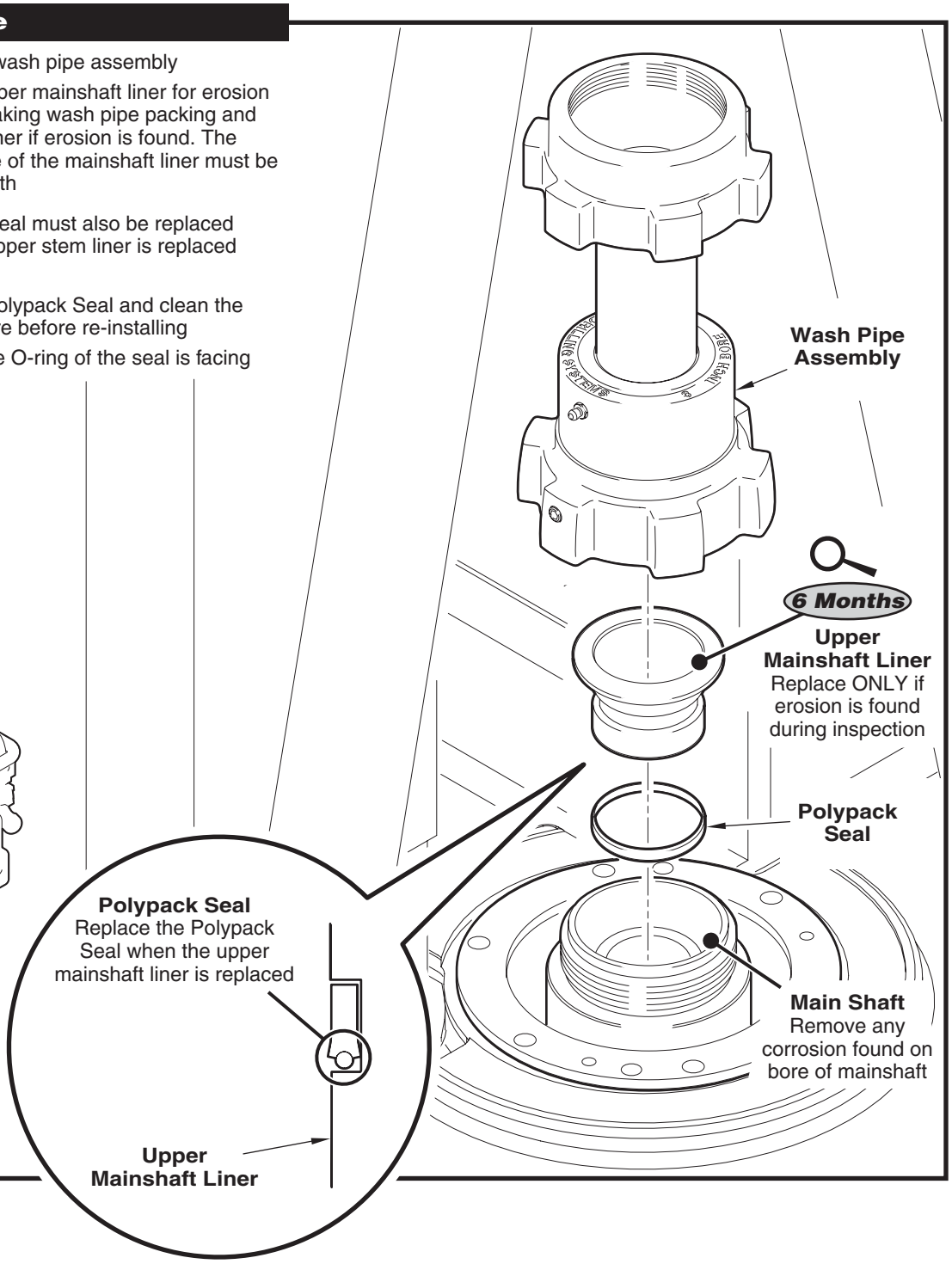

Washpipe assembly

Assembling the washpipe assembly

1. With the packing box upside down, assemble the packing seals and spacers into the packing box using care to line up the upper spacer slot with the dowel pin.
2. Hand pack all seals with multipurpose lithium-based or high temperature moly-based grease using care not to grease the outside diameter of the spacers.
3. Install the socket head dog nose screw, ensuring that the screw nose is fully engaged in the groove of the lower spacer.
4. Install the grease fitting and turn the packing box upright.
5. Install the wash pipe into the packing box assembly (slotted end up).
6. Install the wash pipe nut onto the wash pipe.
7. Grease the packing seal and install into the holding ring using care not to grease the outside diameter of the holding ring.
8. Install the packing seal and holding ring over the slotted end of the wash pipe.
9. Install the snap ring.
10. Install the upper and lower o-rings using grease to hold them in place.
11. Compress the assembly to the length of the wash pipe.

Disassemble the washpipe packing in the reverse order of the above procedure. Refer to the *Washpipe Assembly Guide*, P/N 128844.

Washpipe assembly

Inspecting the washpipe assembly

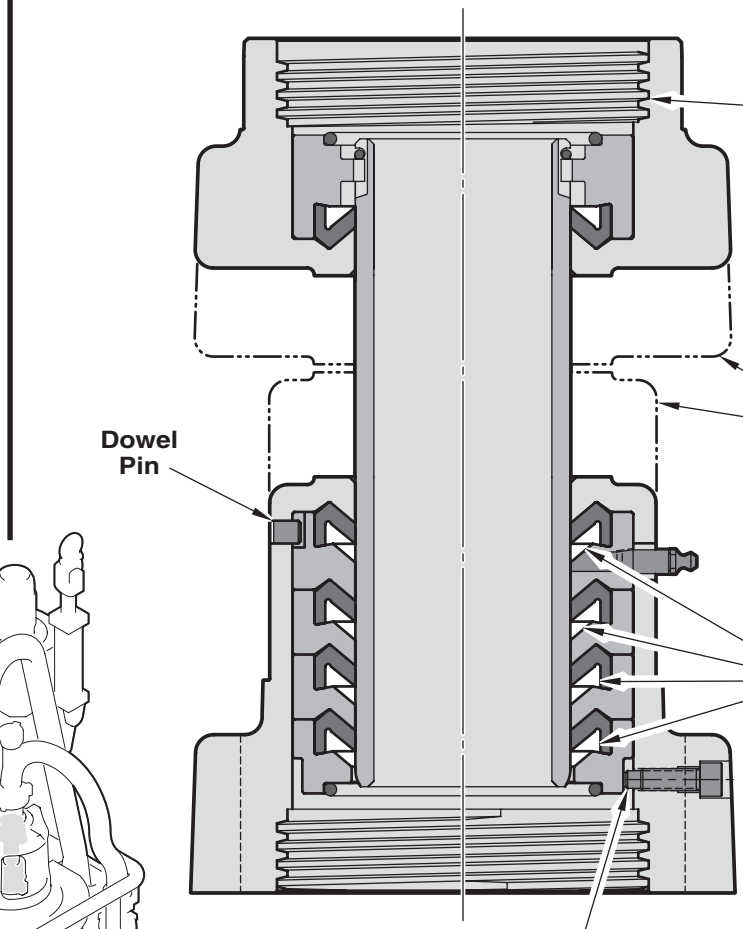

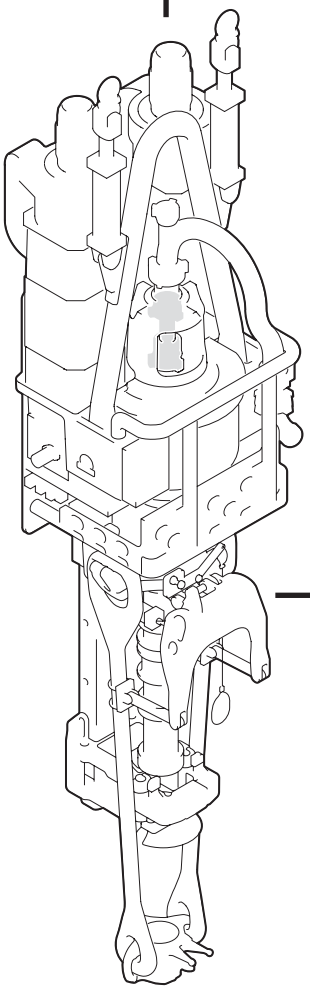

Special Tools

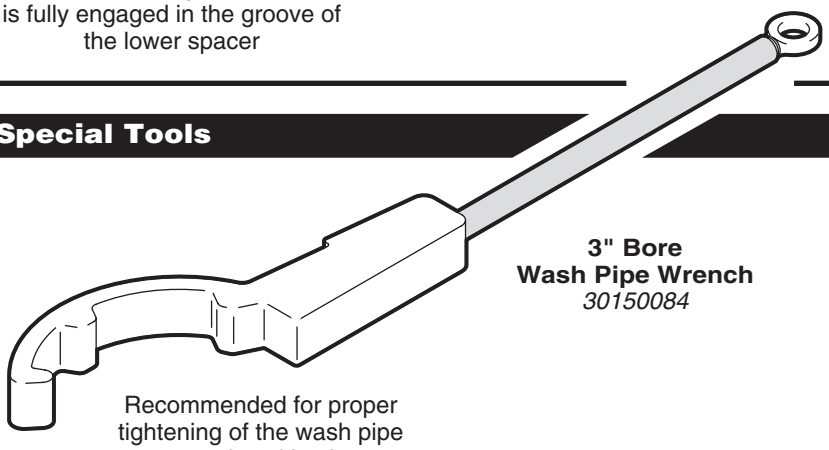

3" Bore Wash Pipe Wrench
30150084

Recommended for proper tightening of the wash pipe nut and packing box

Washpipe assembly

Inspecting the washpipe assembly

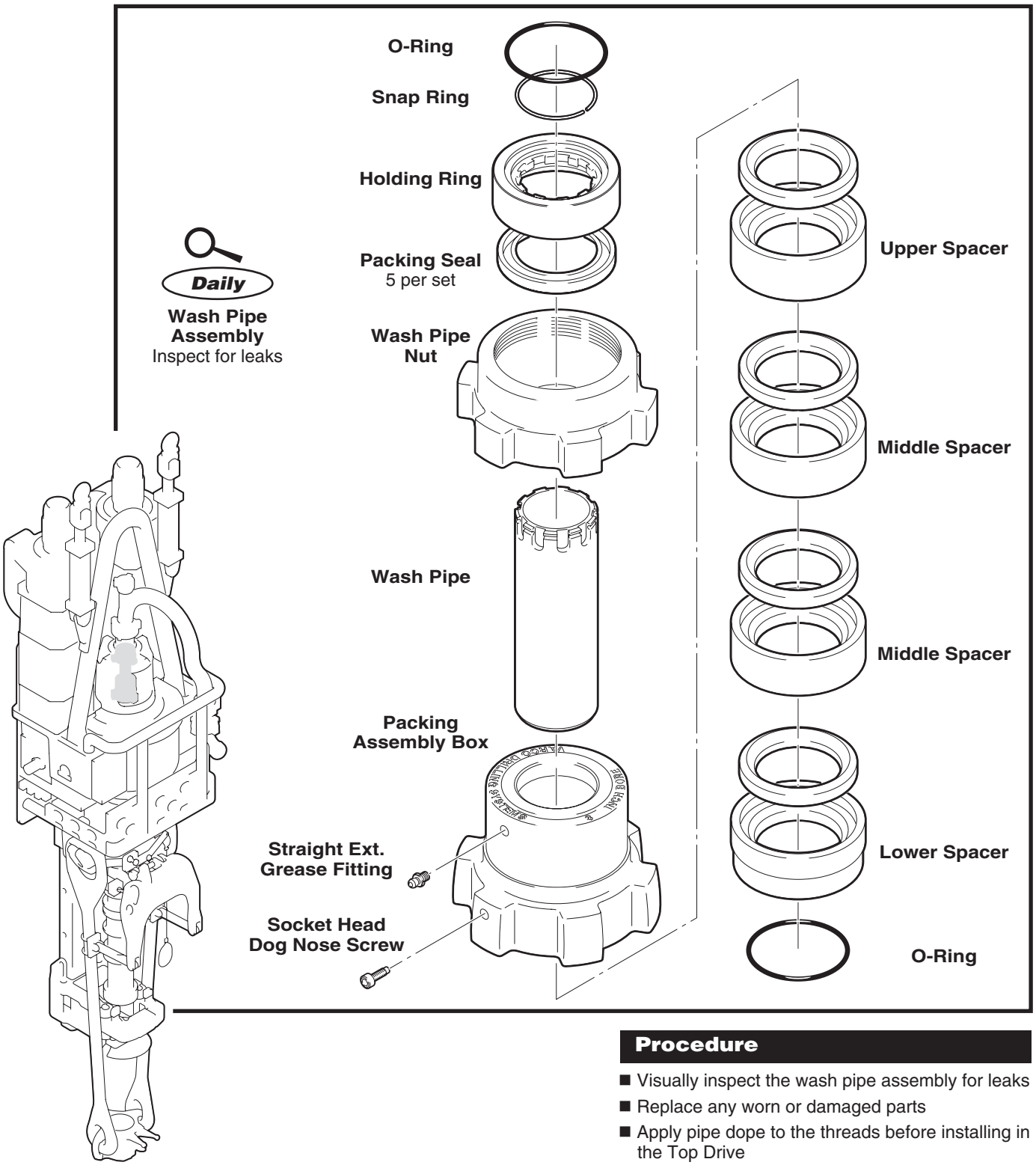

Procedure

- Visually inspect the wash pipe assembly for leaks
- Replace any worn or damaged parts
- Apply pipe dope to the threads before installing in the Top Drive

Inspecting the upper bonnet seals

Procedure

- Remove the bearing shield, the bearing retainer cap screws, and the bearing retainer
- Inspect the bearing isolator, the oil seal, and the retainer o-ring for wear
- Replace any worn or damaged parts

Align the shims so that the bearing lube tube bore is not blocked

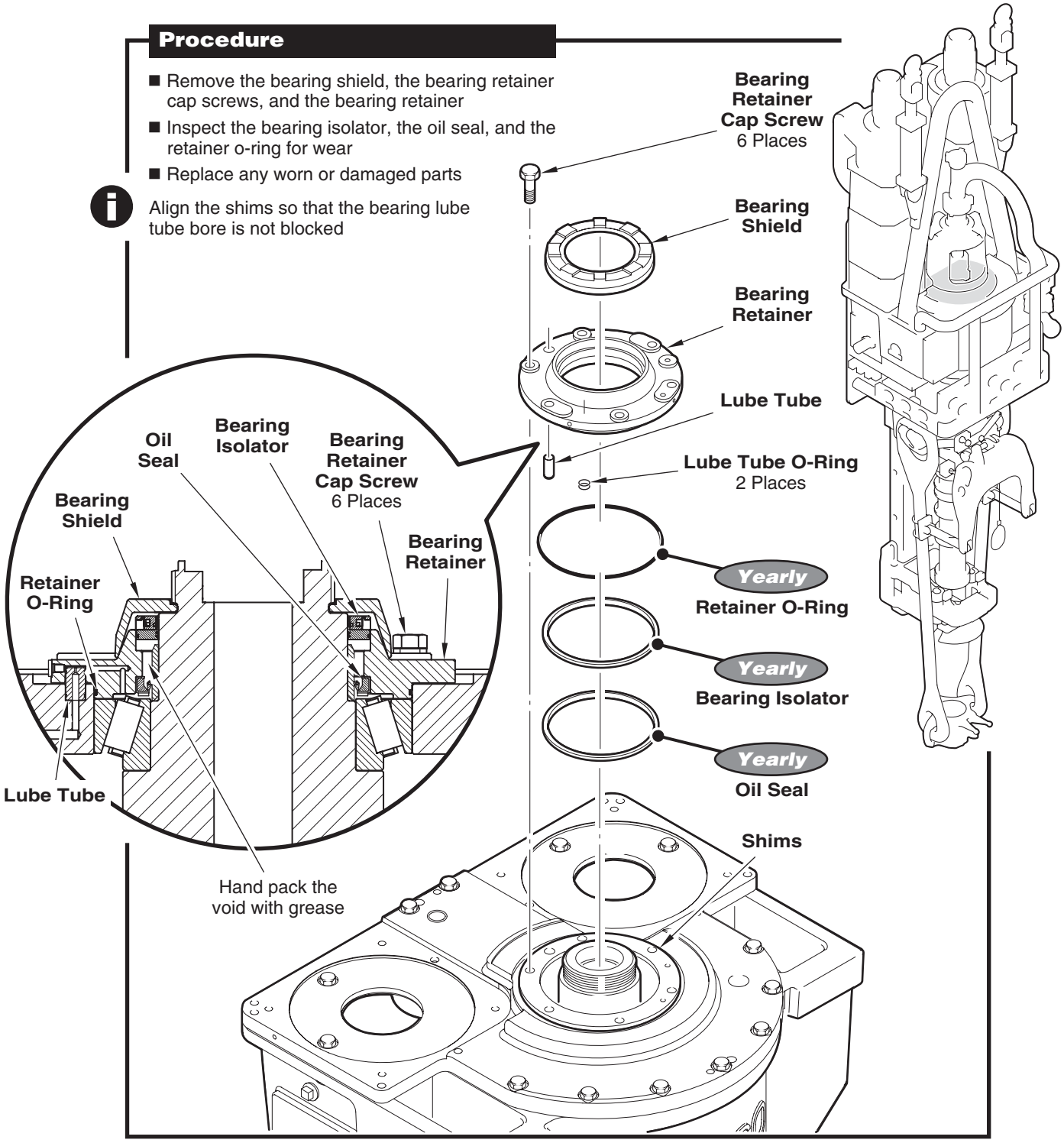

Mainshaft

Inspecting the mainshaft

Wear allowances

Component	Replace when
Stem Grooves	Groove width exceeds 0.650 in.
Load Collar Grooves	Groove width is less than 0.620 in.

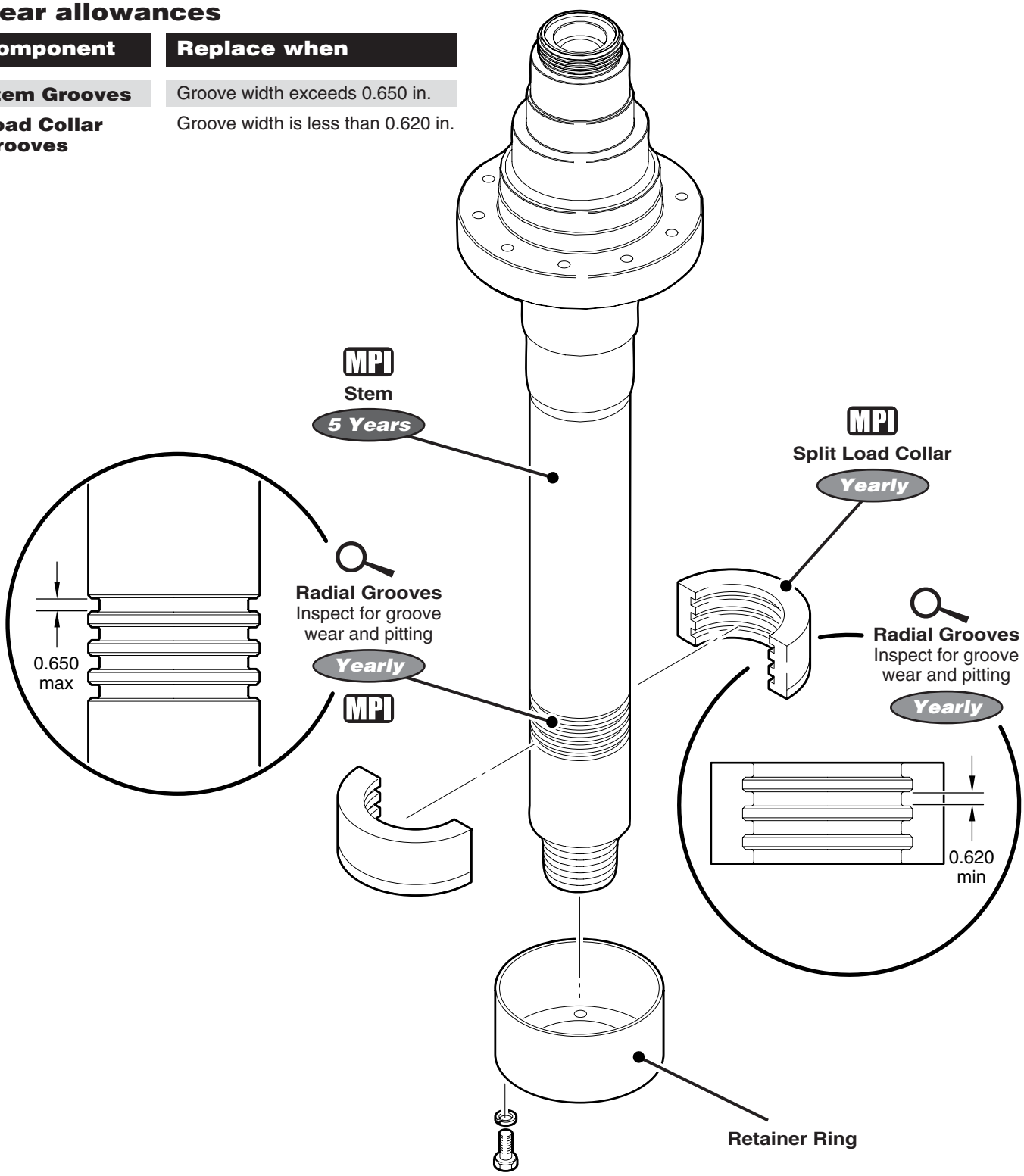

Mainshaft

Inspecting mainshaft end play

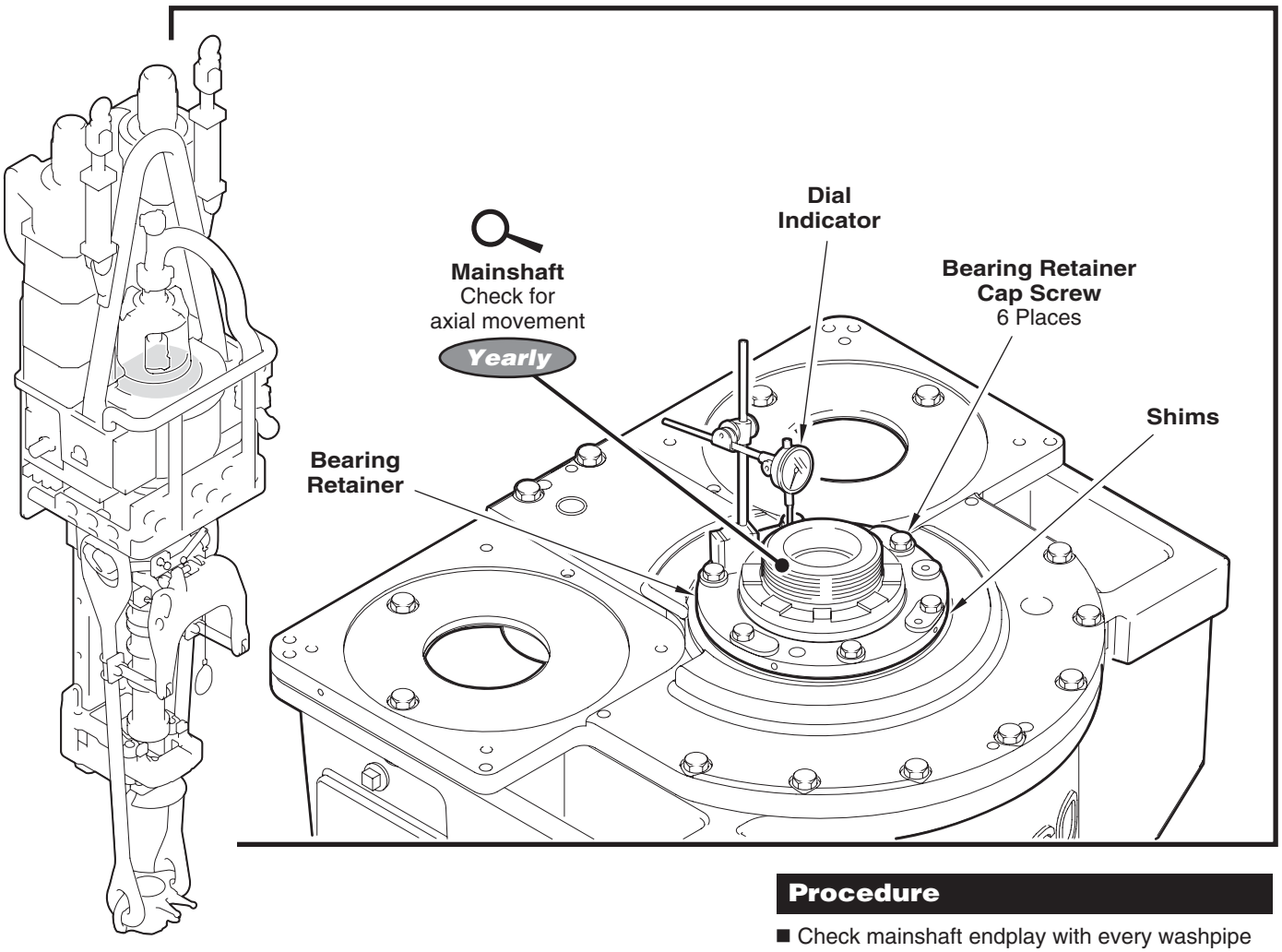

Procedure

- Check mainshaft endplay with every washpipe changeout
- Remove the washpipe assembly
- Check the mainshaft axial movement by applying an upward force to the mainshaft and measuring the amount of axial movement with a dial indicator
- If axial shaft movement is not .001 in. to .002 in., remove the bearing retainer and adjust the number of shims under the bearing retainer as required to allow .001 in. to .002 in. of axial

Inspecting the blower motor assemblies

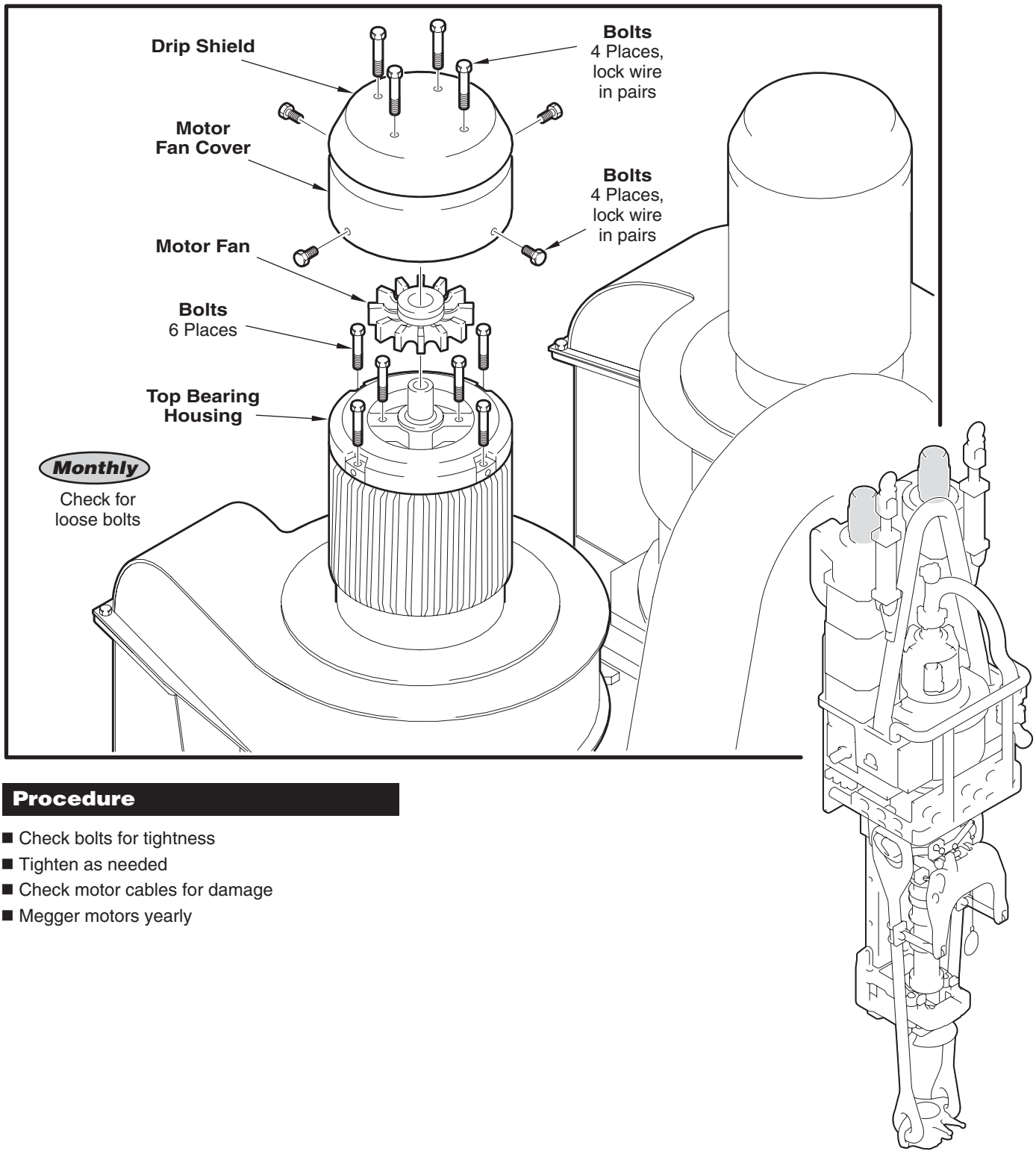

Procedure

- Check bolts for tightness
- Tighten as needed
- Check motor cables for damage
- Megger motors yearly

Inspecting the motor brakes

Procedure

- Remove the brake housing covers to access the drilling motor brakes
- Inspect the brake pads for wear, and replace the pads if worn below the allowable lining wear limit
- If the brake pads are wearing unevenly, adjust the pads by adjusting the bolts on the brake calipers to acheive an equal gap as descibed below

Never check for hydraulic leaks with your hands. Oil under pressure escaping from a hole can be nearly invisible and can penetrate skin causing serious injury. Always check for leaks with a piece of wood or cardboard.

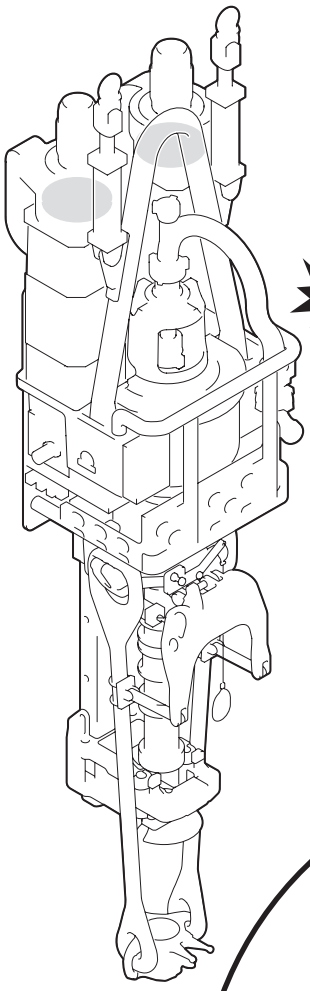

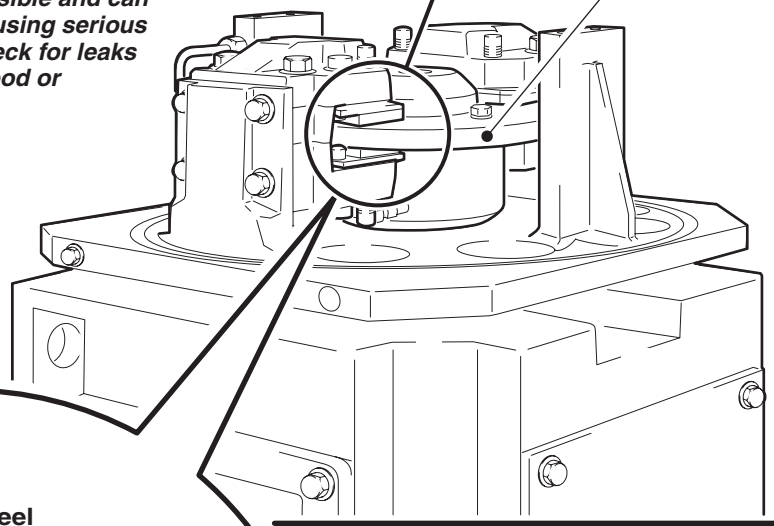

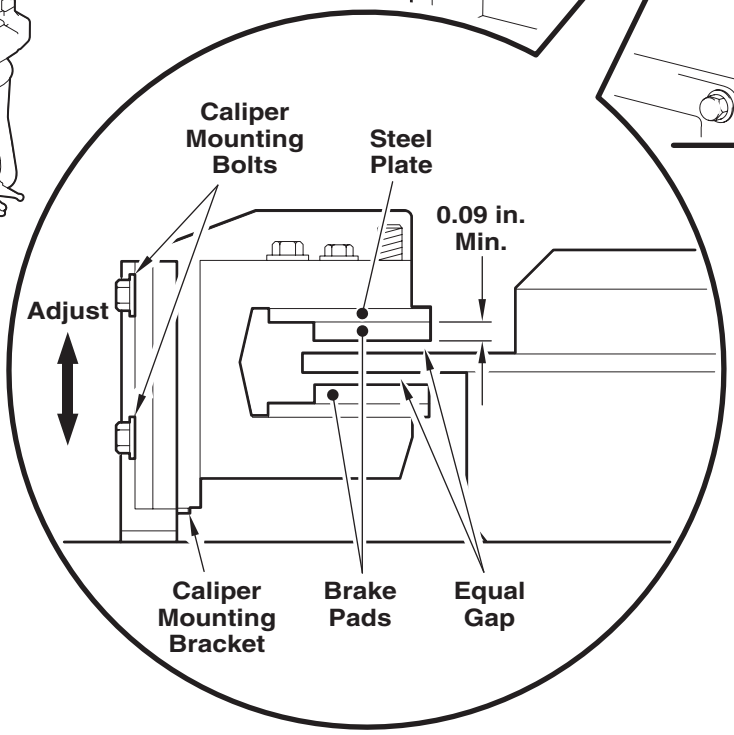

Inspecting the AC drilling motors

Procedure

- Check for missing or damaged louvers
- Check screens for contamination
- Check motor leads for damage
- Check for missing lockwire
- Megger motors yearly

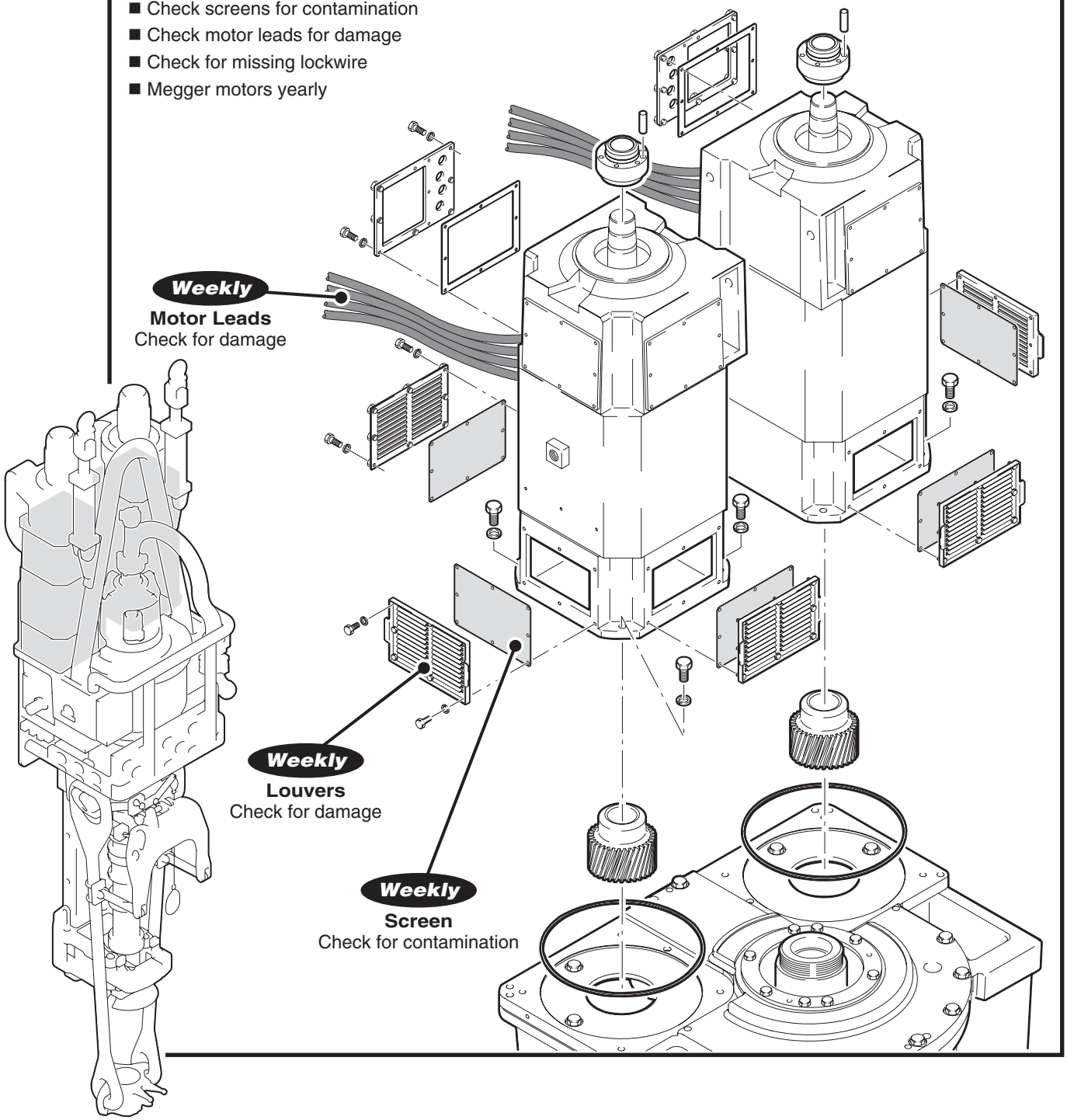

Disassembling/assembling the transmission

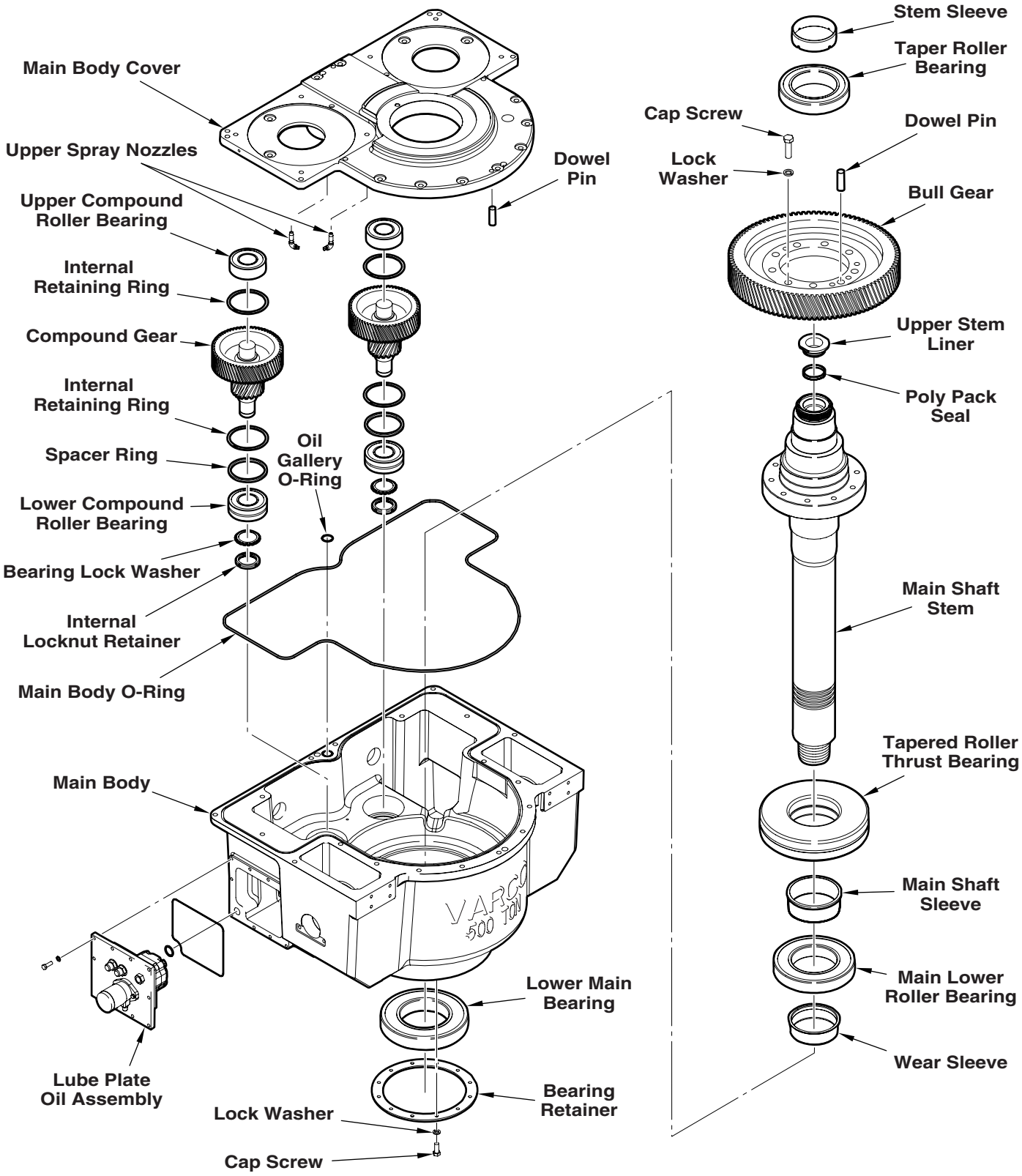

6

Performing nondestructive Examination (NDE)

Yearly (or after approximately 3,000 operating hours), perform a Nondestructive Examination (NDE) of all critical load path items.

NDE inspection includes visual examination, dye penetrant examination, magnetic particle inspection, ultrasonic inspection, x-ray examination, and other methods of nondestructive testing for metallurgical integrity.

Making visual inspections

Use calipers on a regular basis to measure the amount of wear on the elevator link eyes. Compare the measurements with the *Wear Chart* to determine the current strength of the elevator links. The capacity of the links equals the capacity of the weakest link.

Nondestructive Examination (NDE)

Performing Magnetic Particle Inspections (MPI)

Once a year, or every 3,000 operating hours, Varco recommends performing a Magnetic Particle Inspection (MPI) of the exposed surfaces of all load carrying components to reveal any fatigue or crack indications. Any indications found are a potential cause for replacing the suspect component. Round bottom pits and erosion are acceptable as long as the defect is less than 1/16 in. deep. Larger defects or any crack indications are cause for replacing the suspect component.

After approximately five years, or 15,000 operating hours, depending on the severity of operating conditions, Varco recommends performing a MPI of all load carrying components over their entire surface (including internal bores) to reveal any fatigue or crack indications. Any indications found are a potential cause for replacing the suspect component. Round bottom pits and erosion are acceptable as long as the defect is less than 1/16 in. deep. Larger defects or any crack indications are cause for replacing the suspect component. The load carrying components are:

- ❑ Mainshaft (lower portion)
- ❑ Bail
- ❑ Landing collar (yearly)
- ❑ Upper and lower IBOP
- ❑ Link adapter
- ❑ Saver, crossover, and spacer subs
- ❑ Power subs
- ❑ Power swivels
- ❑ Elevator links

Details on MPI procedures are in the following publications:

I.A.D.C.	*Drilling Manual, 9th Edition*
ASTM A-275	*Std. Method for Magnetic Particle Inspection of Steel Forgings*
ASTM E-709	*Std. Recommended Practice for Magnetic Particle Inspection*

Nondestructive Examination (NDE)

Perfoming Ultrasonic Inspections

In addition to the MPI, Varco also recommends performing an Ultrasonic Inspection of the above components to detect any erosion of the inside diameter. Any erosion reduces the load-carrying capability of the part. Any subsurface irregularity can also compromise a component's integrity.

Details on Ultrasonic Inspection procedures are in the publication:
ASTM A-388 *Std. Practice for Ultrasonic Examination of Heavy Steel Forgings.*

Inspecting the safety valves (IBOP)

Upper and lower IBOP valves, because of their internal grooves and shoulders, are particularly susceptible to corrosion fatigue cracking. These internal diameter changes act as stress risers for bending and tensile loads. It is especially important to properly inspect the IBOP valves on a frequent basis. Read and use the IBOP valve inspection procedures described in the *IBOP Service Manual* (SM00611).

PH-75 pipehandler illustrated index

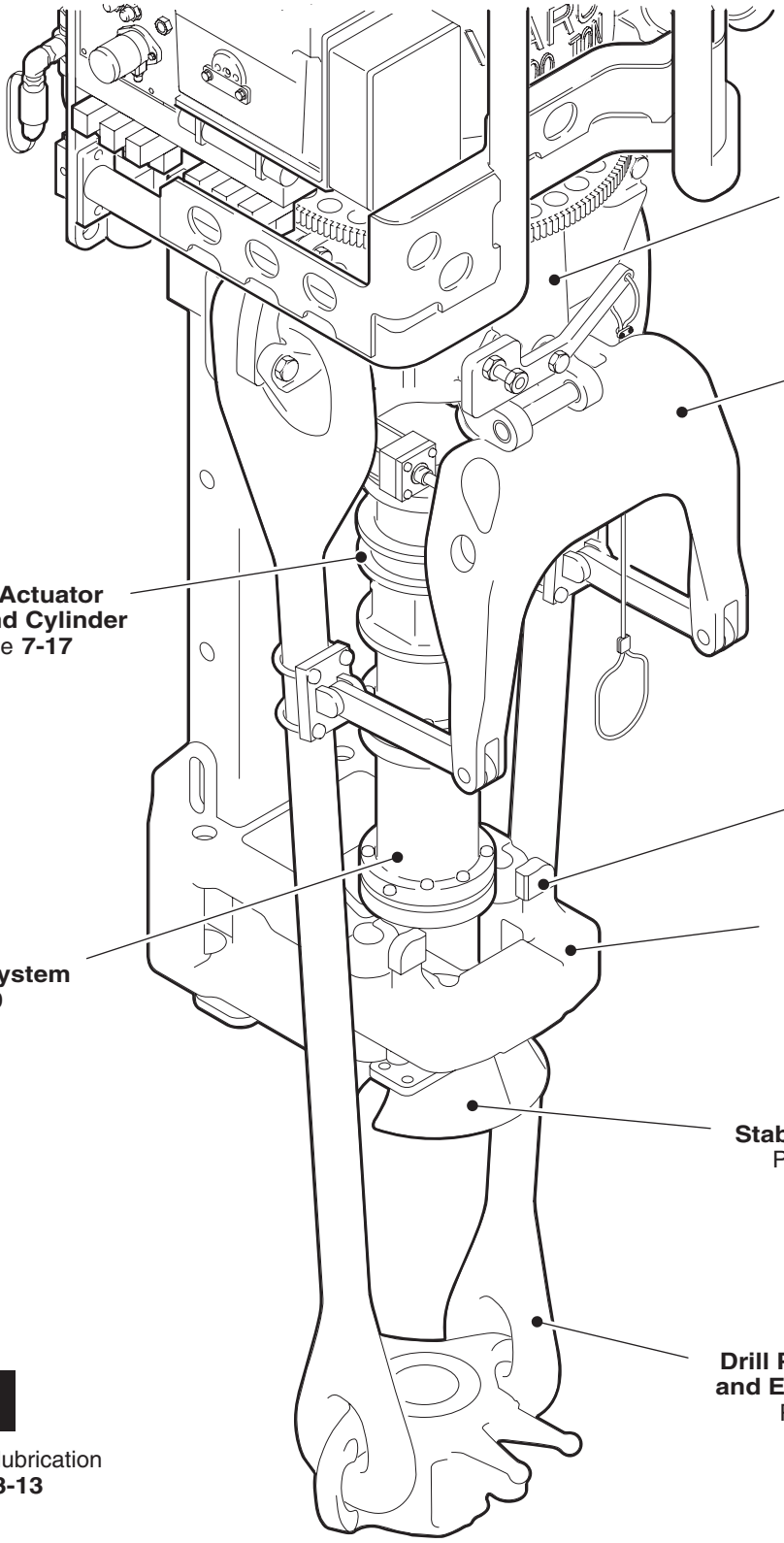

For pipehandler lubrication see Page **3-13**

PH-75 Inspection schedule

Daily	Page Reference
Check for missing lockwire and cotter pins	
Check for loose or broken parts and leaks	
Check for damaged hoses and fittings	
Check tong dies for wear	See page 7-14
Check clamp cylinder for leaks	See page 7-14
Check hoses for wear or damage	See page 7-17
Check tool joint locks for tightness	See page 7-20
Check upper and lower IBOP valves for proper operation	See page 7-21
Weekly	
Check link tilt clamps for position and tightness	See page 7-6
Check stabbing guide and flippers for damage and wear	See page 7-14
Check clamp cylinder gate hinge pin for wear	See page 7-14
Check IBOP actuator cylinder for leaks	See page 7-17
Check IBOP actuator cam followers for wear or excessive play	See page 7-19
Check upper and lower IBOPs and IBOP crank for damage (if equipped)	See page 7-21
Check shot pin assembly for leaks	See page 7-23
Monthly	
Check elevator link eyes for wear	See page 7-8
Check link tilt bushings for wear	See page 7-9
Check link tilt actuator cylinders for leaks	See page 7-9
Check link tilt actuator cylinder pins for wear	See page 7-9
Check clamp cylinder body wear bushings for wear	See page 7-14
Check stabilizer springs for damage	See page 7-16
Check front and rear stabilizers for wear	See page 7-16
Check pins and bushings on IBOP actuator cylinder and yoke for wear	See page 7-17
Check shot pin assembly for wear or damage	See page 7-23
Yearly	
Check piston ring for pitting and chipping	See page 7-25
Check stem for pitting, grooves and chipping	See page 7-25
Replace GLYD rings, o-rings and bushings on rotating link adapter	See page 7-25
5 Years	
MPI Inspection	See page 7-31

After inspecting above components, repair or replace as necessary.

Precautions

To avoid serious injury or death, read and understand the following warnings before performing inspection and maintenance procedures:

Properly lockout the main power source before performing lubrication, inspection, or replacement procedures, unless specifically noted in this manual.

Wear protective glasses to prevent eye injuries from fluids under pressure, as well as other hazards.

Do not attempt any adjustments while the machine is moving.

Use caution when draining lubricant. It can be hot.

Never check for hydraulic leaks with your hands. Oil under pressure escaping from a hole can be nearly invisible and can penetrate skin causing serious injury. Always check for leaks with a piece of wood or cardboard and always wear protective eyewear when working on hydraulic components.

Always discharge the three hydro pneumatic accumulators before performing repairs on the hydraulic system.

Do not attempt repairs you do not understand.

Read and understand all safety precautions and warnings before performing maintenance procedures.

Shutting Down the Top Drive

Use the following procedure before performing any work on the Top Drive.

- Operate the Link Tilt control on the VDC to the "FLOAT" position prior to shutting down the TDS.
- Make sure that the elevator links are hanging vertically.
- Turn the UIBOP valve control to the "OPEN" position on the VDC.
- Turn the main power "OFF" at the main power breaker in the VFD house.
- Turn the hydraulic control switch on the TDS hydraulic manifold (Figure 1) from "RUN" to "SHUTDOWN" mode.
- Attempt to function test the LINK TILT (Derrickman and Drilldown), the UIBOP, and pipehandler left and right rotation. If none of these functions operate, all hydraulic pressure is off.

Starting Up the Top Drive

Before turning the main power back on, be sure that all rig personnel are well clear of the TDS, pipehandler and all link tilt system components.

- Turn the hydraulic control switch on the TDS from the "SHUTDOWN" to the "RUN" mode.
- Turn the main power "ON" at the main power breaker in the VFD house. Reset brake. You may then function test the TDS after repairs have been made.

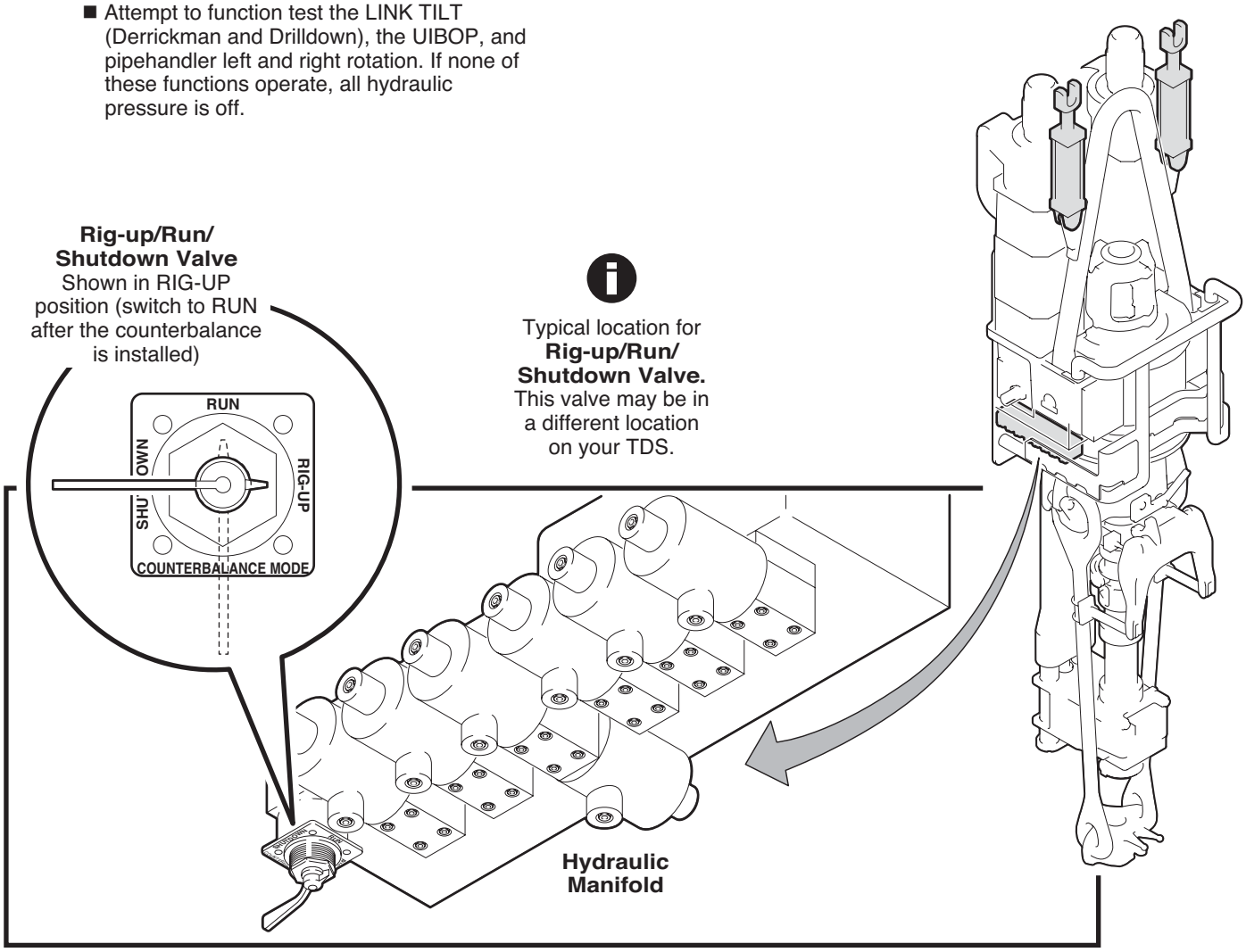

PH-75 Elevator links

Disassembling/Assembling the elevator links

1. Disconnect and remove the drill pipe elevator from the elevator links.
2. Using the Varco Driller's Console (VDC), rotate the pipehandler 90° to position one of the elevator links directly below the front of the motor guard.
3. Remove the catch link bolt from the catch link.
4. Remove the clevis pin from the link, which connects the link tilt to the elevator link.
5. Using the sling, hoist the elevator link away from the pipehandler.
6. Rotate the pipehandler 180°, repeat the procedure to remove the other elevator link.

Elevator links

Inspecting the elevator links

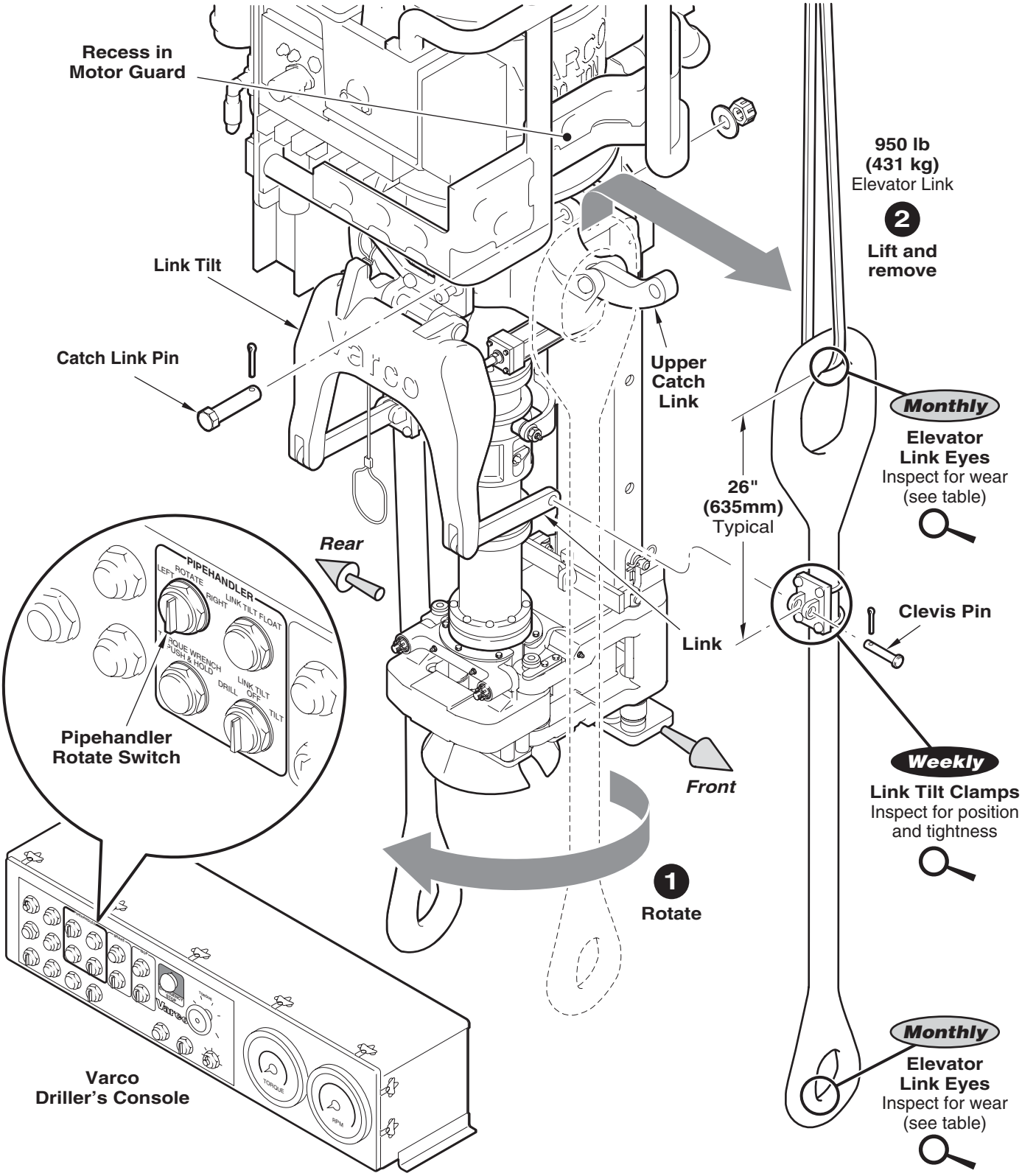

Elevator links

Inspecting the links (Varco links only)

Wear Chart - Forged Links

Upper Eye Dimension (C)	Lower Eye Dimension (A)	Capacity (per set) in Tons
B = 2 7/8 in., 250-Ton		
4 7/8 inches	2 3/16 inches	225
4 3/4 inches	2 1/16 inches	200
4 1/2 inches	2 inches	175
4 3/16 inches	1 7/8 inches	150
B = 3 1/2 in., 350-Ton		
5 inches	2 3/4 inches	350
4 13/16 inches	2 9/16 inches	300
4 5/8 inches	2 3/8 inches	225
7 7/16 inches	2 3/16 inches	175
B = 4 1/2 in., 500-Ton		
6 inches	3 1/2 inches	500
5 3/4 inches	3 1/4 inches	420
5 1/2 inches	3 inches	325
5 1/4 inches	2 3/4 inches	250
B = 6 1/4 in., 750-Ton		
7 1/2 inches	7 1/2 inches	750
7 1/4 inches	7 1/4 inches	725
7 inches	7 inches	700
6 3/4 inches	6 3/4 inches	650

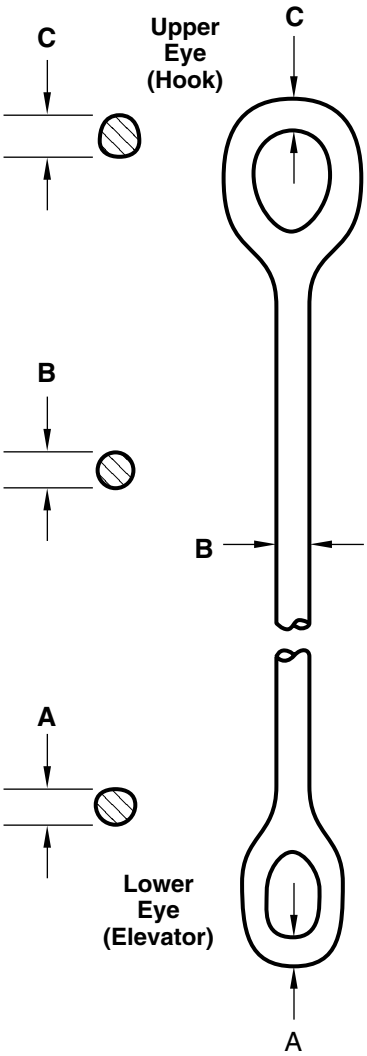

To determine the strength of worn links, measure (with calipers) the amount of eye wear and compare the measurements with the above Wear Chart to find the current capacity. The capacity of the set of links is determined by the weakest link.

PH-75 Link tilt

Disassembling/assembling the link tilt

1. Shutdown the power and bleed the system (turn the valve on the bottom of the gearcase to the SHUT DOWN position).
2. Disconnect the hydraulic lines from the link tilt cylinders and cap all connections.
3. Unpin and remove the link tilt cylinders.
4. Unpin and remove the link tilt crank.

Use the recommended spanner wrench to remove the rod gland seal.

Link tilt

Inspecting the link tilt

Wear allowances

Component	Replace when
Pins	**Wear exceeds .06 in. on diameter as measured by comparing worn surfaces to un-worn surfaces**
Bushings	**Metal backing is visible through the lining** **End cap of the metal backing exceeds .04 in. wear**

Bushings should be pressed in using the mating pin as an installation mandrel.

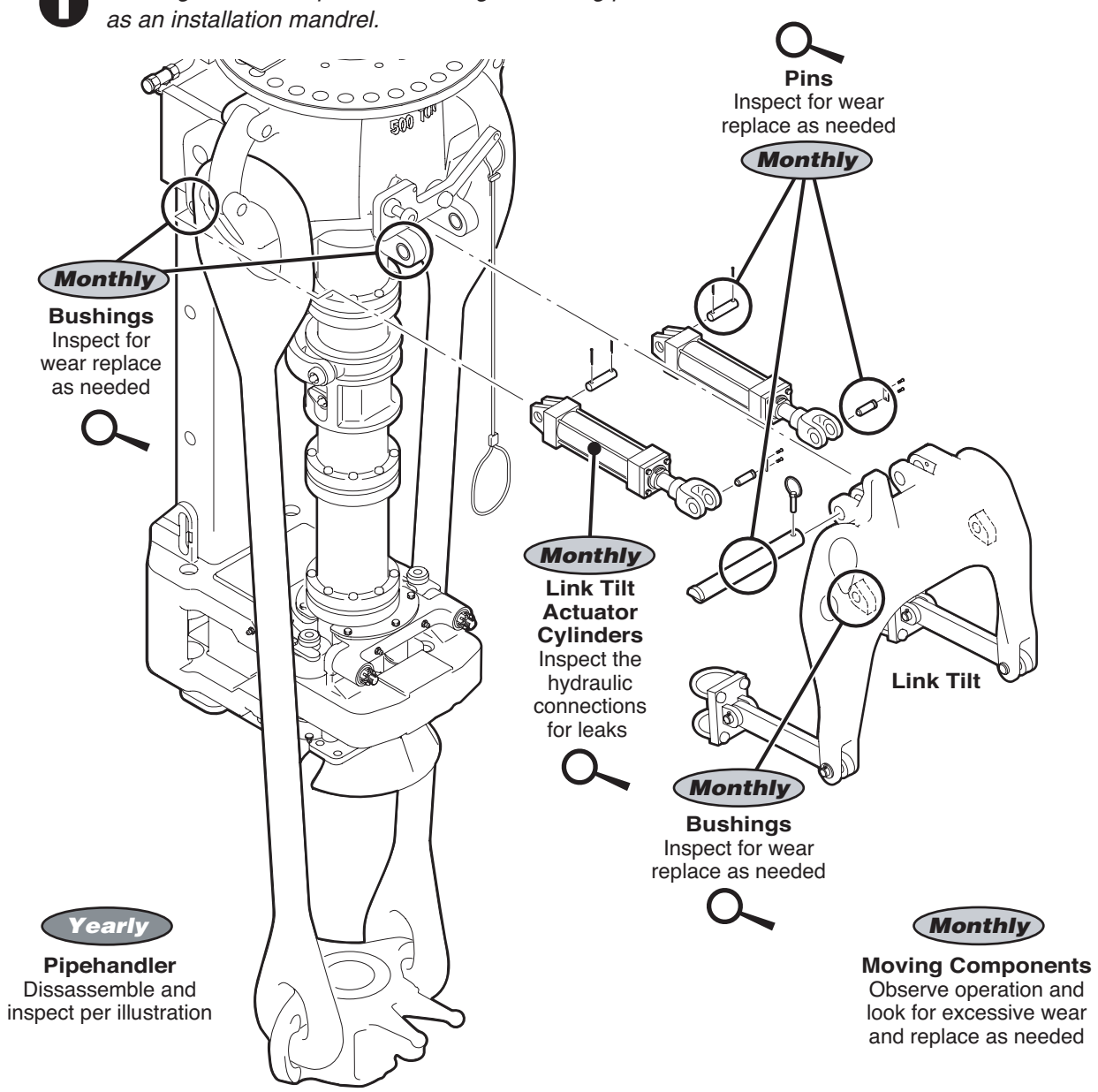

PH-75 Torque wrench assembly

Disassembling/assembling the clamp cylinder body

1. Shutdown power and bleed the system (turn the valve on the bottom of the gearcase to the SHUT DOWN position).
2. Disconnect the hydraulic lines on the clamp cylinder body and cap all connections.
3. Support the clamp cylinder body.
4. Remove the two hex-head capscrews and lockwashers that hold the end cap in place.
5. Remove the end cap, spring spacer, spring sleeve, and spring.
6. Slowly lower the clamp cylinder body off the torque wrench frame and move it to a suitable work area.
7. Remove the 16 hex-head screws and lockwashers that hold the wear bushings on the clamp cylinder body.
8. Remove the four wear bushings, and replace the wear bushings as necessary.
9. Remove the two hinge pin retainer hex-head screws.
10. Swing out the two hinge pin retainers.
11. Remove the two hinge pins.
12. Remove the gate, front jaw, front stabilizer, and front stabbing guide.
13. Remove the two socket-head capscrews and hi-collar washers from the front jaw.
14. Remove the front jaw from the gate.
15. Repeat steps 11 and 12 for the rear jaw.
16. Push the cylinder head in enough to relieve the load on the cylinder head ring. Remove the cylinder head ring. Use care in this operation.

Torque wrench assembly

17. Slowly pull out the cylinder head using the threaded holes. Remove and discard the piston seal.
18. Carefully push the piston out of the body. Remove and discard the piston seal.
19. Remove the wiper rod and rod seal from the body. Discard the seals.
20. Clean the piston, cylinder head, and the body. Clean and lightly lubricate the new seals and seal surfaces prior to reassembly.

Use recommended spanner wrench to remove the rod gland seal.

Assembly is performed in reverse order of disassembly.

Torque wrench assembly

Removing the clamp cylinder body

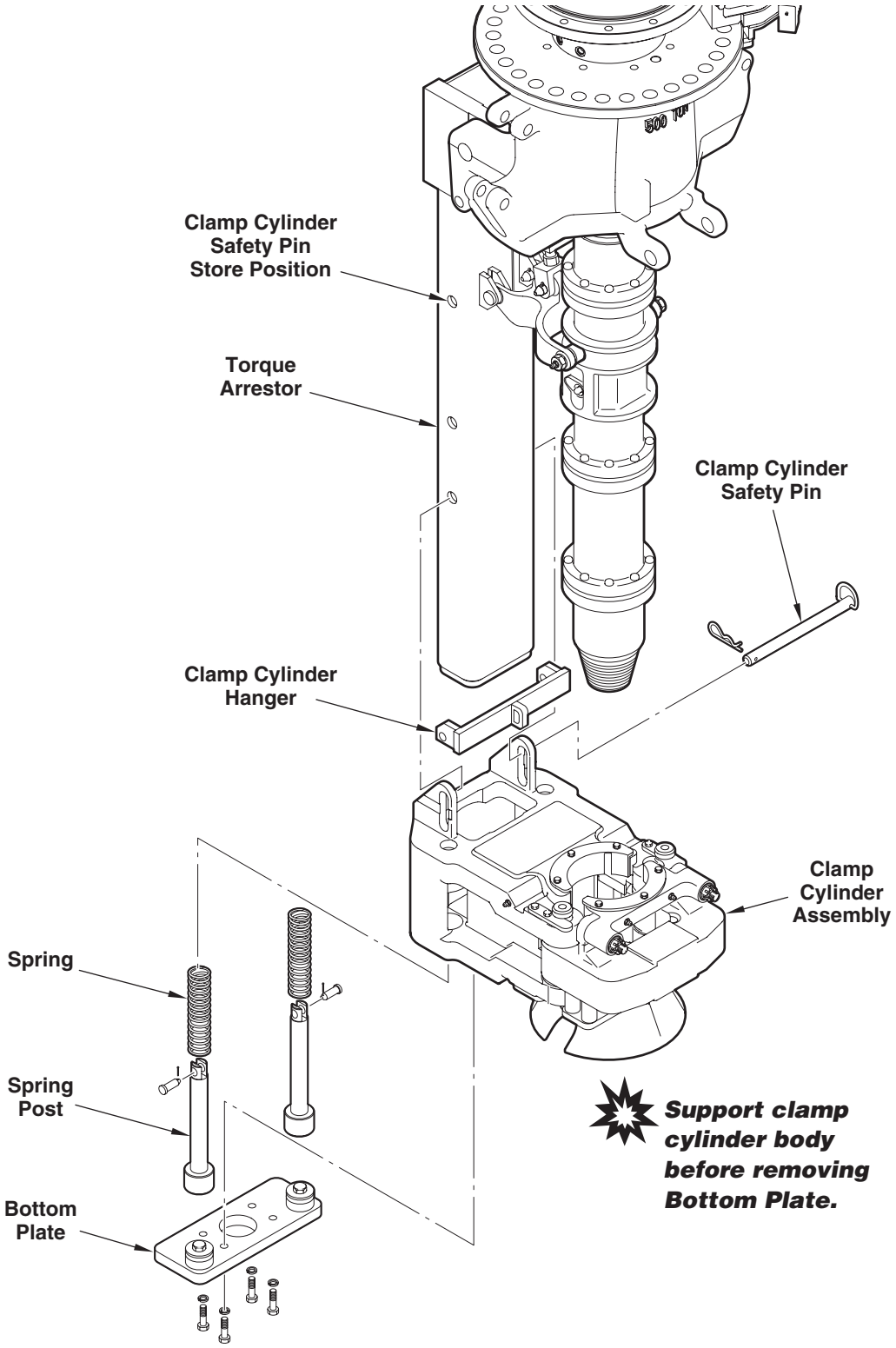

Torque wrench assembly

Disassembling/assembling the clamp cylinder body

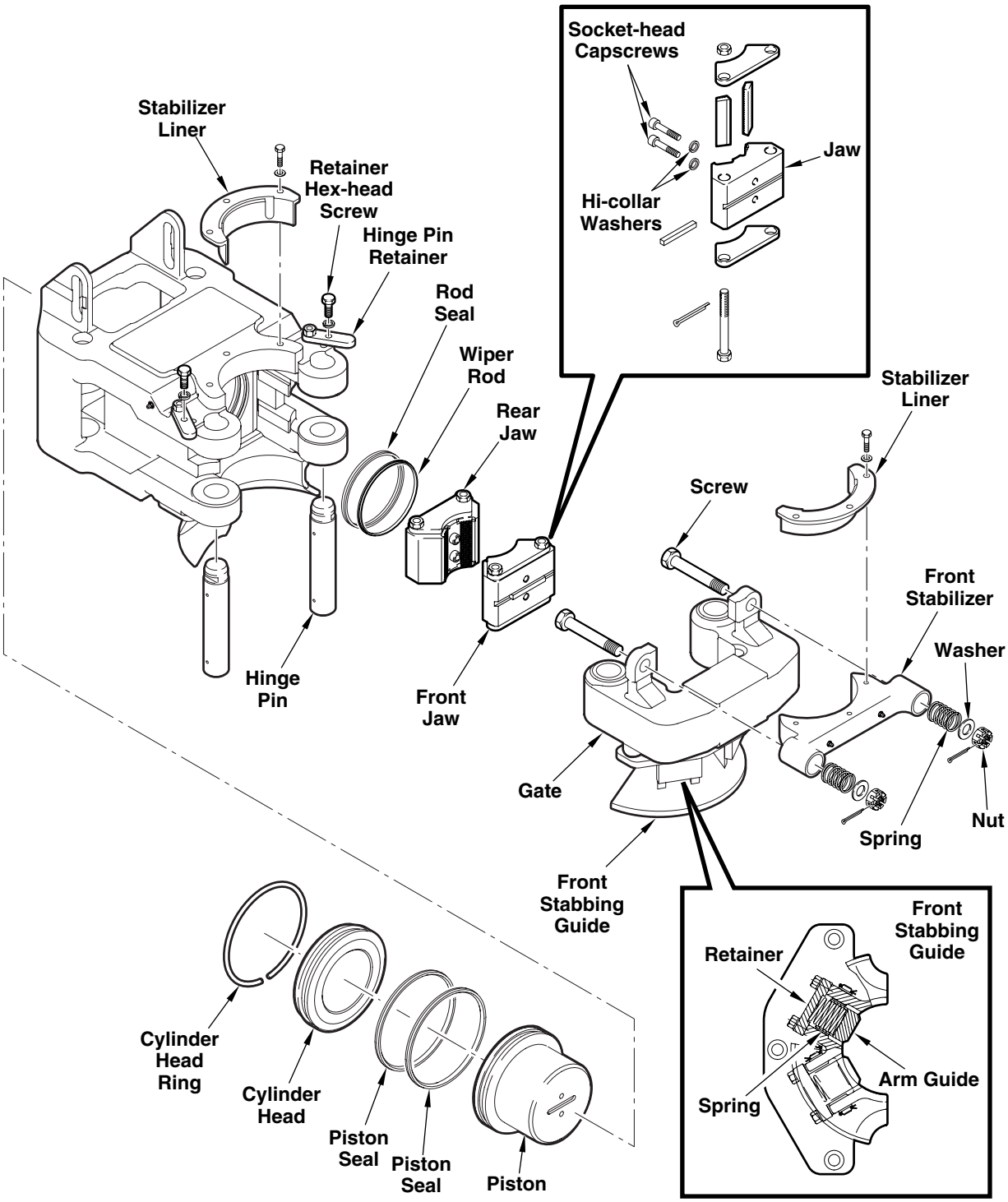

Torque wrench assembly

Inspecting the clamp cylinder body

Wear allowances

Component	Replace when
Stabilizer	Wear exceeds 1/8 in. (radius >3.625")
Flippers	Wear exceeds 1/8 in. (radius >3.625")
Gate Hinge Pins	Wear exceeds .06 in.

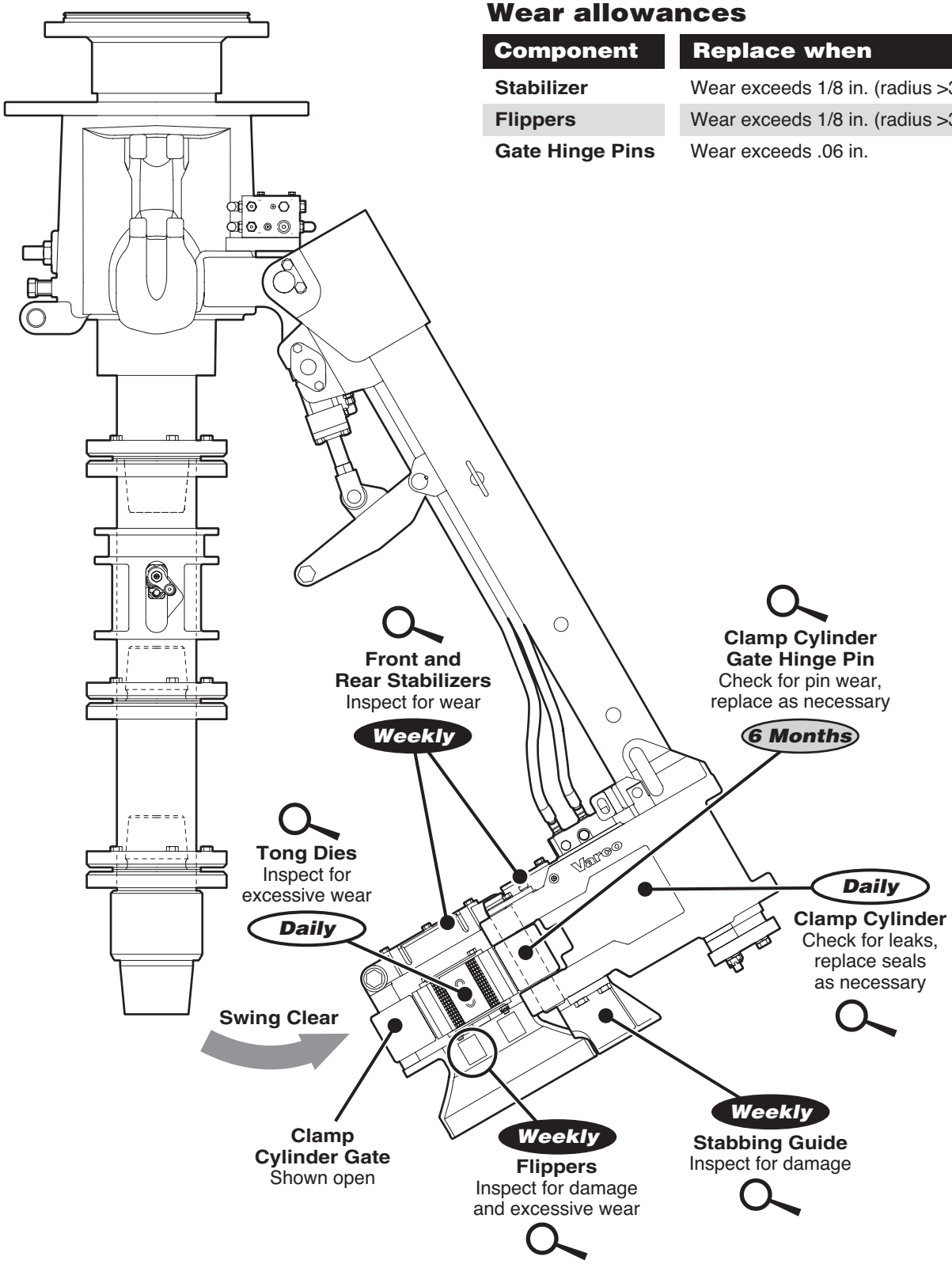

Torque wrench assembly

Inspecting the stabilizer

Procedure

- Remove the two screws (with slotted nuts and cotter pins) that hold the front stabilizer
- Check the springs for damage and replace if needed
- Pack spring cavities with grease and reassemble
- Be sure all safety wire, cotter pins, and screws are tight, and tighten or replace as necessary.

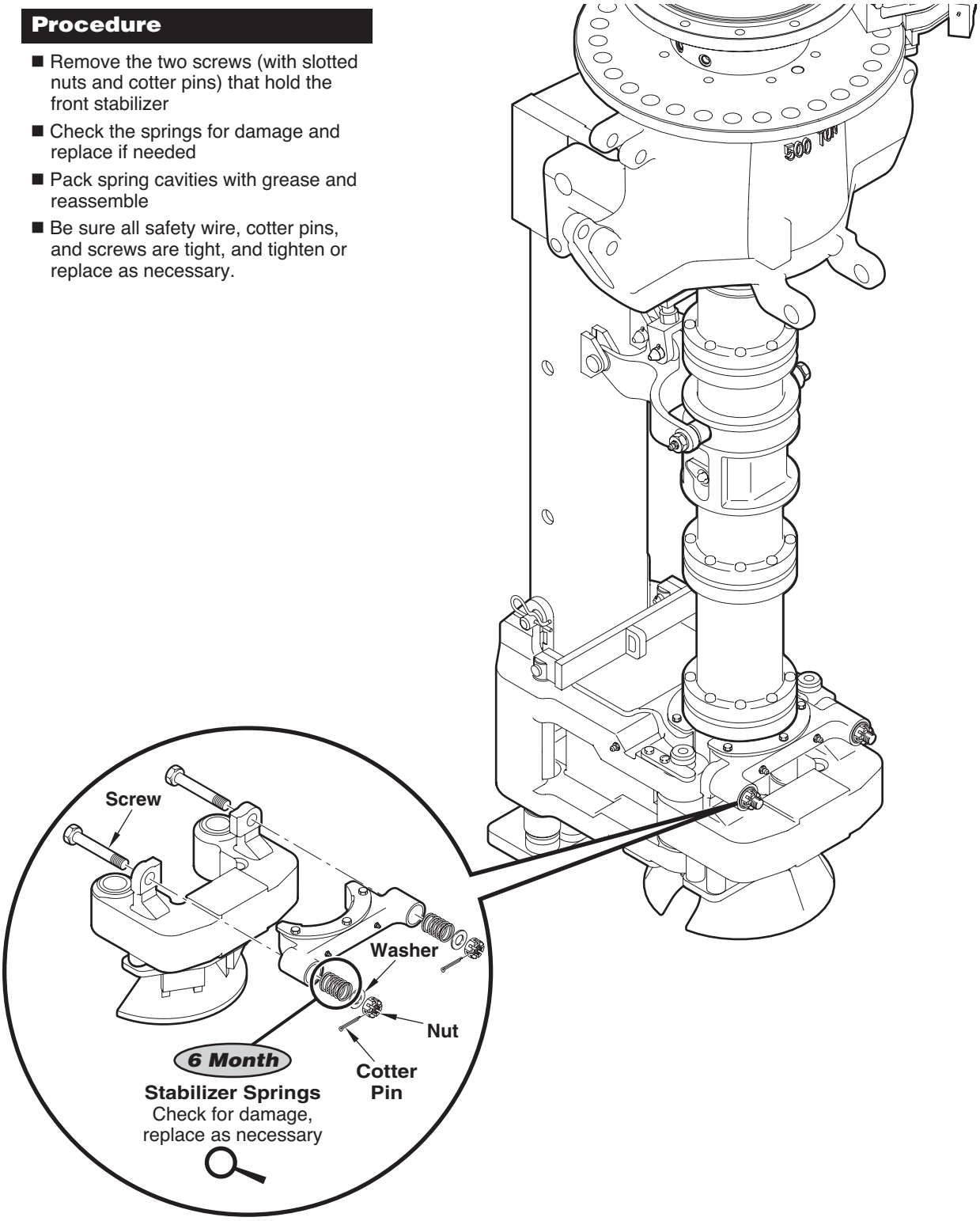

Torque wrench assembly

Inspecting the IBOP actuator cylinder and yoke

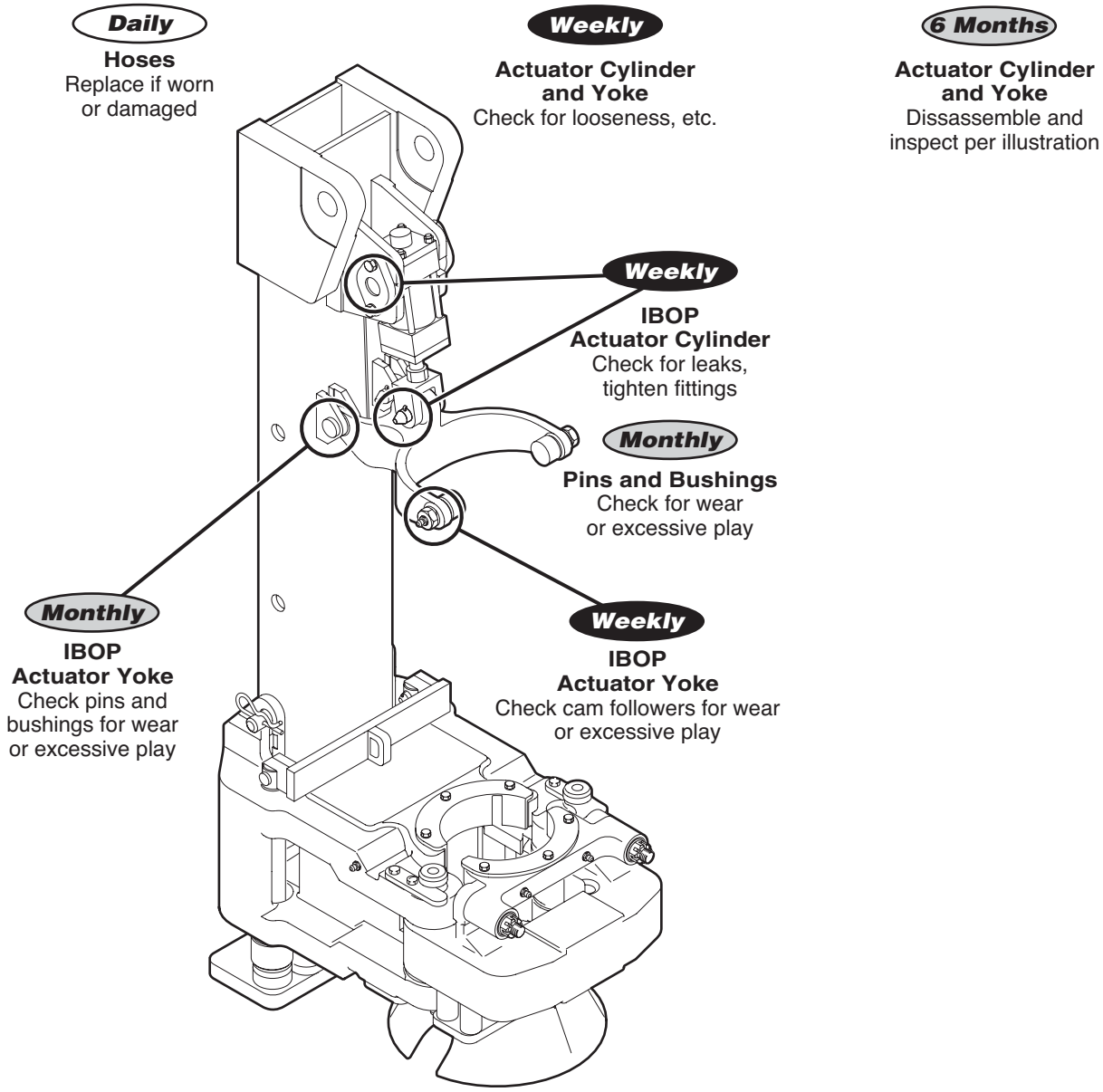

Wear allowances

Component	Replace when
Pins	Wear exceeds .06 in. on diameter
Bushings	Metal backing is visible through the lining
	End cap of the metal backing exceeds .04 in. wear

Bushings should be pressed in using the mating pin as an installation mandrel

Torque wrench assembly

Inspecting the IBOP actuator cylinder and yoke

Disassembling the IBOP actuator cylinder and yoke

1. Shutdown the power and bleed the system (turn the valve on the bottom of the gearcase to the SHUT DOWN position).
2. Remove one gate hinge pin, open the gate, and pull back the torque wrench assembly.
3. Disconnect the hydraulic lines from the IBOP actuator cylinder and cap all connections.
4. Unpin and remove the IBOP actuator cylinder and yoke.
5. Replace the hydraulic lines as necessary.
6. Check for cylinder leaks.

PH-75 Well control system

Assembling/disassembling the tool joint locks

Do not reuse locking screws.

1. Lubricate the locking screw threads, screw head bearing area, and the tapers of the inner rings with molybdenum disulfide grease, such as Molykote Gn paste.
2. Make sure the save sub, IBOPs, and main shaft are free of “high spots”, such as tong marks. If high spots exist, remove with file or light grinding.
3. Slide the tool joint lock over the main shaft, IBOP valves, and saver sub.
4. Clean the IBOP valves, main shaft, and saver sub surfaces thoroughly. Make sure these surfaces are smooth and free of grease, oil, and pipe dope.
5. Locate the tool joint lock symmetrically at each joint.

Never tighten locking screws before the tool joint lock is at the correct location, otherwise it will not slide freely.

6. Take any three or four locking screws equally spaced and tighten them to establish parallel or perpendicular position of the tool joint lock collars relative to the main shaft, IBOP valves, and saver sub respectively. This properly seats the collars on the taper of the inner ring and aligns the collars.
7. Using a torque wrench, tighten all locking screws gradually in either a clockwise or counterclockwise sequence (not in a diametrically opposite sequence). Continue tightening all of the screws until they reach 185±5 ft lb.
8. Make sure no screw turns any more. The gap between the tool joint collars should be as equal as possible all the way around.
9. Safety wire all screws.

Well control system

Inspecting the tool joint locks

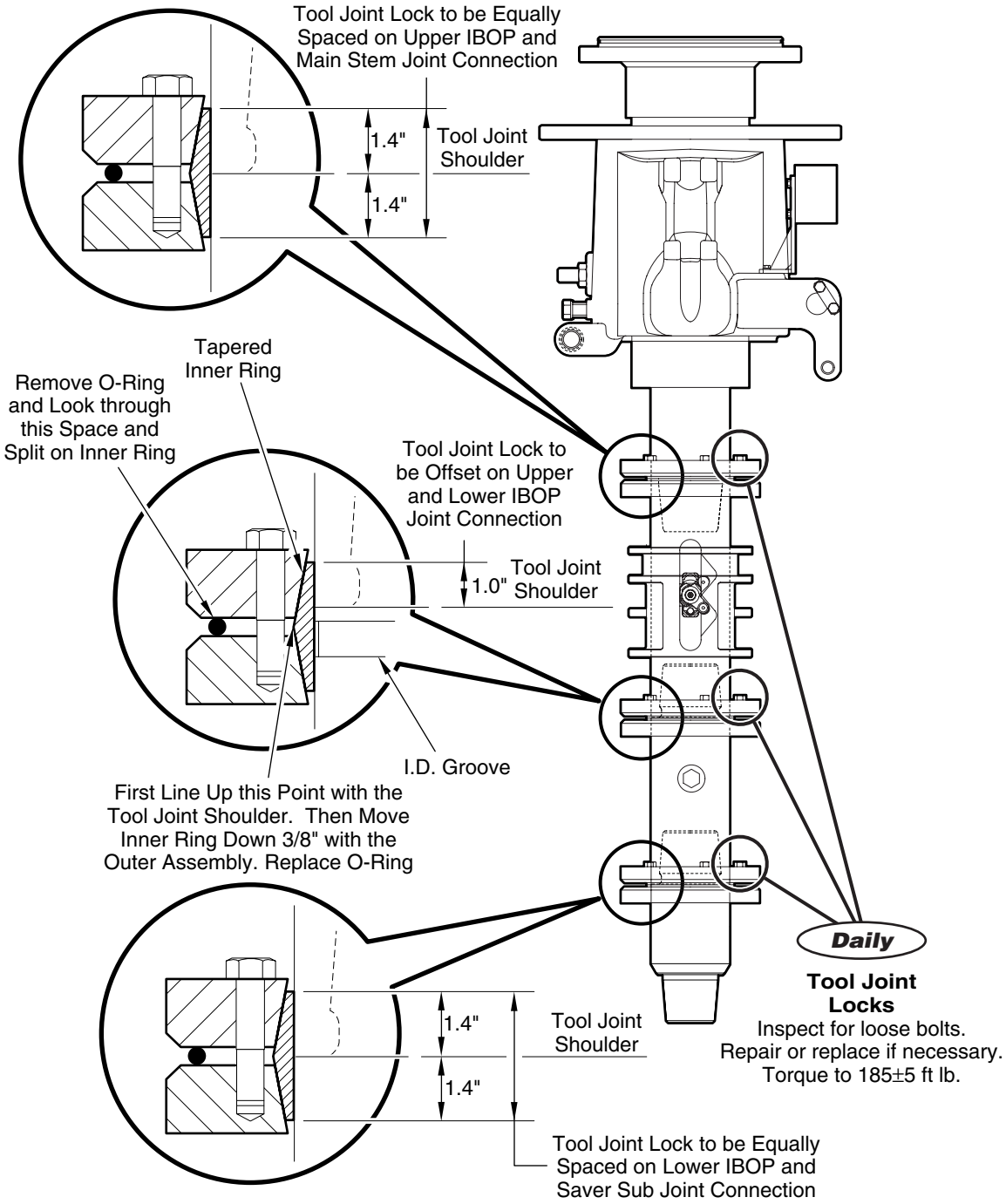

Daily

Tool Joint Locks
Inspect for loose bolts.
Repair or replace if necessary.
Torque to 185±5 ft lb.

Removing the Tool Joint Locks

- Gradually release the locking screws all the way around. Initially release each screw about a quarter of a turn, avoid tilting and jamming the collars. Do not remove the screws completely at this time, otherwise the collars may spring off.
- Remove any rust formed or dirt collected adjacent to the tool joint lock. Once the screws are loose, remove the tool joint lock from the saver sub, IBOP valves, and main shaft.

Well control system

Inspecting the IBOP valves and saver subs

Wear allowances

Component	Replace when
Saver Sub	Threads have been recut to a minimum shoulder-to-shoulder length of 5 in.

See the IBOP Service Manual for IBOP disassembly/assembly and servicing information.

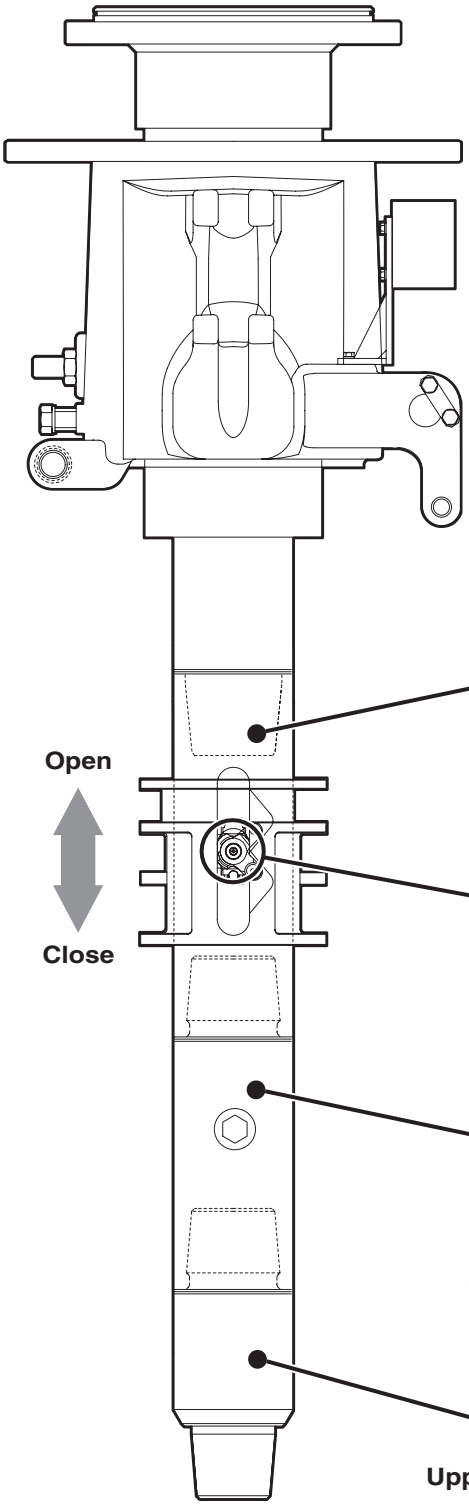

Weekly
Upper IBOP
(Remote)
Inspect for damage

Daily
Valve
Check for proper operation and **pressure test** for leaks

Weekly
IBOP Crank
(Remote)
Inspect for damage

Weekly
Lower IBOP
(Manual)
(Optional)
Inspect for damage

Daily
Valve
Check for proper operation and **pressure test** for leaks

5 Years
Upper and Lower IBOP
MPI

PH-75 Shot pin assembly

Disassembling/assembling the shot pin assembly

1. Disconnect the hydraulic and electrical lines.
2. Remove the capscrews that attach the shot pin assembly to the main body.
3. Remove the capscrew and lockwasher holding the shot pin cover in place
4. Remove the shot pin components as shown in the illustration on Page 7-23 (end cap, o-rings, rod seal assembly, shot pin)
5. Inspect the shot pin bearing and press the bearing out of the shot pin mounting bracket if the bearing is scored or damaged.
6. Remove the capscrew and lockwasher that hold the pinion gear in place, and remove the gear.
7. Remove the capscrews and lockwashers that hold the hydraulic motor in place and remove the motor.

Inspect the disassemble parts and replace any worn or damaged parts. Assemble the shot pin in the reverse order of disassembly.

Shot pin assembly

Inspecting the shot pin assembly

Wear allowances

Component	Replace when
Shot Pin	Outer diameter is less than 1.375 in.
Shot Pin Sleeve	Inner diameter is greater than 1.510 in.

Weekly

Shot Pin Assembly
Check for leaks, tighten fittings

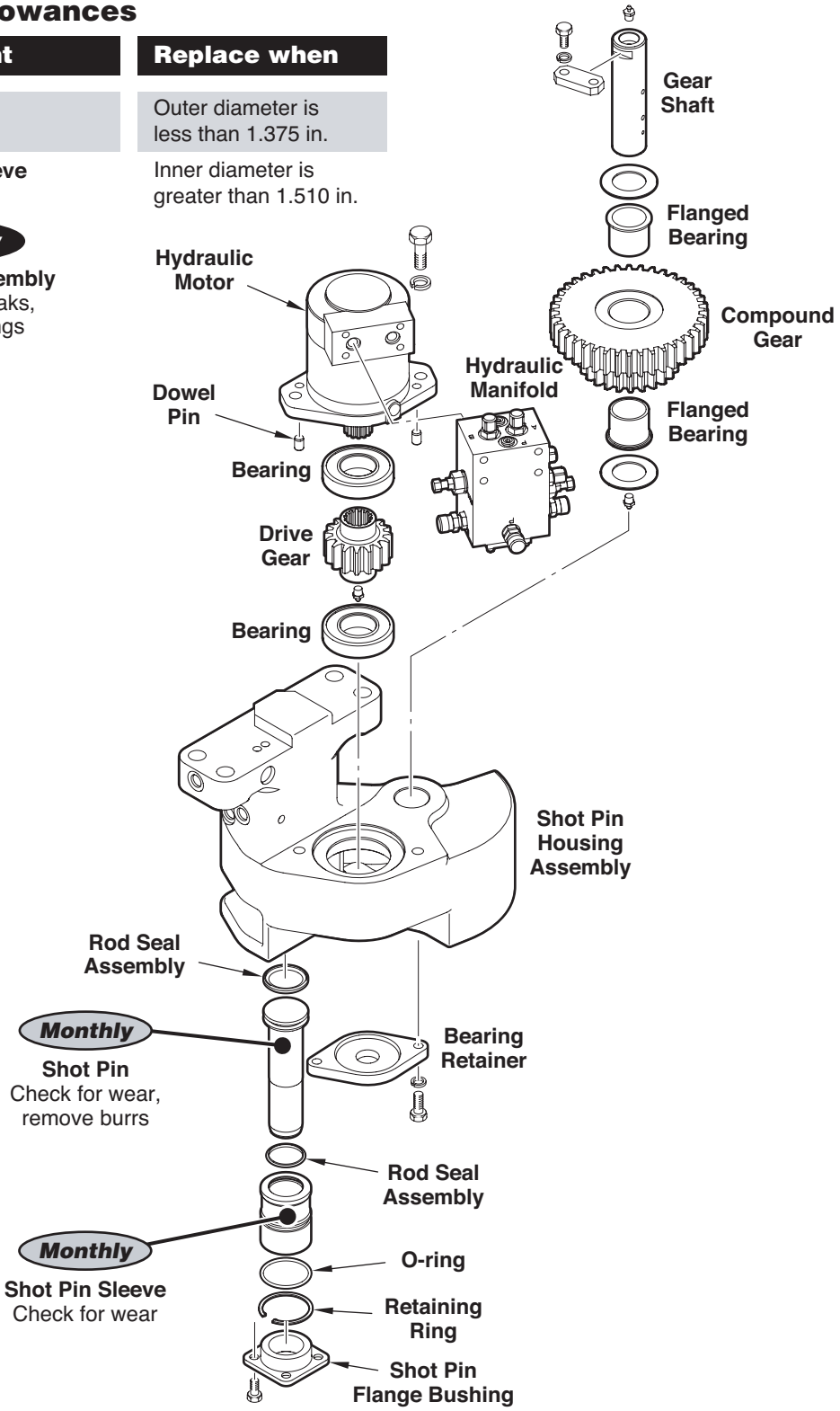

PH-75 Rotating link adapter/load stem

Removing the pipehandler and link tilt from the top drive (while in mast)

1. Drain the oil from the gearbox.
2. Disconnect and cap all tubing, remove the shot pin assembly and the landing collar.
3. Build a support over well center to support the weight of the link adapter.
4. Lower the top drive to the support built in Step 3.
5. Remove the bolts that attach the load stem to the main body.
6. Raise the top drive slowly to separate the link adapter from the main body.
7. Move the link adapter assembly to a clean, safe work area.
8. Orient the assembly with the stem flange up and block the entire assembly so that it is secure in this position.

Disassembling the link tilt assembly

1. Attach a 3-point sling to the stem and pull the stem out of the link adapter.
2. Turn the stem over and place it on its flange.

Protect the internal surfaces of the rotating link adapter and the surfaces of the drive stem when separating the two components. When removing the rotating link adapter from the stem, carefully tap with a mallet. There can be misalignment between the two bores when raising the drive stem and gear assembly.

The piston ring is assembled with a light press fit. Provide a support under the gear so that it does not drop when it breaks loose.

3. Remove and discard all rotary seals, O-rings, thrust ring, and the wear bushings from inside the rotating link adapter and gear inside dimension.
4. Remove and discard the stem flange O-rings and stem bore shaft seals.

Rotating link adapter/load stem

Inspecting the rotating link adapter

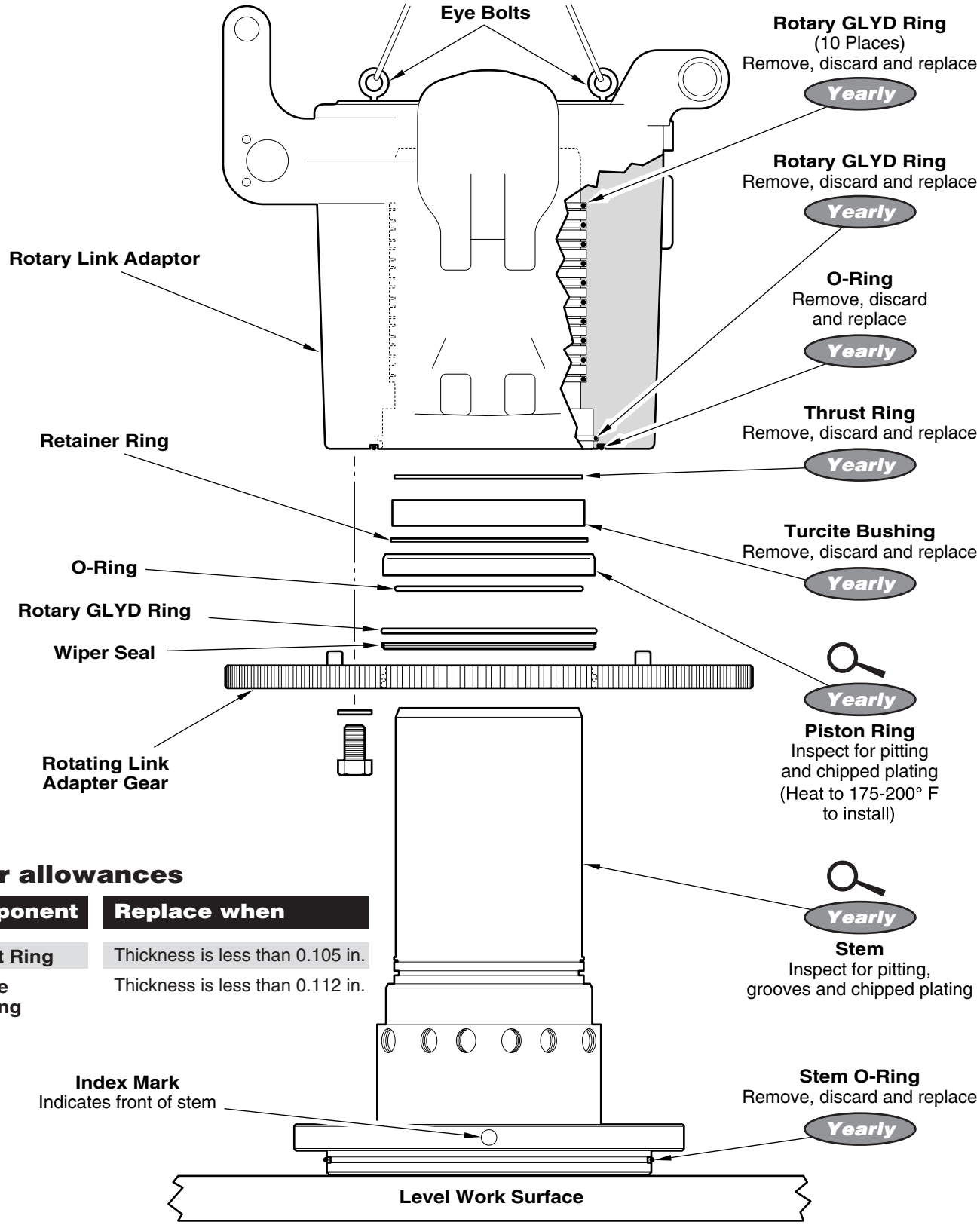

Wear allowances

Component	Replace when
Thrust Ring	Thickness is less than 0.105 in.
Turcite Bushing	Thickness is less than 0.112 in.

7

Rotating link adapter/load stem

Assembling the link adapter

1. Orient the stem so the drive stem flange is down on a suitably protected surface.
2. Install the gear with its rotating seal and wiper in place.
3. Install the O-ring for the piston ring.
4. Install the piston ring by tapping on it lightly with a mallet to press it into place (Heat to 220-250°)
5. Install the retainer ring.
6. Install all of the rotary seals on the rotating link adapter, and an O-ring on the top surface.
7. Install the two wear bushings and the thrust ring in the rotating link adapter.
8. Rest the rotating link adapter on its bottom surface.
9. Clean and then lubricate (with hydraulic oil) the sealing surface of the stem and the inside diameter of the rotating link adapter.
10. Attach three lifting slings symmetrically through the holes on the top of the stem flange and slowly lower the assembly into the rotating link adapter body. Hammering with a large plastic mallet is an aid when assembing the stem to the link adapter.

Make sure the seals do not twist in the grooves.

11. Install the gear onto the link adapter and install the bolts.
12. Pressure test each port at 1,000 psi and inspect for leaks at the adjacent ports.
13. Grease all lubrication points on the assembly.
14. Inspect the lower gearbox seal (located inside the stem flange), and replace as necessary.

Rotating link adapter/load stem

Assembling the link adapter to the top drive (while in mast)

1. Check the condition of the manshaft wear ring and replace if there is any evidence of grooving.
2. Place the rotating link adapter assembly back on the support built over well center, orienting the assembly so that the stem flange is up, and so that the idex mark faces forward.
3. Carefully lower the top drive to engage the mainshaft in the stem bore and then the stem flange pilot diameter is in the main body bore.
4. Install the flange bolts.
5. Install the link tilt cylinders, pin, and secure in place.
6. Install the link tilt crank and pin, and secure in place.
7 Install all hose assemblies.
8. Install tubing.
9. Install the shot pin assembly.
10. Fill the gearcase with gear oil (see *Lubrication*).
11. Check and fill the hydraulic oil as necessary.
12. Turn on the top drive and perform all pipehandler functions several times, checking for proper function and any leaks.
13. Re-check the hydraulic oil level and fill as necessary.

Always install a new mainshaft seal and use care not to damage the seal or the case.

A light coating of grease applied to the O-ring helps in installing the rotating link adapter assembly into the main body.

Always install a new drive stem O-ring and use care not to damage the O-ring or the case.

Performing nondestructive examination (NDE)

Yearly (or after approximately 3,000 operating hours), perform a Nondestructive Examination (NDE) of all critical load path items.

NDE inspection includes visual examination, dye penetrant examination, magnetic particle inspection, ultrasonic inspection, x-ray examination, and other methods of nondestructive testing for metallurgical integrity.

Nondestructive Examination (NDE)

Performing magnetic particle inspections (MPI)

Once a year, or every 3,000 operating hours, Varco recommends performing a Magnetic Particle Inspection (MPI) of the exposed surfaces of all load carrying components to reveal any fatigue or crack indications. Any indications found are a potential cause for replacing the suspect component. Round bottom pits and erosion are acceptable as long as the defect is less than 1/16 in. deep. Larger defects or any crack indications are cause for replacing the suspect component.

After approximately five years, or 15,000 operating hours, depending on the severity of operating conditions, Varco recommends performing a MPI of all load carrying components over their entire surface (including internal bores) to reveal any fatigue or crack indications. Any indications found are a potential cause for replacing the suspect component. Round bottom pits and erosion are acceptable as long as the defect is less than 1/16 in. deep. Larger defects or any crack indications are cause for replacing the suspect component. The load carrying components are:

- ❑ Mainshaft (lower portion)
- ❑ Bail
- ❑ Landing collar (yearly)
- ❑ Upper and lower IBOP
- ❑ Link adapter
- ❑ Saver, crossover, and spacer subs
- ❑ Power subs
- ❑ Power swivels
- ❑ Elevator links

Details on MPI procedures are in the following publications:

I.A.D.C.	*Drilling Manual, 9th Edition*
ASTM A-275	*Std. Method for Magnetic Particle Inspection of Steel Forgings*
ASTM E-709	*Std. Recommended Practice for Magnetic Particle Inspection*

Nondestructive Examination (NDE)

Performing ultrasonic inspection

In addition to the MPI, Varco also recommends performing an Ultrasonic Inspection of the above components to detect any erosion of the inside diameter. Any erosion reduces the load-carrying capability of the part. Any subsurface irregularity can also compromise a component's integrity.

Details on Ultrasonic Inspection procedures are in the publication: ASTM A-388 *Std. Practice for Ultrasonic Examination of Heavy Steel Forgings.*

Inspecting the safety valves (IBOP)

Upper and lower IBOP valves, because of their internal grooves and shoulders, are particularly susceptible to corrosion fatigue cracking. These internal diameter changes act as stress risers for bending and tensile loads. It is especially important to properly inspect the IBOP valves on a frequent basis. Read and use the IBOP valve inspection procedures described in the *IBOP Service Manual* (SM00611).

PH-50 Pipehandler illustrated index

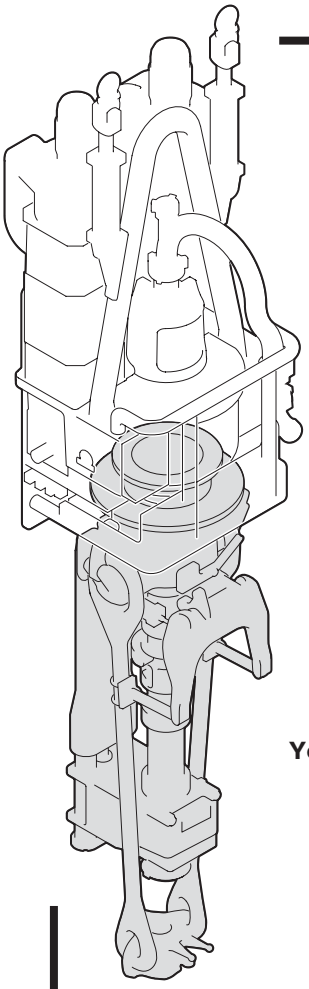

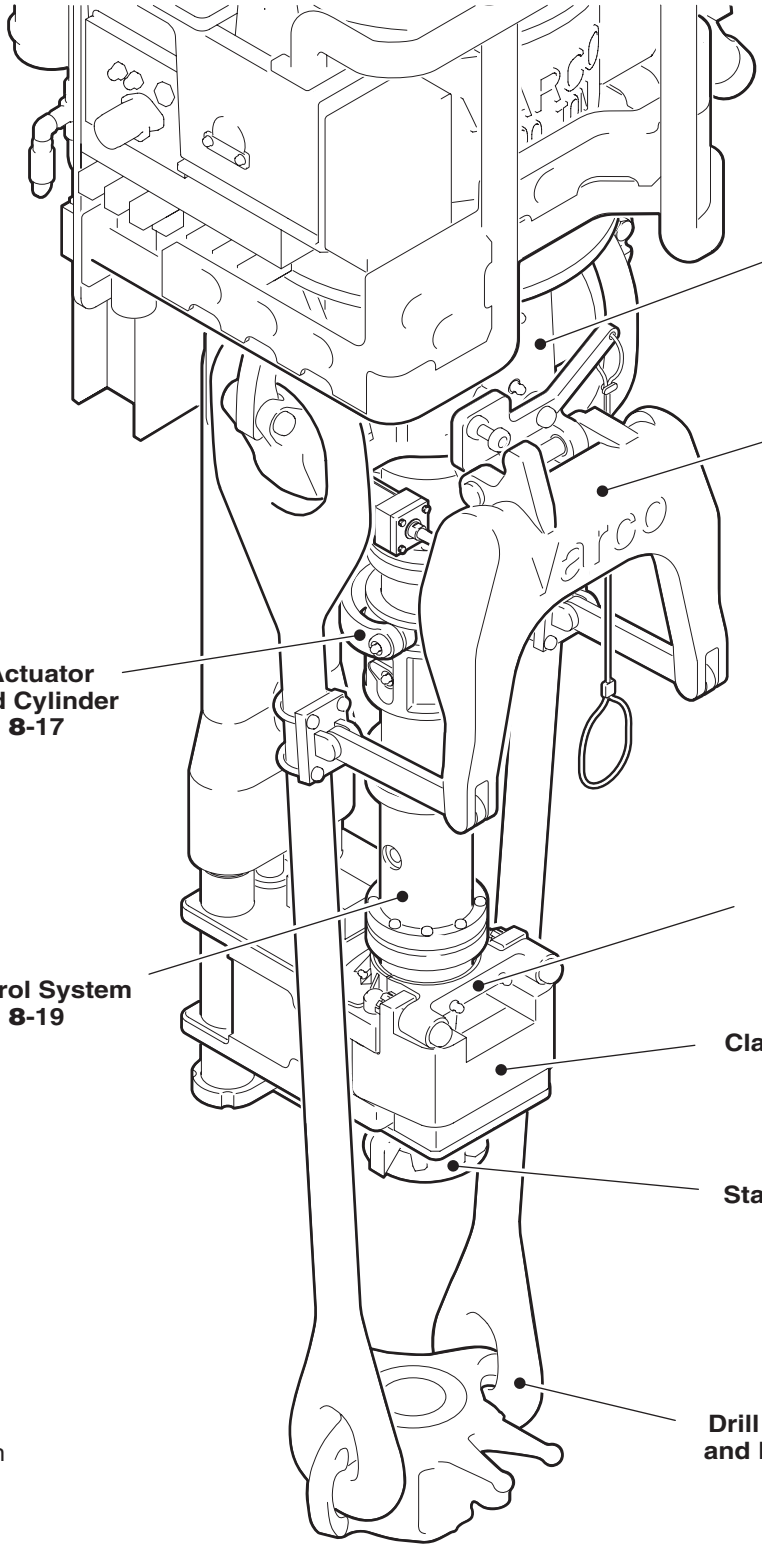

Rotating Link Adapter
Page **8-24**

Link Tilt
Page **8-8**

IBOP Actuator Yoke and Cylinder
Page **8-17**

Stabilizer
Page **8-15**

Well Control System
Page **8-19**

Clamp Cylinder Body
Page **8-10**

Stabbing Guide
Page **8-13**

Drill Pipe Elevator and Elevator Links
Page **8-5**

For pipehandler lubrication
see Page **3-13**

Inspection schedule

Each Use	Page Reference
Check wireline adapter sheaves for excessive wear or damage	See page 8-28
Daily	
Check for missing lockwire and cotter pins	
Check for loose or broken parts and leaks	
Check for damaged hoses and fittings	
Check tong dies for wear	See page 8-14
Check clamp cylinder for leaks	See page 8-14
Check hoses for wear or damage	See page 8-17
Check tool joint locks for tightness	See page 8-20
Check upper and lower IBOP valves for proper operation	See page 8-21
Weekly	
Check link tilt clamps for position and tightness	See page 8-6
Check stabbing guide and flippers for damage and wear	See page 8-14
Check clamp cylinder gate hinge pin for wear	See page 8-14
Check IBOP actuator cylinder for leaks	See page 8-17
Check IBOP actuator cam followers for wear or excessive play	See page 8-19
Check upper and lower IBOPs and IBOP crank for damage (if equipped)	See page 8-21
Check shot pin assembly for leaks	See page 8-23
Monthly	
Check elevator link eyes for wear	See page 8-8
Check link tilt bushings for wear	See page 8-9
Check link tilt actuator cylinders for leaks	See page 8-9
Check link tilt actuator cylinder pins for wear	See page 8-9
Check clamp cylinder body wear bushings for wear	See page 8-14
Check stabilizer springs for damage	See page 8-16
Check front and rear stabilizers for wear	See page 8-16
Check pins and bushings on IBOP actuator cylinder and yoke for wear	See page 8-17
Check shot pin assembly for wear or damage	See page 8-23
Yearly	
Check piston ring for pitting and chipping	See page 8-25
Check stem for pitting, grooves and chipping	See page 8-25
Replace GLYD rings, o-rings and bushings on rotating link adapter	See page 8-25
5 Years	
MPI Inspection	See page 8-31

After inspecting above components, repair or replace as necessary.

Precautions

To avoid serious injury or death, read and understand the following warnings before performing inspection and maintenance procedures:

Properly lockout the main power source before performing lubrication, inspection, or replacement procedures, unless specifically noted in this manual.

Wear protective glasses to prevent eye injuries from fluids under pressure, as well as other hazards.

Do not attempt any adjustments while the machine is moving.

Use caution when draining lubricant. It can be hot.

Never check for hydraulic leaks with your hands. Oil under pressure escaping from a hole can be nearly invisible and can penetrate skin causing serious injury. Always check for leaks with a piece of wood or cardboard and always wear protective eyewear when working on hydraulic components.

Always discharge the three hydro pneumatic accumulators before performing repairs on the hydraulic system.

Do not attempt repairs you do not understand.

Read and understand all safety precautions and warnings before performing maintenance procedures.

Elevator links

Disassembly/assembly

1. Disconnect and remove the drill pipe elevator from the elevator links.
2. Using the Varco Driller's Console (VDC), rotate the pipehandler 90° to position one of the elevator links directly below the front of the motor guard.
3. Remove the catch link bolt from the catch link.
4. Remove the clevis pin from the link, which connects the link tilt to the elevator link.
5. Using the sling, hoist the elevator link away from the pipehandler.
6. Rotate the pipehandler 180°, repeat the procedure to remove the other elevator link.

Elevator links

Inspection

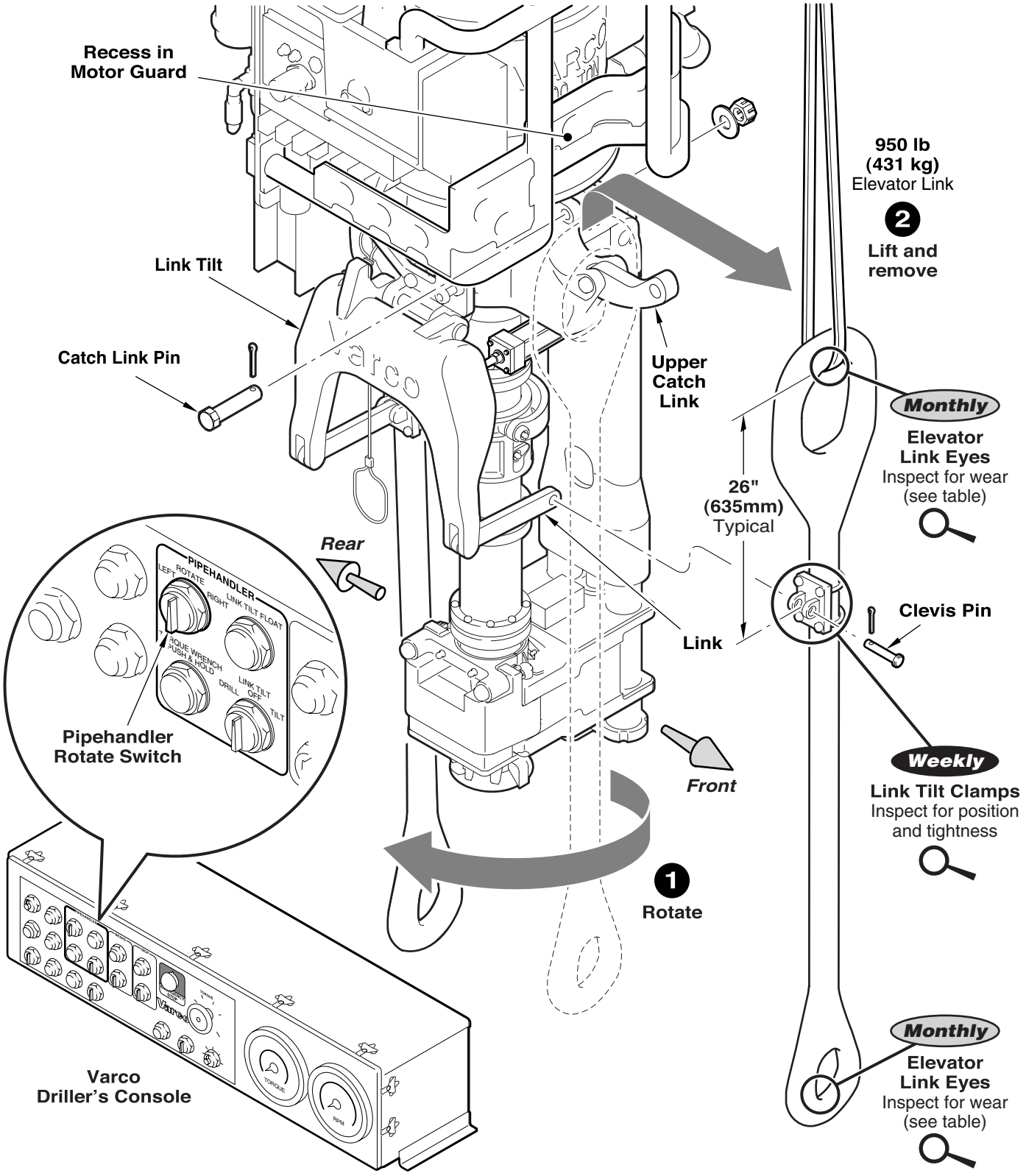

Elevator links

Inspection (Varco links only)

Wear Chart - Forged Links

Upper Eye Dimension (C)	Lower Eye Dimension (A)	Capacity (per set) in Tons
B = 2 7/8 in., 250-Ton		
4 7/8 inches	2 3/16 inches	225
4 3/4 inches	2 1/16 inches	200
4 1/2 inches	2 inches	175
4 3/16 inches	1 7/8 inches	150
B = 3 1/2 in., 350-Ton		
5 inches	2 3/4 inches	350
4 13/16 inches	2 9/16 inches	300
4 5/8 inches	2 3/8 inches	225
7 7/16 inches	2 3/16 inches	175
B = 4 1/2 in., 500-Ton		
6 inches	3 1/2 inches	500
5 3/4 inches	3 1/4 inches	420
5 1/2 inches	3 inches	325
5 1/4 inches	2 3/4 inches	250
B = 6 1/4 in., 750-Ton		
7 1/2 inches	7 1/2 inches	750
7 1/4 inches	7 1/4 inches	725
7 inches	7 inches	700
6 3/4 inches	6 3/4 inches	650

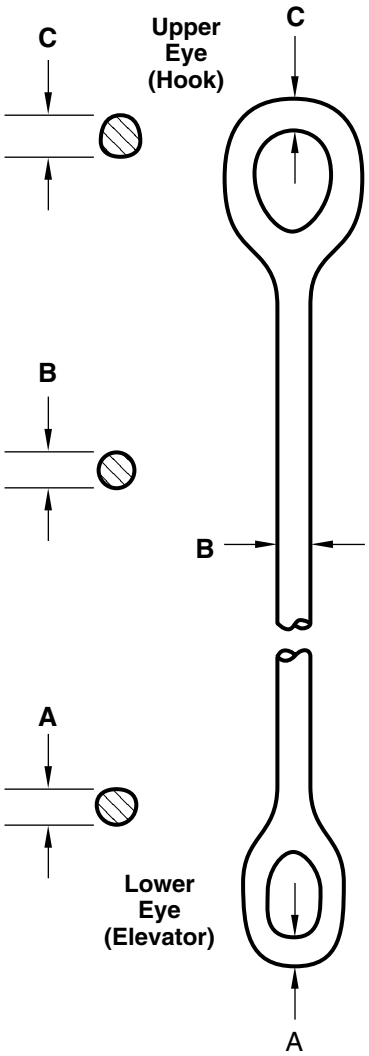

To determine the strength of worn links, measure (with calipers) the amount of eye wear and compare the measurements with the above Wear Chart to find the current capacity. The capacity of the set of links is determined by the weakest link.

Link tilt

Disassembly/assembly

1. Shutdown the power and bleed the system (turn the valve on the bottom of the gearcase to the SHUT DOWN position).
2. Disconnect the hydraulic lines from the link tilt cylinders and cap all connections.
3. Unpin and remove the link tilt cylinders.
4. Unpin and remove the link tilt crank.

Use the recommended spanner wrench to remove the rod gland seal.

Link tilt

Inspection

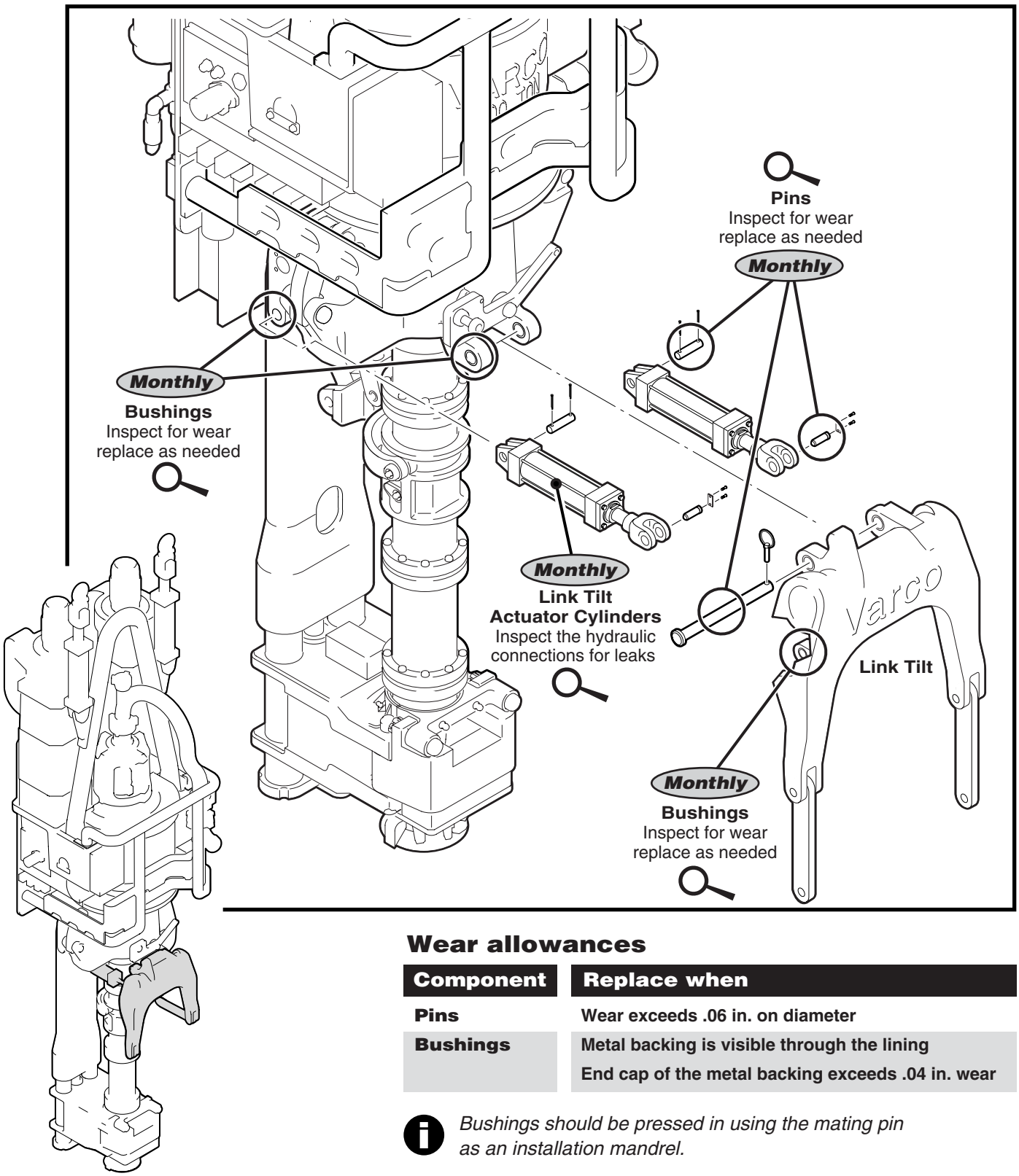

Wear allowances

Component	Replace when
Pins	**Wear exceeds .06 in. on diameter**
Bushings	**Metal backing is visible through the lining** **End cap of the metal backing exceeds .04 in. wear**

Bushings should be pressed in using the mating pin as an installation mandrel.

Torque wrench assembly

Clamp cylinder body disassembly/assembly

1. Shutdown power and bleed the system (turn the valve on the bottom of the gearcase to the SHUT DOWN position).
2. Disconnect the hydraulic lines on the clamp cylinder body and cap all connections.
3. Support the clamp cylinder body.
4. Remove the two hex-head capscrews and lockwashers that hold the end cap in place.
5. Remove the end cap, spring spacer, spring sleeve, and spring.
6. Slowly lower the clamp cylinder body off the torque wrench frame and move it to a suitable work area.
7. Remove the 16 hex-head screws and lockwashers that hold the wear bushings on the clamp cylinder body.
8. Remove the four wear bushings, and replace the wear bushings as necessary.
9. Remove the two hinge pin retainer hex-head screws.
10. Swing out the two hinge pin retainers.
11. Remove the two hinge pins.
12. Remove the gate, front jaw, front stabilizer, and front stabbing guide.
13. Remove the two socket-head capscrews and hi-collar washers from the front jaw.
14. Remove the front jaw from the gate.
15. Repeat steps 11 and 12 for the rear jaw.
16. Push the cylinder head in enough to relieve the load on the cylinder head ring. Remove the cylinder head ring. Use care in this operation.

Torque wrench assembly

17. Slowly pull out the cylinder head using the threaded holes. Remove and discard the piston seal.
18. Carefully push the piston out of the body. Remove and discard the piston seal.
19. Remove the wiper rod and rod seal from the body. Discard the seals.
20. Clean the piston, cylinder head, and the body. Clean and lightly lubricate the new seals and seal surfaces prior to reassembly.

Use recommended spanner wrench to remove the rod gland seal.

Assembly is performed in reverse order of disassembly.

Torque wrench assembly

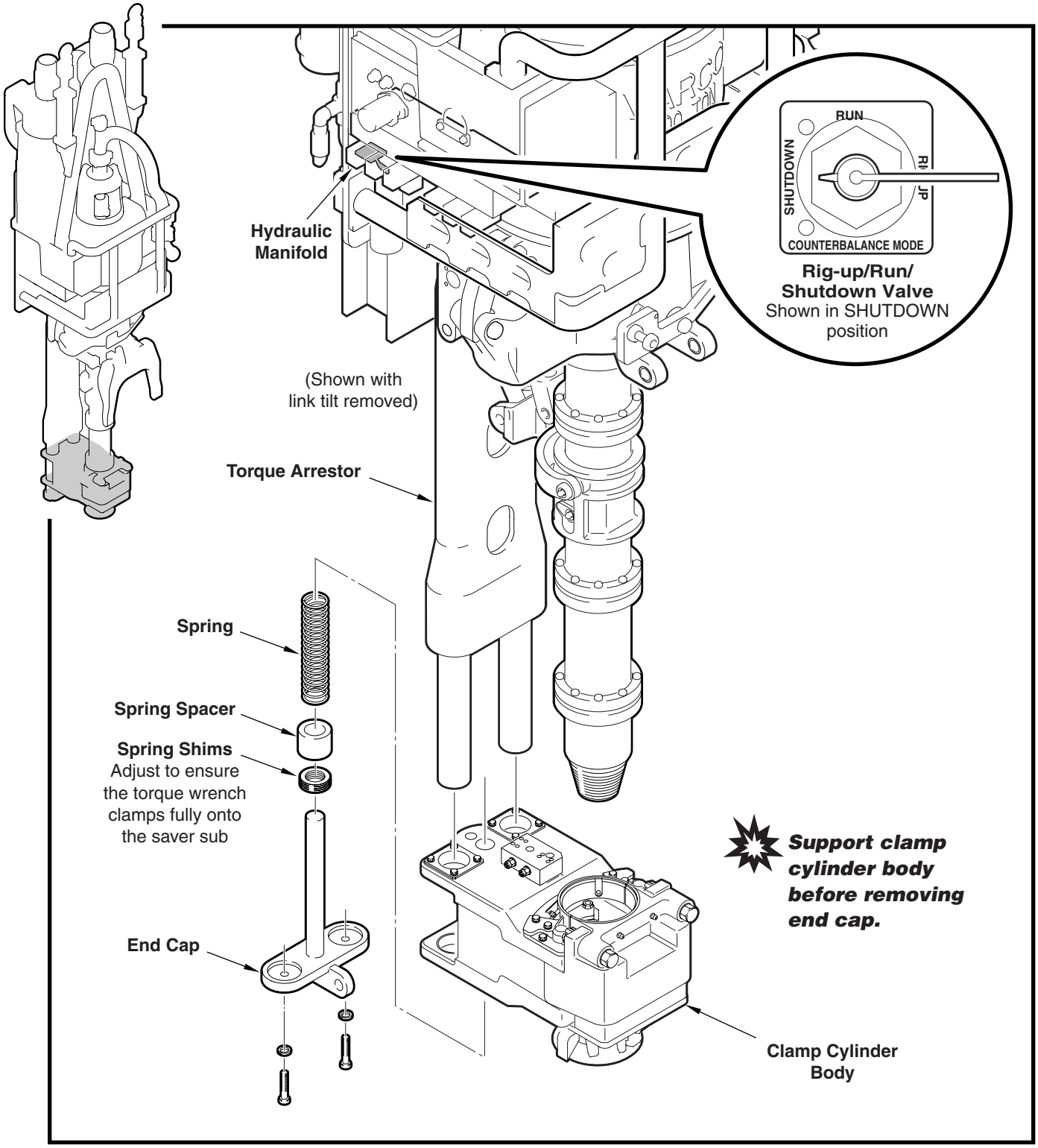

Torque wrench assembly

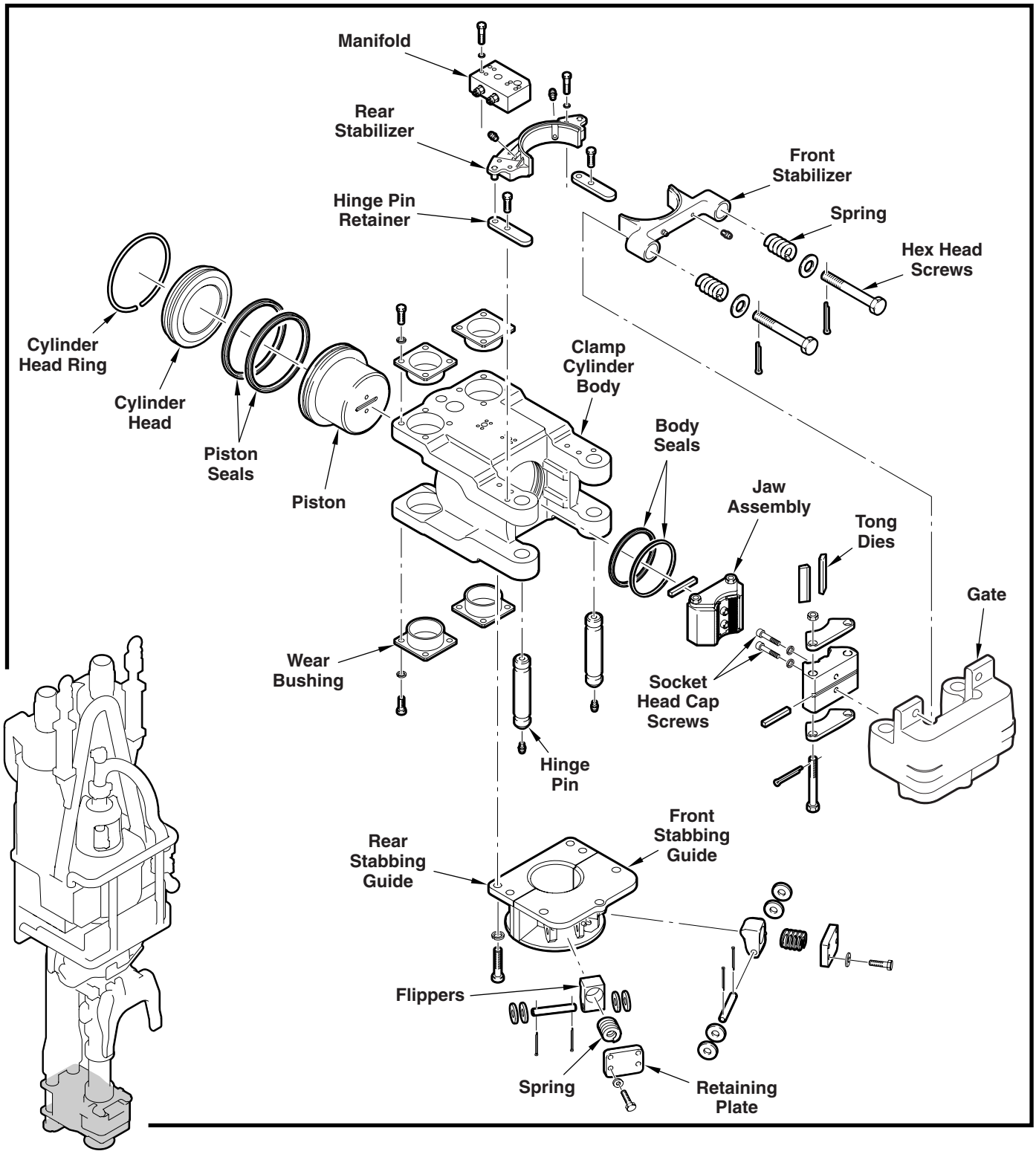

Torque wrench assembly

Inspecting the clamp cylinder body

Wear allowances

Component	Replace when
Stabilizer	Wear exceeds 1/8 in.
Flippers	Wear exceeds 1/8 in.

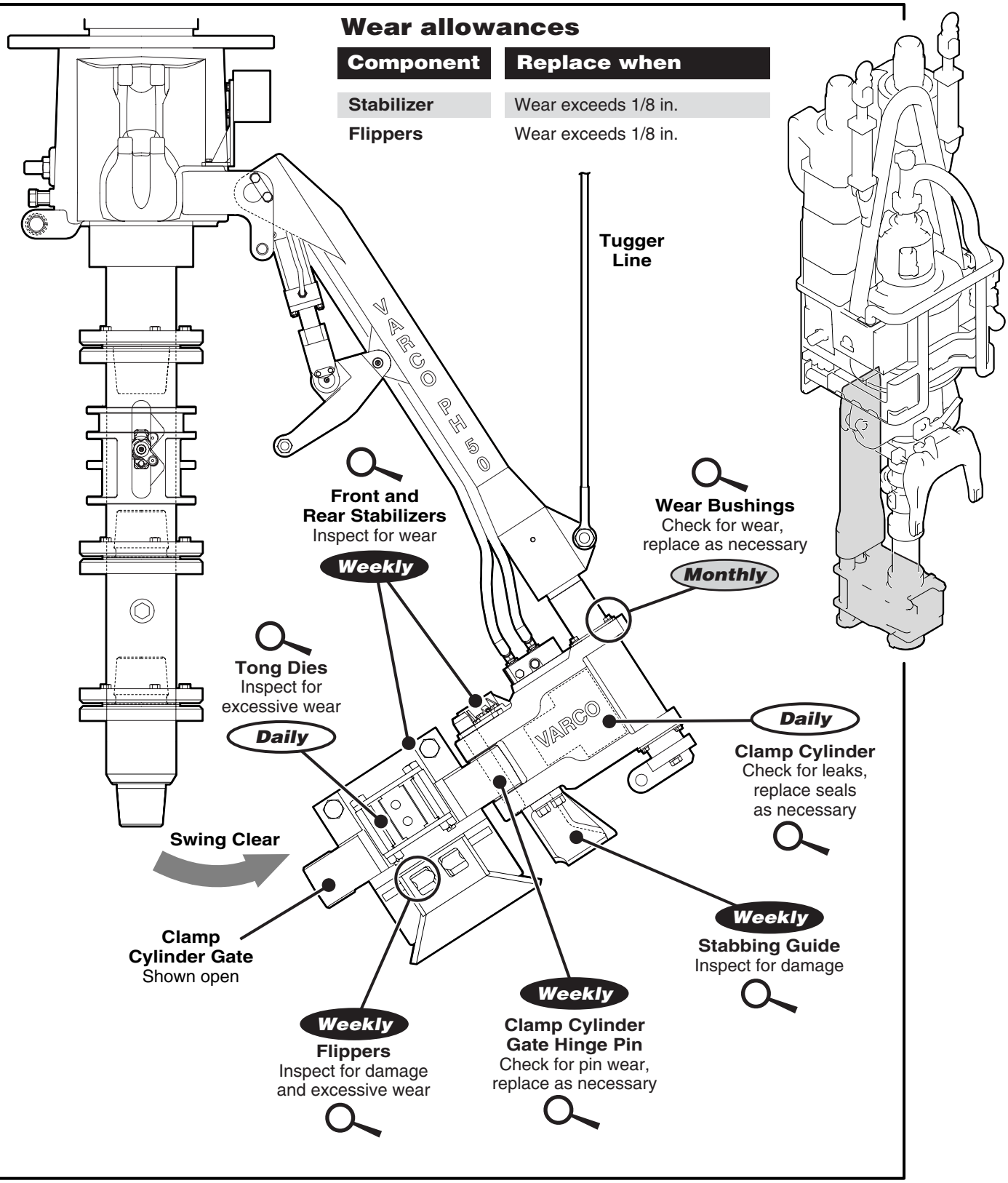

Torque wrench assembly

Inspecting the stabilizer

Remove the two bolts (with slotted nuts and cotter pins) that hold the front stabilizer. Check the springs for damage and replace if needed. Pack spring cavities with grease and reassemble. Be sure all safety wire, cotter pins, and capscrews are tight, and tighten or replace as necessary.

Torque wrench assembly

Inspecting the stabilizer

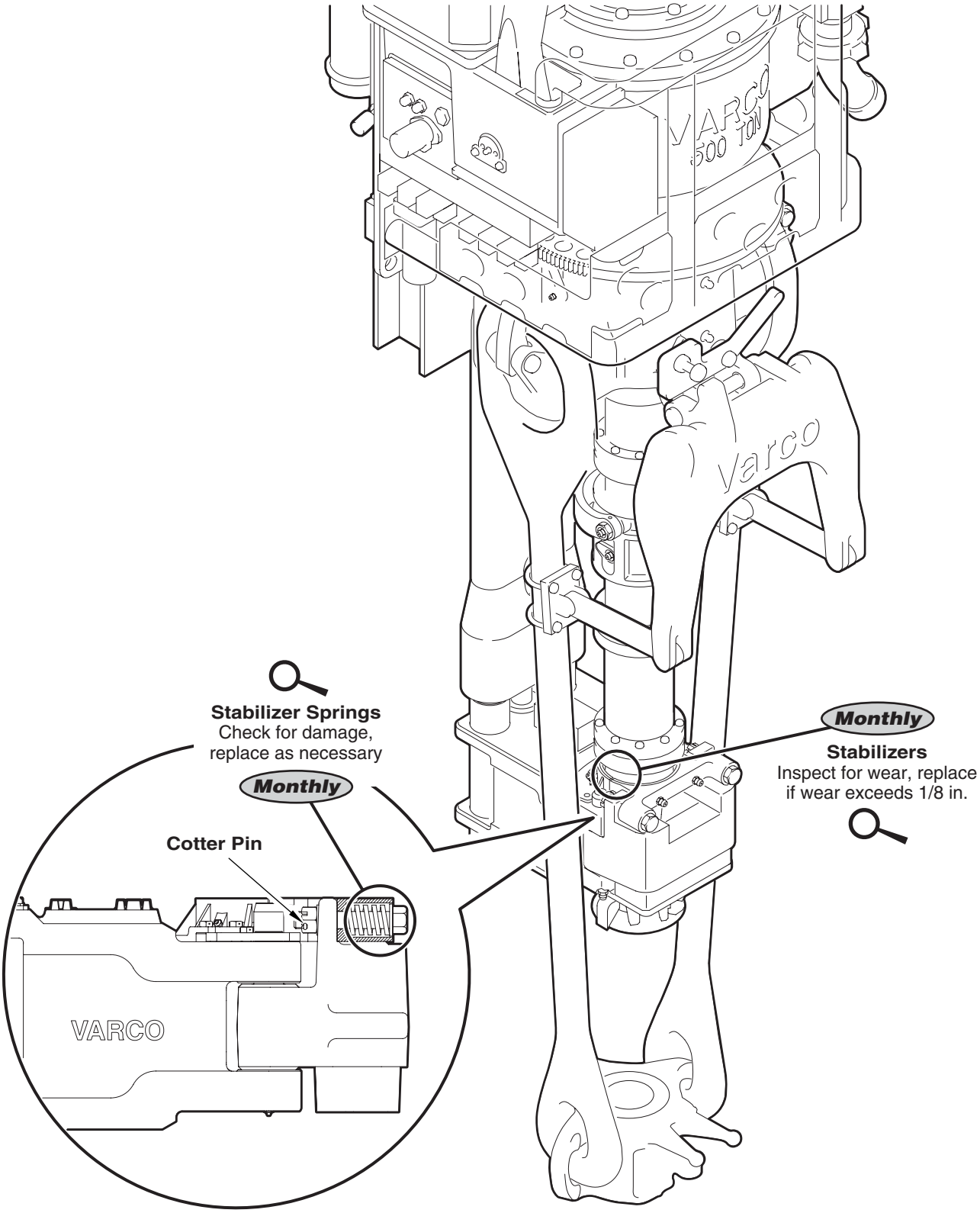

Torque wrench assembly

Inspecting the IBOP actuator cylinder and yoke

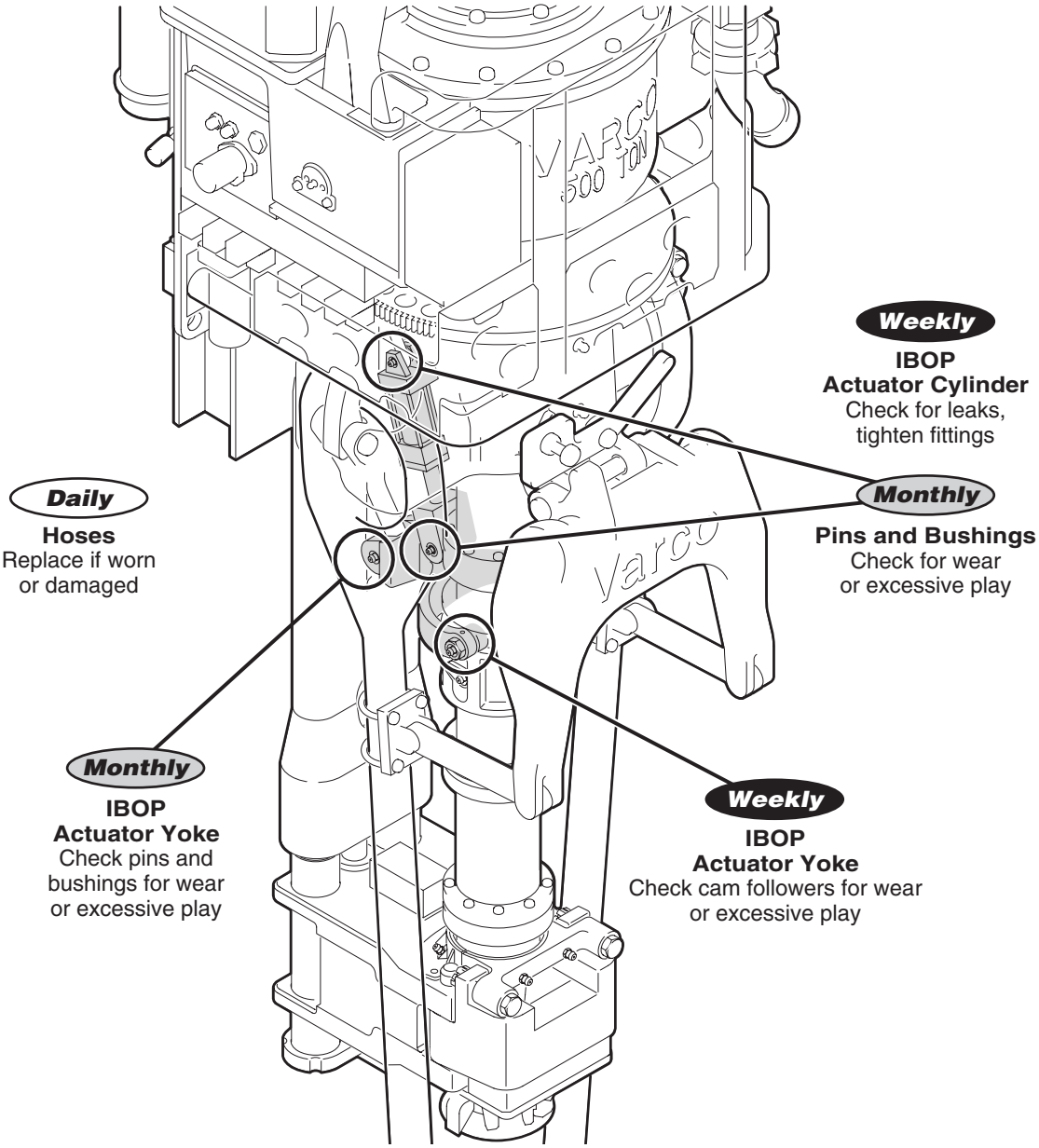

Wear allowances

Component	Replace when
Pins	Wear exceeds .03 in. on diameter
Bushings	Metal backing is visible through the lining
	End cap of the metal backing exceeds .04 in. wear

Bushings should be pressed in using the mating pin as an installation mandrel

Torque wrench assembly

Inspecting the IBOP actuator cylinder and yoke

Disassembling the IBOP actuator cylinder and yoke

1. Shutdown the power and bleed the system (turn the valve on the bottom of the gearcase to the SHUT DOWN position).
2. Remove one gate hinge pin, open the gate, and pull back the torque wrench assembly.
3. Disconnect the hydraulic lines from the IBOP actuator cylinder and cap all connections.
4. Unpin and remove the IBOP actuator cylinder and yoke.
5. Replace the hydraulic lines as necessary.
6. Check for cylinder leaks.

Well control system

Tool joint locks disassembly/assembly

Do not reuse locking screws.

1. Lubricate the locking screw threads, screw head bearing area, and the tapers of the inner rings with molybdenum disulfide grease, such as Molykote Gn paste.
2. Make sure the save sub, IBOPs, and main shaft are free of “high spots”, such as tong marks. If high spots exist, remove with file or light grinding.
3. Slide the tool joint lock over the main shaft, IBOP valves, and saver sub.
4. Clean the IBOP valves, main shaft, and saver sub surfaces thoroughly. Make sure these surfaces are smooth and free of grease, oil, and pipe dope.
5. Locate the tool joint lock symmetrically at each joint.

Never tighten locking screws before the tool joint lock is at the correct location, otherwise it will not slide freely.

6. Take any three or four locking screws equally spaced and tighten them to establish parallel or perpendicular position of the tool joint lock collars relative to the main shaft, IBOP valves, and saver sub respectively. This properly seats the collars on the taper of the inner ring and aligns the collars.
7. Using a torque wrench, tighten all locking screws gradually in either a clockwise or counterclockwise sequence (not in a diametrically opposite sequence). Continue tightening all of the screws until they reach 185±5 ft lb.
8. Make sure no screw turns any more. The gap between the tool joint collars should be as equal as possible all the way around.
9. Safety wire all screws.

Well control system

Inspecting the tool joint locks

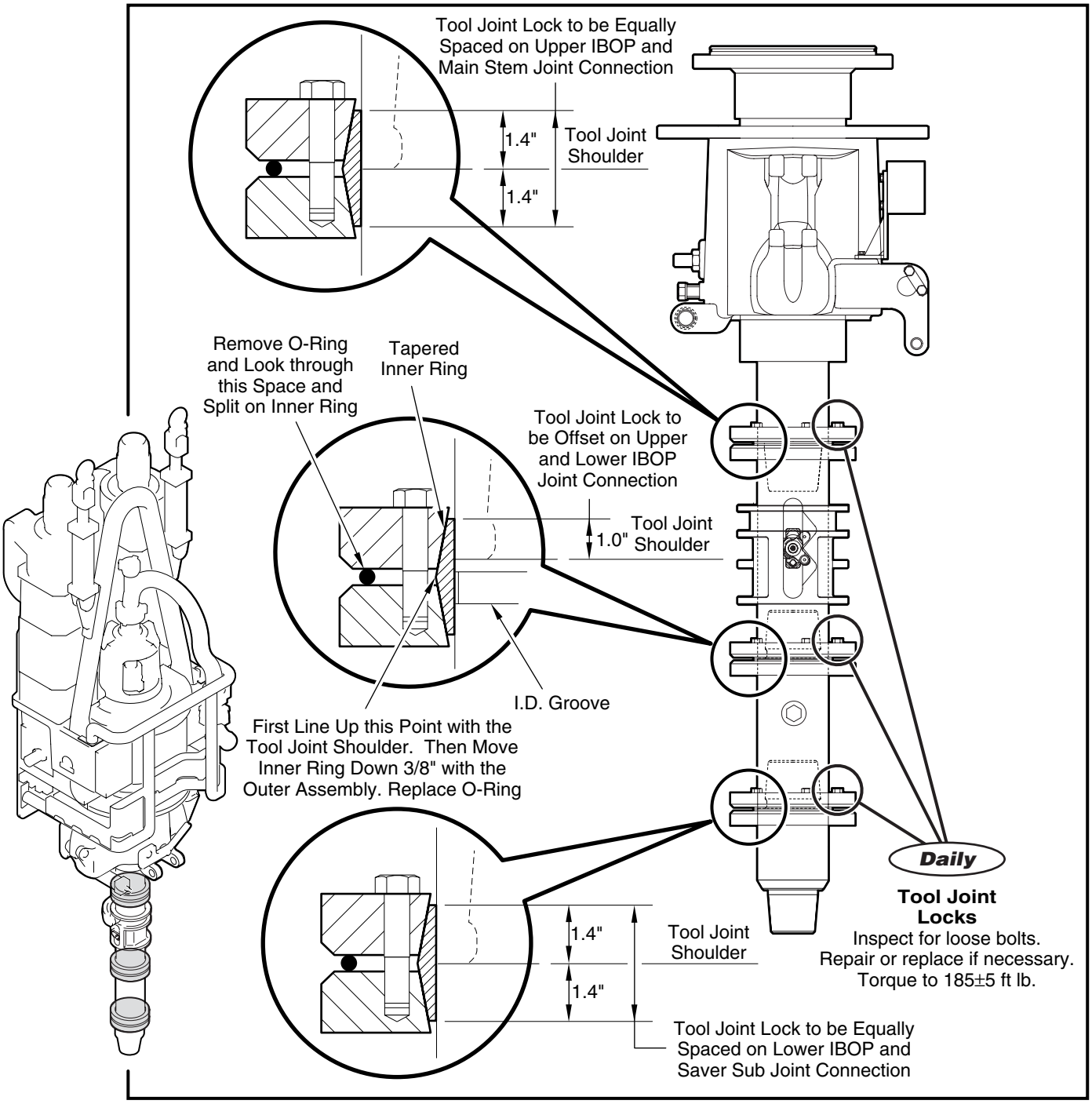

Removing the Tool Joint Locks

- Gradually release the locking screws all the way around. Initially release each screw about a quarter of a turn, avoid tilting and jamming the collars. Do not remove the screws completely at this time, otherwise the collars may spring off.
- Remove any rust formed or dirt collected adjacent to the tool joint lock. Once the screws are loose, remove the tool joint lock from the saver sub, IBOP valves, and main shaft.

Well control system

Inspecting the IBOP valves and saver subs

Wear allowances

Component	Replace when
Saver Sub	Threads have been recut to a minimum shoulder-to-shoulder length of 5 in.

See the IBOP Service Manual for IBOP disassembly/assembly and servicing information.

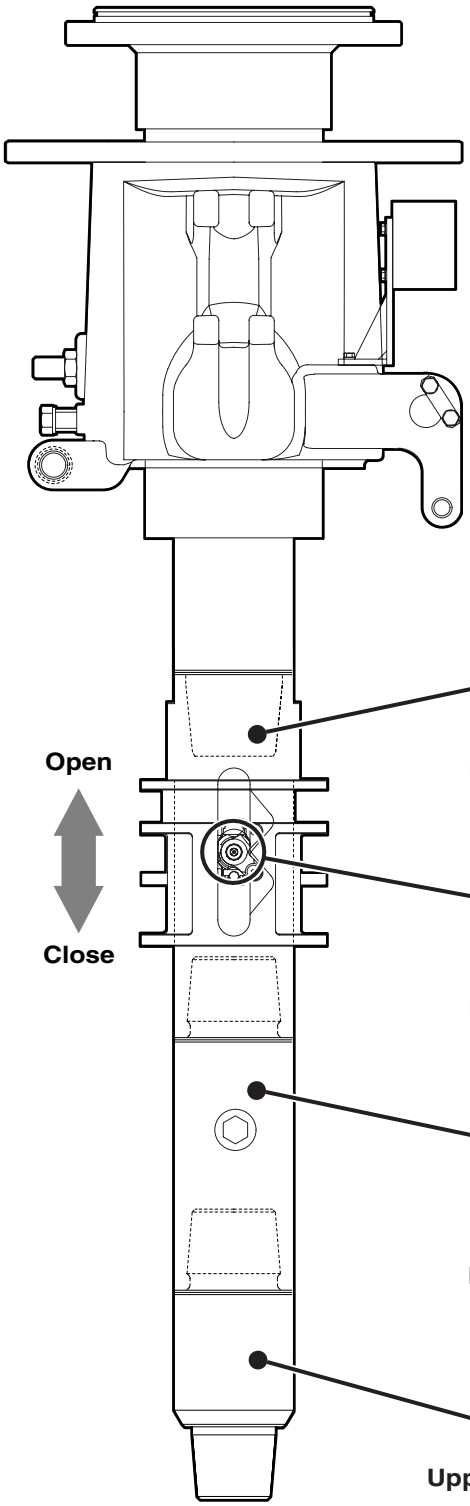

Weekly

Upper IBOP
(Remote)
Inspect for damage

Daily

Valve
Check for proper operation and **pressure test** for leaks

Weekly

IBOP Crank
(Remote)
Inspect for damage

Weekly

Lower IBOP
(Manual)
(Optional)
Inspect for damage

Daily

Valve
Check for proper operation and **pressure test** for leaks

5 Years

Upper and Lower IBOP

MPI

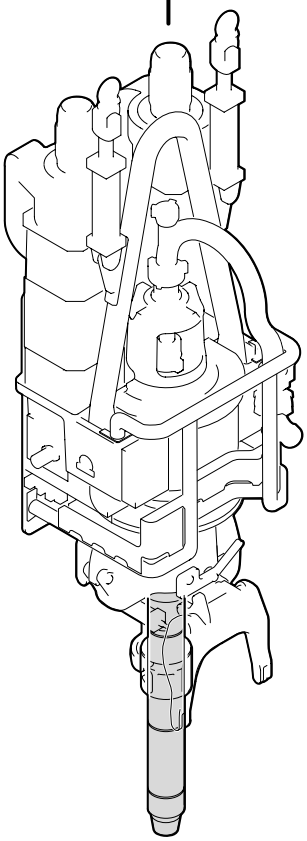

8

Shot pin assembly

Disassembly/assembly

1. Disconnect the hydraulic and electrical lines.
2. Remove the capscrews that attach the shot pin assembly to the main body.
3. Remove the capscrew and lockwasher holding the shot pin cover in place
4. Remove the shot pin components as shown in the illustration on Page 7-24 (end cap, o-rings, rod seal assembly, shot pin)
5. Inspect the shot pin bearing and press the bearing out of the shot pin mounting bracket if the bearing is scored or damaged.
6. Remove the capscrew and lockwasher that hold the pinion gear in place, and remove the gear.
7. Remove the capscrews and lockwashers that hold the hydraulic motor in place and remove the motor.

Inspect the disassemble parts and replace any worn or damaged parts. Assemble the shot pin in the reverse order of disassembly.

Shot pin assembly

Inspection

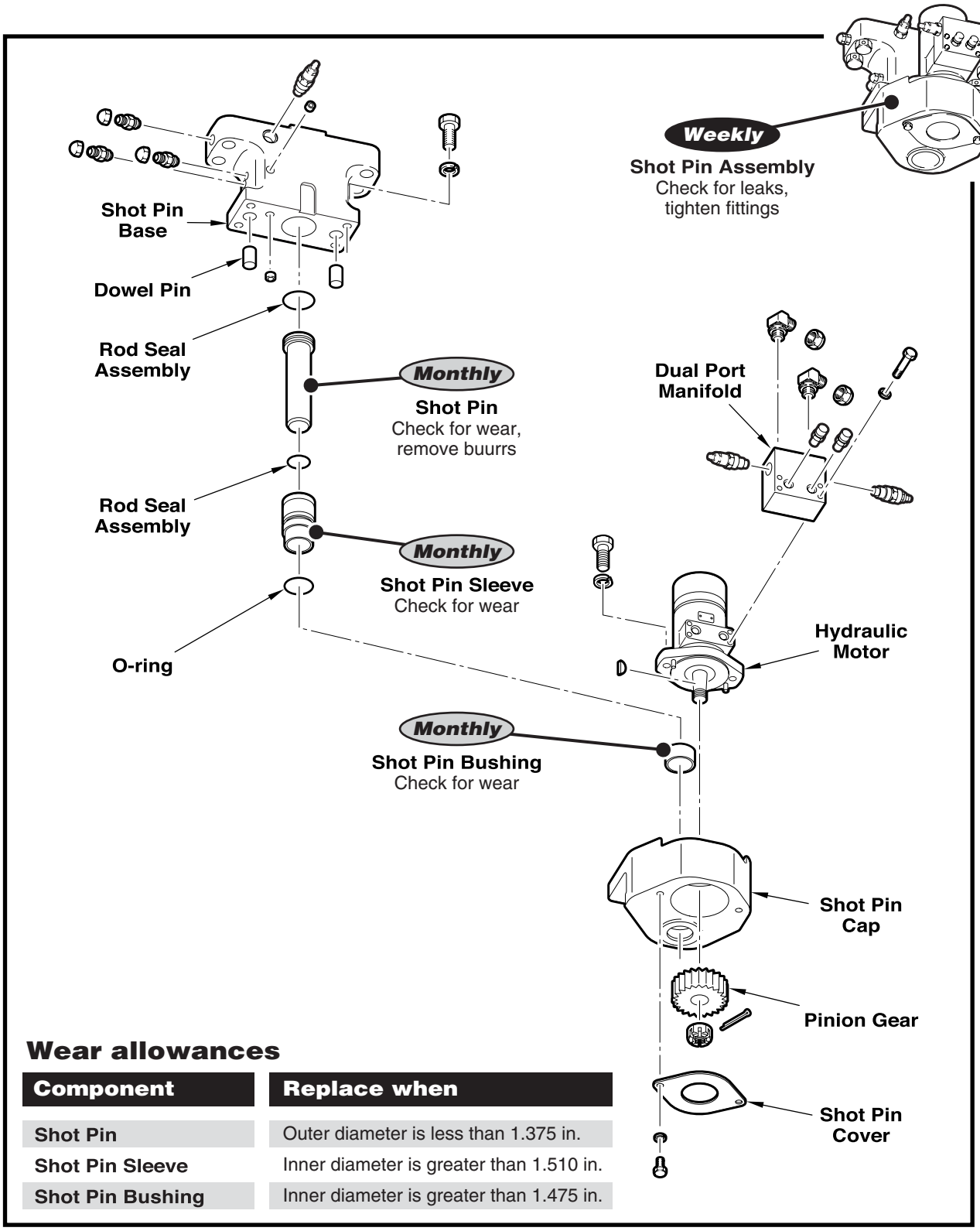

Wear allowances

Component	Replace when
Shot Pin	Outer diameter is less than 1.375 in.
Shot Pin Sleeve	Inner diameter is greater than 1.510 in.
Shot Pin Bushing	Inner diameter is greater than 1.475 in.

Rotating link adapter/load stem

Removing the pipehandler and link tilt from the top drive (while in mast)

1. Drain the oil from the gearbox.
2. Disconnect and cap all tubing, remove the shot pin assembly and the landing collar.
3. Build a support over well center to support the weight of the link adapter.
4. Lower the top drive to the support built in Step 3.
5. Remove the bolts that attach the load stem to the main body.
6. Raise the top drive slowly to separate the link adapter from the main body.
7. Move the link adapter assembly to a clean, safe work area.
8. Orient the assembly with the stem flange up and block the entire assembly so that it is secure in this position.

Disassembling the link tilt assembly

1. Attach a 3-point sling to the stem and pull the stem out of the link adapter.
2. Turn the stem over and place it on its flange.

Protect the internal surfaces of the rotating link adapter and the surfaces of the drive stem when separating the two components. When removing the rotating link adapter from the stem, carefully tap with a mallet. There can be misalignment between the two bores when raising the drive stem and gear assembly.

The piston ring is assembled with a light press fit. Provide a support under the gear so that it does not drop when it breaks loose.

3. Remove and discard all rotary seals, O-rings, thrust ring, and the wear bushings from inside the rotating link adapter and gear inside dimension.
4. Remove and discard the stem flange O-rings and stem bore shaft seals.

Rotating link adapter/load stem

Inspecting the rotating link adapter

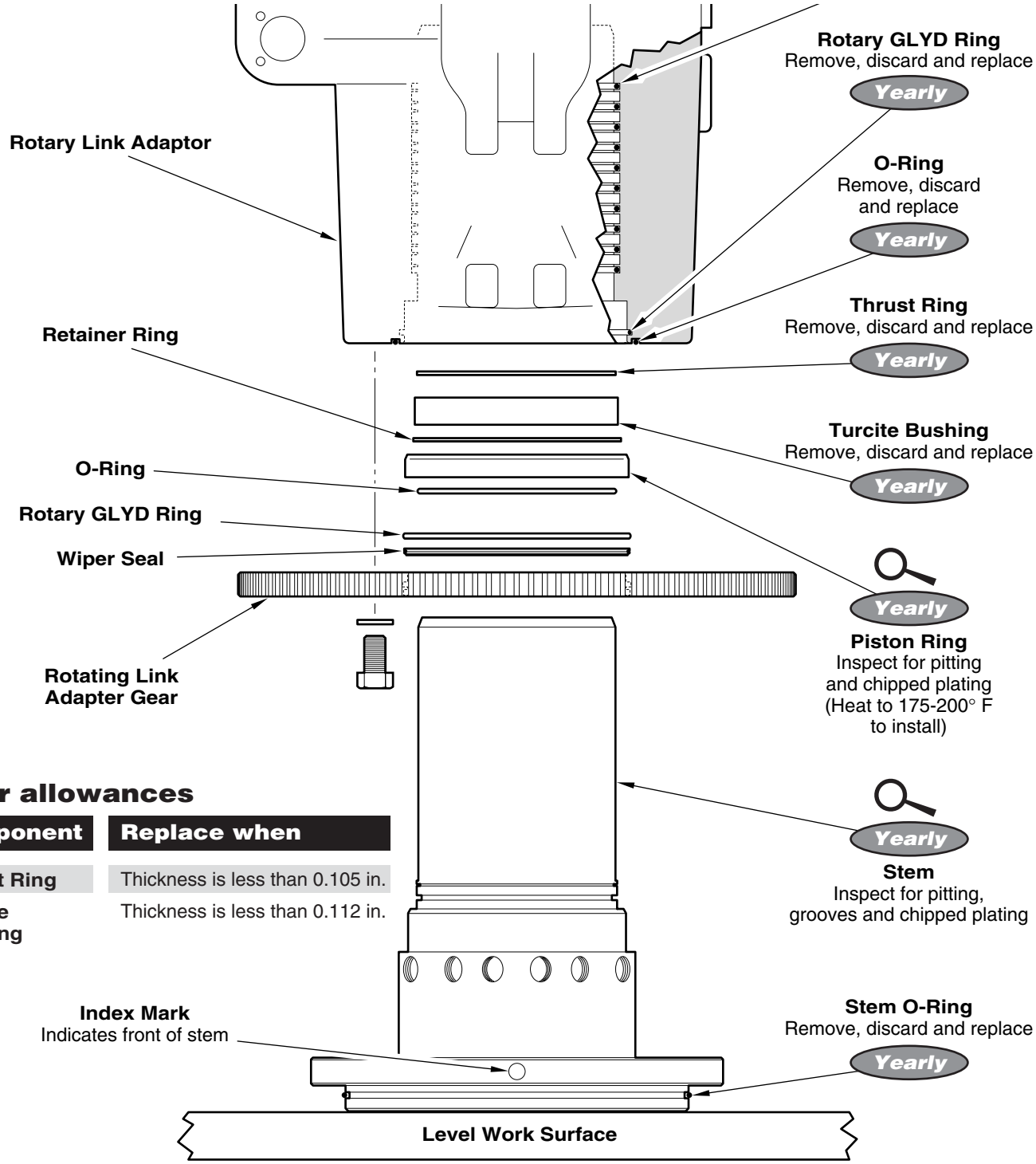

Wear allowances

Component	Replace when
Thrust Ring	Thickness is less than 0.105 in.
Turcite Bushing	Thickness is less than 0.112 in.

Rotating link adapter/load stem

Assembling the link adapter

1. Orient the stem so the drive stem flange is down on a suitably protected surface.
2. Install the gear with its rotating seal and wiper in place.
3. Install the O-ring for the piston ring.
4. Install the piston ring by tapping on it lightly with a mallet to press it into place (Heat to 220-250°)
5. Install the retainer ring.
6. Install all of the rotary seals on the rotating link adapter, and an O-ring on the top surface.
7. Install the two wear bushings and the thrust ring in the rotating link adapter.
8. Rest the rotating link adapter on its bottom surface.
9. Clean and then lubricate (with hydraulic oil) the sealing surface of the stem and the inside diameter of the rotating link adapter.
10. Attach three lifting slings symmetrically through the holes on the top of the stem flange and slowly lower the assembly into the rotating link adapter body. Hammering with a large plastic mallet is an aid when assembing the stem to the link adapter.

Make sure the seals do not twist in the grooves.

11. Install the gear onto the link adapter and install the bolts.
12. Pressure test each port at 1,000 psi and inspect for leaks at the adjacent ports.
13. Grease all lubrication points on the assembly.
14. Inspect the lower gearbox seal (located inside the stem flange), and replace as necessary.

Rotating link adapter/load stem

Assembling the link adapter to the top drive (while in mast)

1. Check the condition of the manshaft wear ring and replace if there is any evidence of grooving.
2. Place the rotating link adapter assembly back on the support built over well center, orienting the assembly so that the stem flange is up, and so that the idex mark faces forward.
3. Carefully lower the top drive to engage the mainshaft in the stem bore and then the stem flange pilot diameter is in the main body bore.
4. Install the flange bolts.
5. Install the link tilt cylinders, pin, and secure in place.
6. Install the link tilt crank and pin, and secure in place.
7 Install all hose assemblies.
8. Install tubing.
9. Install the shot pin assembly.
10. Fill the gearcase with gear oil (see *Lubrication*).
11. Check and fill the hydraulic oil as necessary.
12. Turn on the top drive and perform all pipehandler functions several times, checking for proper function and any leaks.
13. Re-check the hydraulic oil level and fill as necessary.

Always install a new mainshaft seal and use care not to damage the seal or the case.

A light coating of grease applied to the O-ring helps in installing the rotating link adapter assembly into the main body.

Always install a new drive stem O-ring and use care not to damage the O-ring or the case.

Wireline adapter

Inspection

Inspect the condition of the sheaves before and after each use

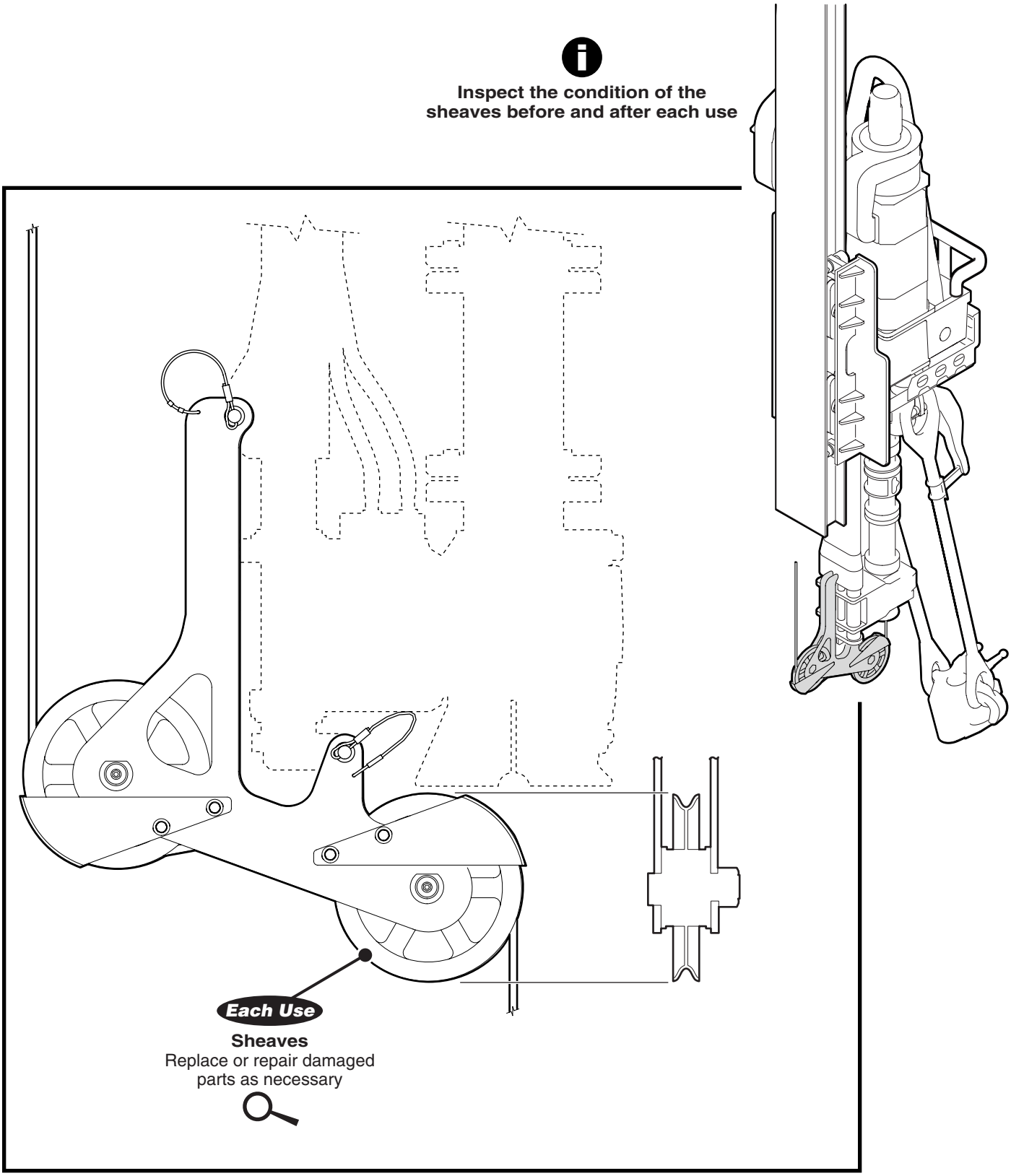

Nondestructive Examination (NDE)

Yearly (or after approximately 3,000 operating hours), perform a Nondestructive Examination (NDE) of all critical load path items.

NDE inspection includes visual examination, dye penetrant examination, magnetic particle inspection, ultrasonic inspection, x-ray examination, and other methods of nondestructive testing for metallurgical integrity.

Visual inspection

Use calipers on a regular basis to measure the amount of wear on the elevator link eyes. Compare the measurements with the *Wear Chart* to determine the current strength of the elevator links. The capacity of the links equals the capacity of the weakest link.

Nondestructive Examination (NDE)

Magnetic Particle Inspection (MPI)

Once a year, or every 3,000 operating hours, Varco recommends performing a Magnetic Particle Inspection (MPI) of the exposed surfaces of all load carrying components to reveal any fatigue or crack indications. Any indications found are a potential cause for replacing the suspect component. Round bottom pits and erosion are acceptable as long as the defect is less than 1/16 in. deep. Larger defects or any crack indications are cause for replacing the suspect component.

After approximately five years, or 15,000 operating hours, depending on the severity of operating conditions, Varco recommends performing a MPI of all load carrying components over their entire surface (including internal bores) to reveal any fatigue or crack indications. Any indications found are a potential cause for replacing the suspect component. Round bottom pits and erosion are acceptable as long as the defect is less than 1/16 in. deep. Larger defects or any crack indications are cause for replacing the suspect component. The load carrying components are:

- ❑ Mainshaft (lower portion)
- ❑ Bail
- ❑ Landing collar (yearly)
- ❑ Upper and lower IBOP
- ❑ Link adapter
- ❑ Saver, crossover, and spacer subs
- ❑ Power subs
- ❑ Power swivels
- ❑ Elevator links

Details on MPI procedures are in the following publications:

I.A.D.C.	*Drilling Manual, 9th Edition*
ASTM A-275	*Std. Method for Magnetic Particle Inspection of Steel Forgings*
ASTM E-709	*Std. Recommended Practice for Magnetic Particle Inspection*

Nondestructive Examination (NDE)

Ultrasonic Inspection

In addition to the MPI, Varco also recommends performing an Ultrasonic Inspection of the above components to detect any erosion of the inside diameter. Any erosion reduces the load-carrying capability of the part. Any subsurface irregularity can also compromise a component's integrity.

Details on Ultrasonic Inspection procedures are in the publication:
ASTM A-388 *Std. Practice for Ultrasonic Examination of Heavy Steel Forgings.*

Safety valve inspection procedures (IBOP)

Upper and lower IBOP valves, because of their internal grooves and shoulders, are particularly susceptible to corrosion fatigue cracking. These internal diameter changes act as stress risers for bending and tensile loads. It is especially important to properly inspect the IBOP valves on a frequent basis. Read and use the IBOP valve inspection procedures described in the *IBOP Service Manual* (SM00611).

Hydraulic system

The hydraulic control system is a completely self-contained, onboard system. A 10-horse power, 1800 rpm, AC motor, drives two hydraulic pumps and powers the hydraulic system. A fixed displacement pump drives the lube oil system motor. A variable displacement pump provides hydraulic power for the AC motor brakes, powered rotating head, remote actuated IBOP, pipe backup clamp cylinder, link tilt, and counterbalance system. Three hydro-pneumatic accumulators are located on the main body.

The hydraulic manifold attaches to the main body and contains solenoid, pressure and flow control valves.

A sealed stainless steel reservoir supplies hydraulic oil, eliminating the need for draining and refilling during normal rig moves. The reservoir is mounted between the AC drilling motors and is equipped with strainers and an oil level sight gauge.

Illustrated index

Specifications	
Pump Motor	10 hp, 1,800 rpm, AC motor
Reservoir Capacity	25 gal

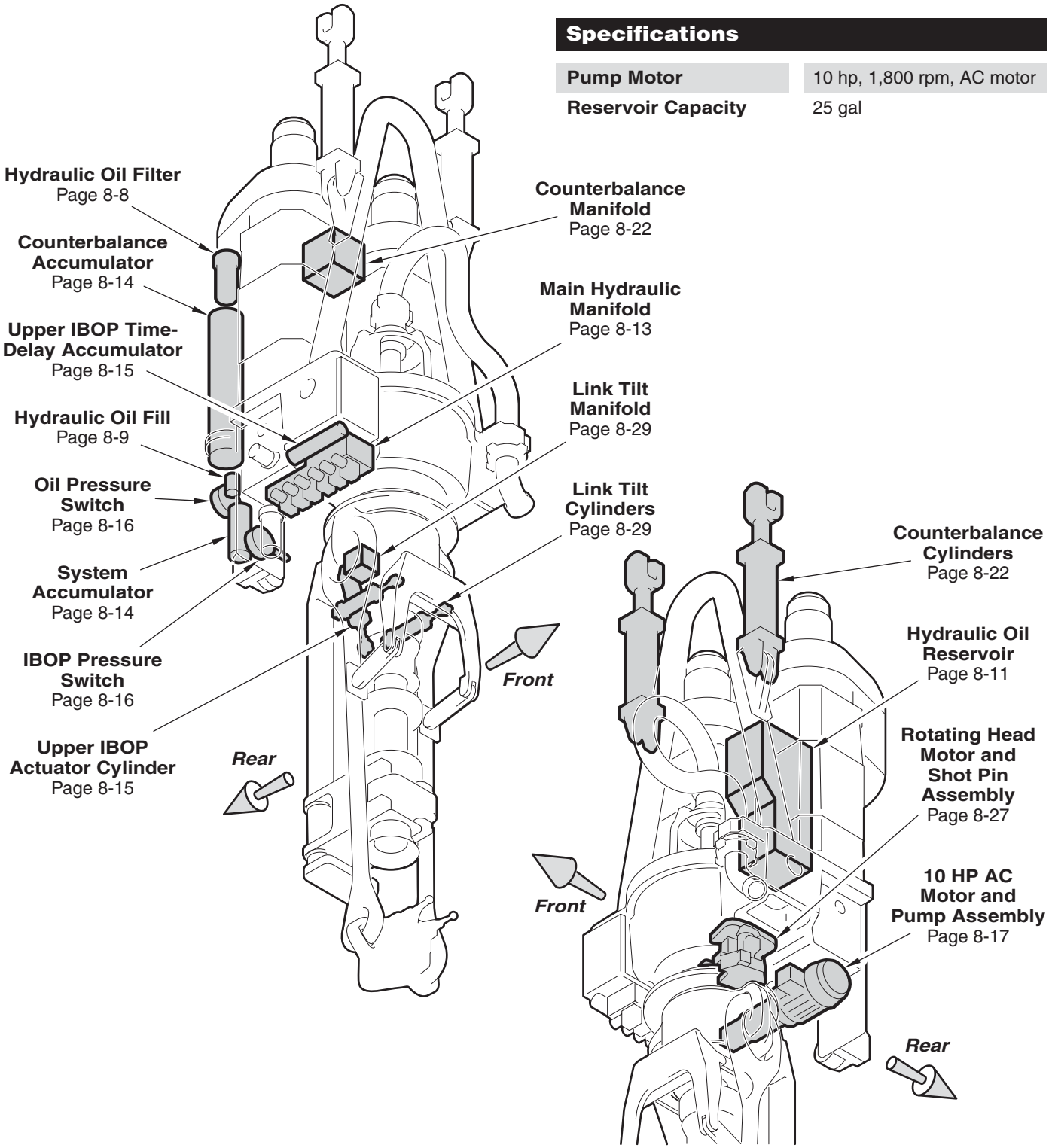

Hydraulic system diagram

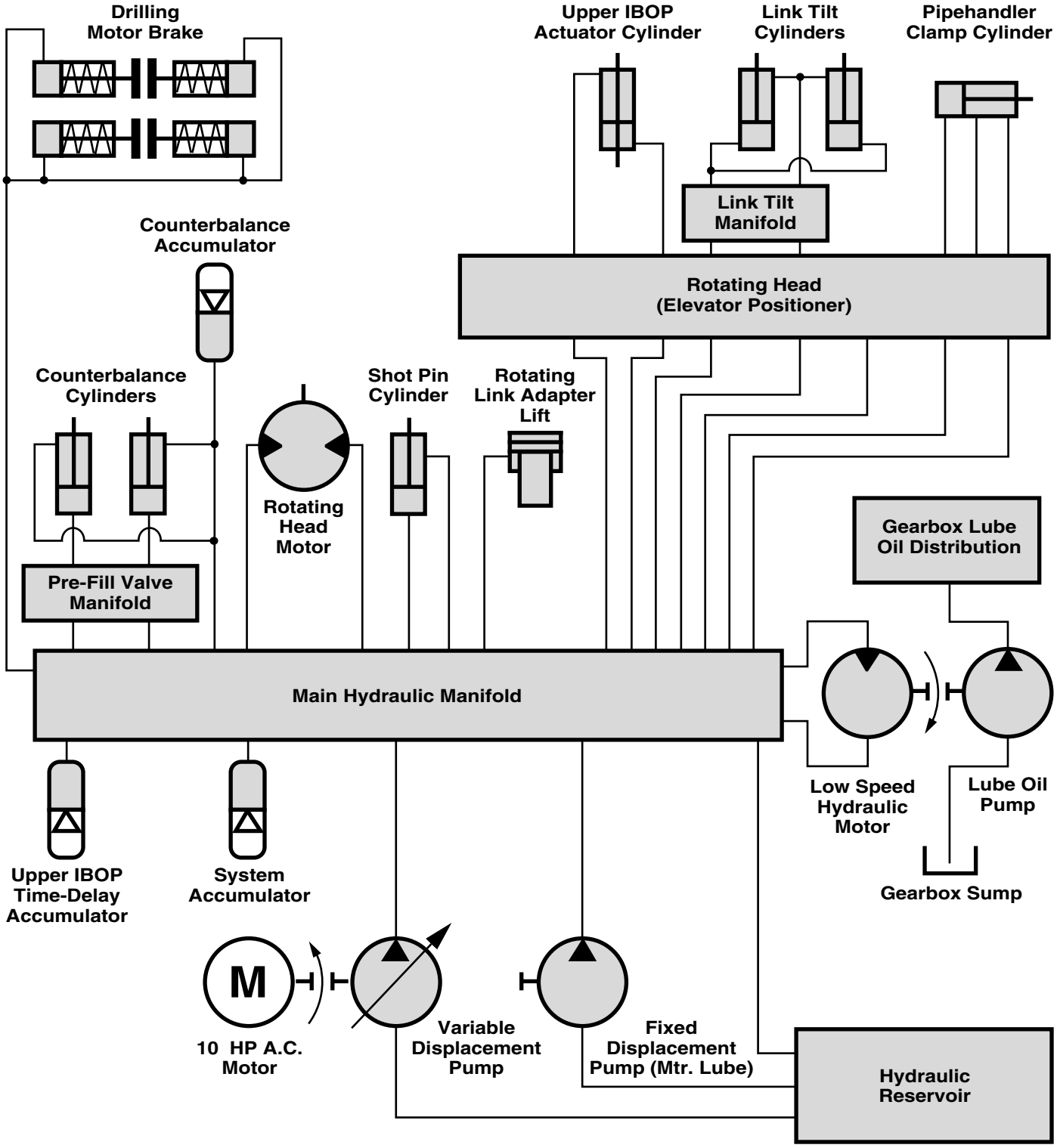

Inspection

Precautions

To avoid serious injury or death, read and understand the following warnings before performing inspection and maintenance procedures:

Properly lockout the main power source before performing lubrication, inspection, or replacement procedures, unless specifically noted in this manual.

Wear protective glasses to prevent eye injuries from fluids under pressure, as well as other hazards.

Do not attempt any adjustments while the machine is moving.

Use caution when draining lubricant. It can be hot.

Never check for hydraulic leaks with your hands. Oil under pressure escaping from a hole can be nearly invisible and can penetrate skin causing serious injury. Always check for leaks with a piece of wood or cardboard and always wear protective eyewear when working on hydraulic components.

Always discharge the three hydro pneumatic accumulators before performing repairs on the hydraulic system.

Do not attempt repairs you do not understand.

Read and understand all safety precautions and warnings before performing maintenance procedures.

Inspection

Release all hydraulic oil pressure by bleeding accumulators before disconnecting hydraulic lines. Turn the counterbalance valve to shutdown mode to bleed the hydraulic system. Hydraulic oil under pressure can penetrate skin and cause serious injury.

Before opening the hydraulic system, thoroughly clean work area, and maintain system cleanliness by promptly capping all disconnected lines. Dirt is extremely harmful to hydraulic system components and can cause equipment failure and subsequent injury to personnel.

Use care when handling components to prevent nicking close tolerance finishes.

Hydraulic fluid escaping under pressure can penetrate the skin causing serious injury. Avoid injury by discharging the three accumulators and relieving pressure before disconnecting hydraulic lines. Always search for hydraulic leaks with a piece of cardboard or wood-not with your bare hands. Get immediate medical attention for hydraulic fluid injuries. Fluid injected into the skin must be surgically removed within a few hours or gangrene may result. Do not tighten hydraulic fittings while they are under pressure.

Inspect the hydraulic system daily for leaks at fittings, damaged hose covers, kinked or crushed hoses, hard or stiff hoses, and damaged or corroded fittings. In addition, during the inspection, tighten or replace any leaking port connections, and clean any dirt buildup from hydraulic components.

Replace worn or damaged hydraulic system components immediately.

Inspect the hydraulic fluid level in the hydraulic reservoir located between the AC drilling motors daily. Inspect the hydraulic filter located on the upper left AC drilling motor daily.

Inspection

Maintenance schedule

Hydraulic system oil lubrication schedule

Description	Frequency
Replace hydraulic system filter (P/N 114416-1)	Every 3 months
Perform hydraulic system oil analysis	Every 6 months
Replace hydraulic fluid	Yearly, or earlier based on oil analysis
Inspect hydraulic reservior bladder	Yearly
Replace hydraulic reservior bladder	Every 2 years

Daily inspections

Description
Check the condition of the hydraulic filter indicator
Check hydraulic fluid levels
Check for hydraulic fluid leaks
Check the condition of hydraulic hoses

Recommended hydraulic lubricants

	Oil Temperature Range	
	-15˚ to 75˚ C (5˚ to 167˚ F)	**-10˚ to 85˚ C (14˚ to 185˚ F)**
Manufacturer		
Castrol	Hyspin AWS-32	Hyspin AWS-46
Chevron	AW Hyd oil 32	AW Hyd oil 46
Exxon	Nuto H32	Nuto H46
Gulf	Harmony 32AW	Harmony 46AW
Mobil	DTE 24	DTE 25
Shell	Tellus 32	Tellus 46
Statoil	Hydraway HMA 32	Hydraway HMA 46
Texaco	Rando oil HD32	Rando oil HD46
Total	Azolla ZS 32	Azolla ZS 46
Union	Unax AW32	Unax AW46

Viscosity Index		
ISO Viscosity Grade	32	46

Inspection

Inspecting the hydraulic fluid level and filter

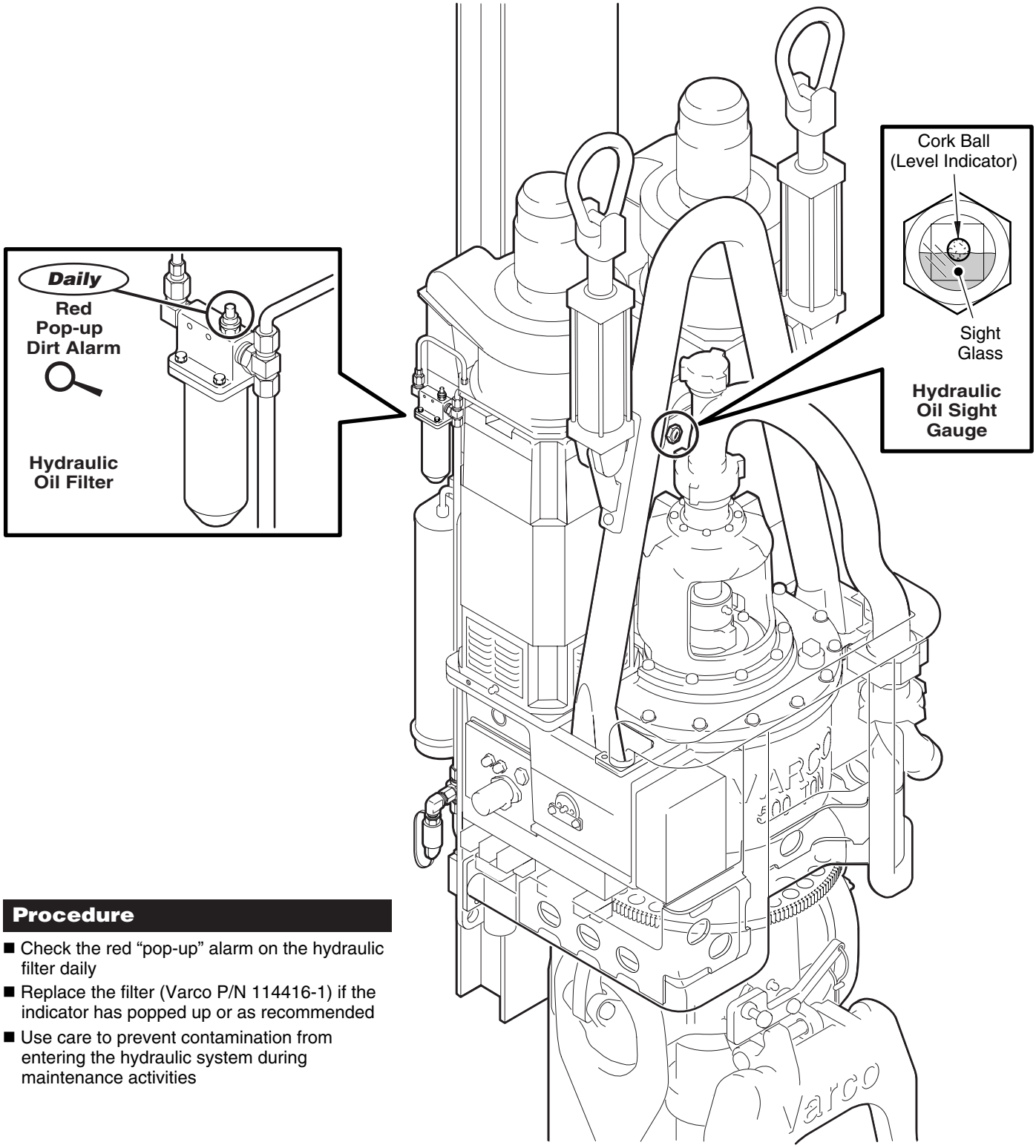

Procedure

- Check the red “pop-up” alarm on the hydraulic filter daily
- Replace the filter (Varco P/N 114416-1) if the indicator has popped up or as recommended
- Use care to prevent contamination from entering the hydraulic system during maintenance activities

Inspection

Adding the hydraulic fluid

Specifications

Reservoir Capacity	25 gal

Procedure

- Turn the Top Drive OFF
- Ensure that the area is clean prior to adding hydraulic fluid
- Remove dust plug from the male quick disconnect at the Top Drive hydraulic oil fill
- Remove dust plug from the female quick disconnect on the lubrication kit
- Connect the two fittings and pump fluid until the level reaches the middle of the sight glass as showm
- See Lube Schedule for specifications
- After adding fluid, replace the dust plugs

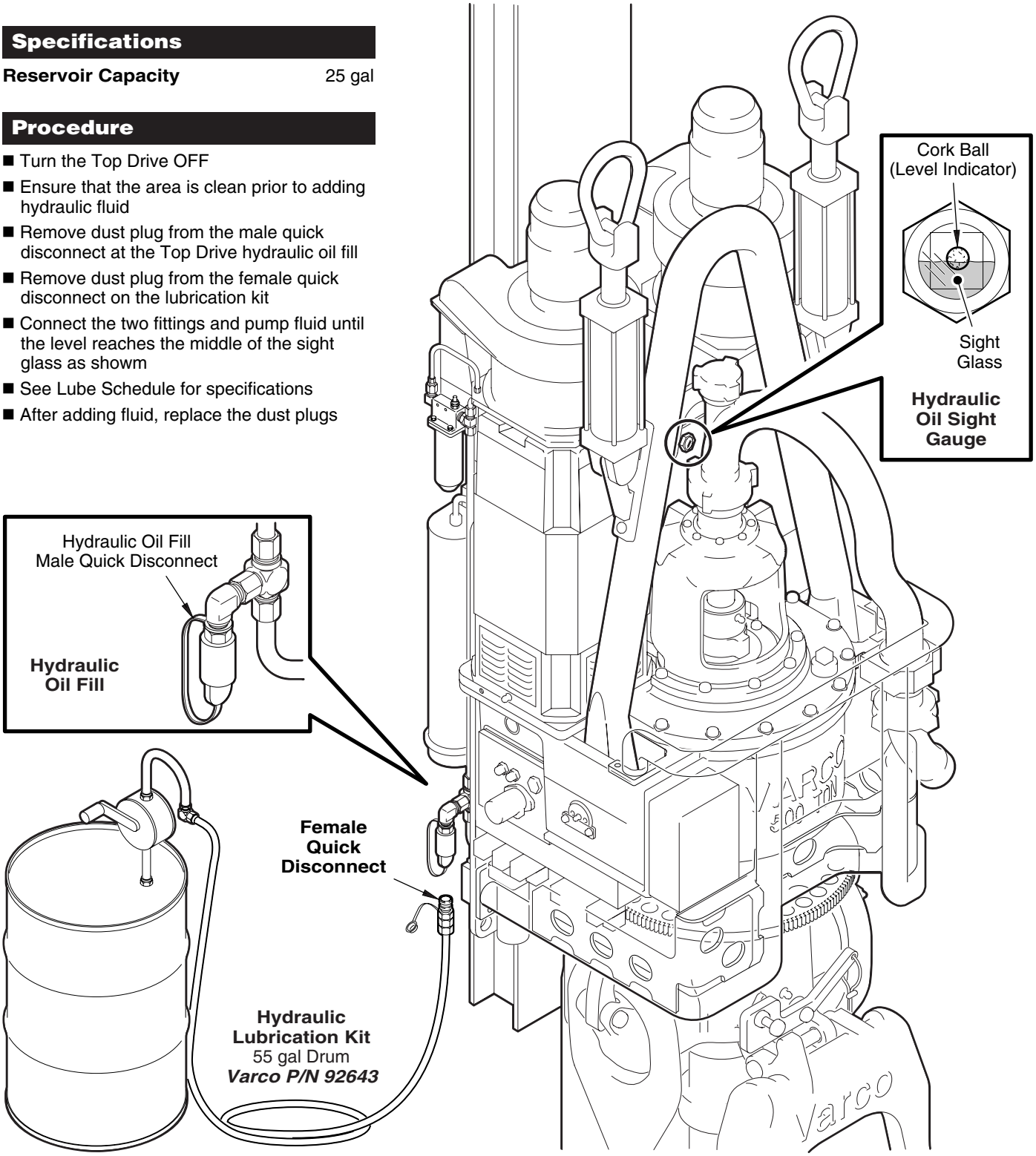

Inspection

Draining the hydraulic fluid

Precautions

- Hydraulic fluid may be hot
- Use care when opening the valve
- Avoid spills
- Holds 25 gallons

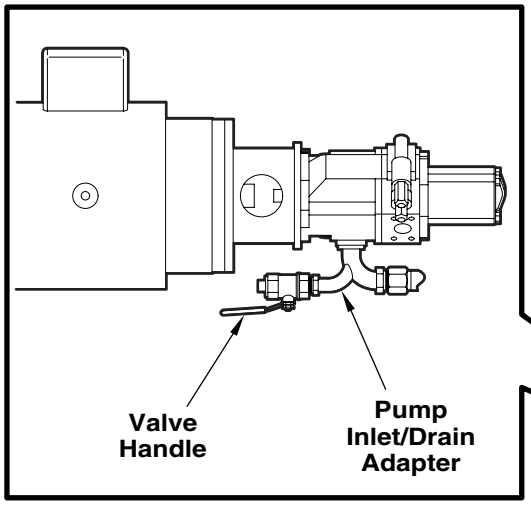

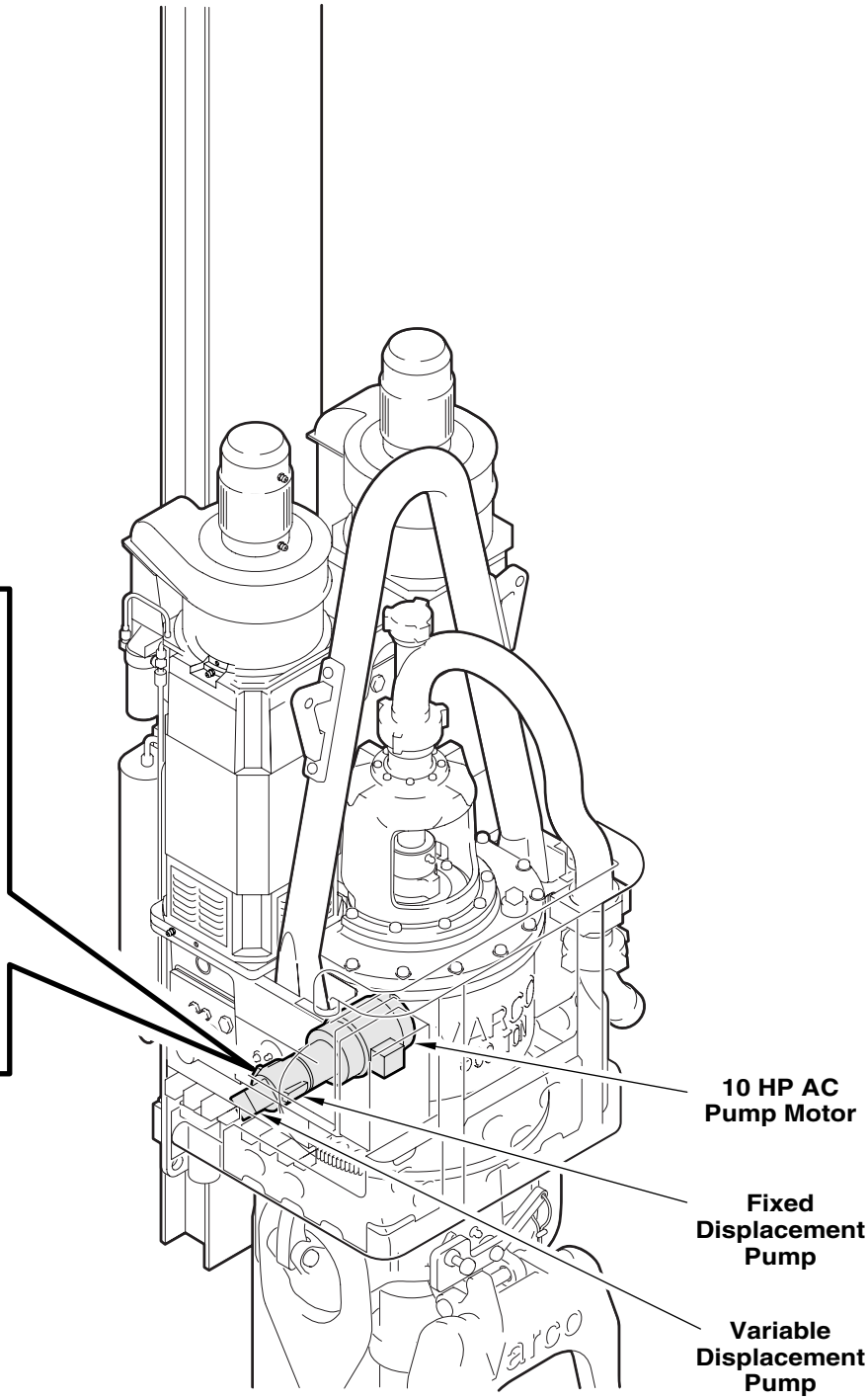

Procedure

- Isolate power to the pump motor
- Ensure that the valve is closed
- Remove the plug and attach a hose
- Open the valve and drain the fluid
- Close the valve and remove the hose
- Replace the plug

Inspection

Inspecting the hydraulic reservoir bladder (yearly)

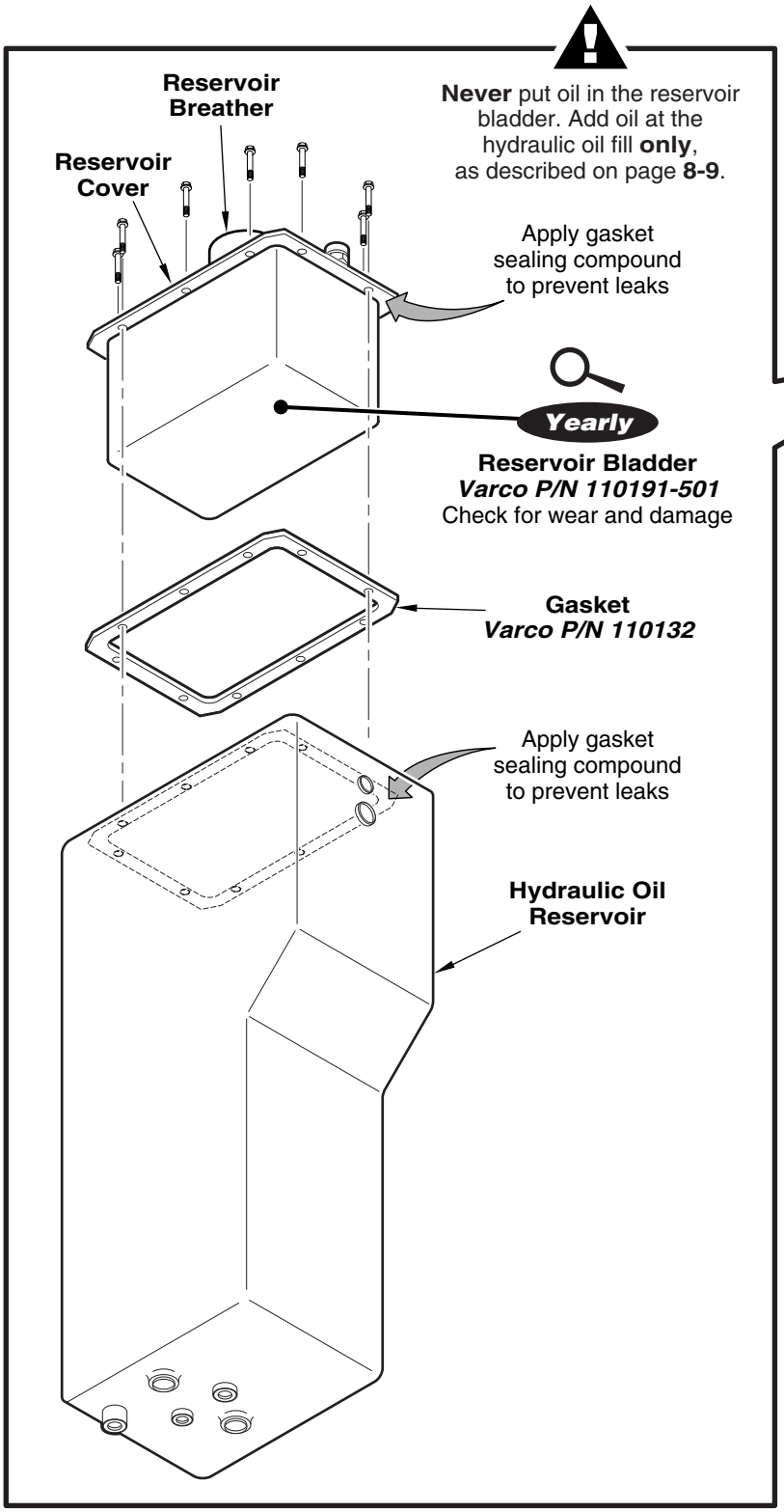

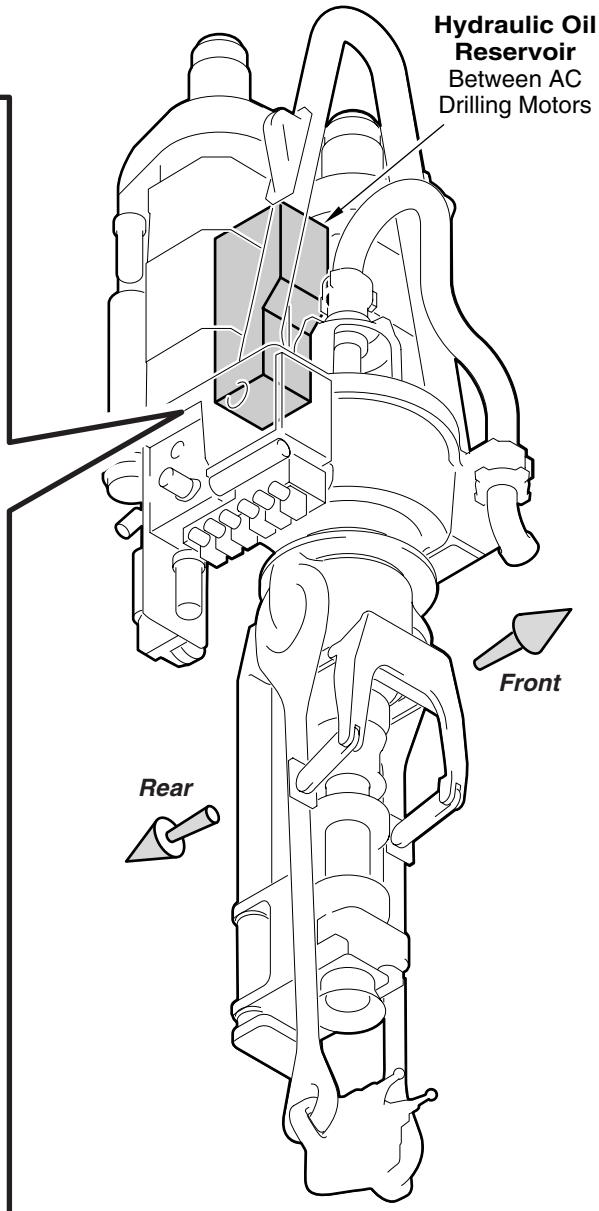

Procedure

- Drain hydraulic fluid and clean area before inspecting the reservoir bladder
- Remove the 10 cap screws and lock washers from the cover
- Remove cover with bladder attached
- Check the bladder yearly for wear or damage
- Replace the bladder every two years
- Replace the bladder if fluid is found inside or if fluid escapes the reservoir breather when the Top Drive is on its back

Inspection

Inspecting the heat exchanger

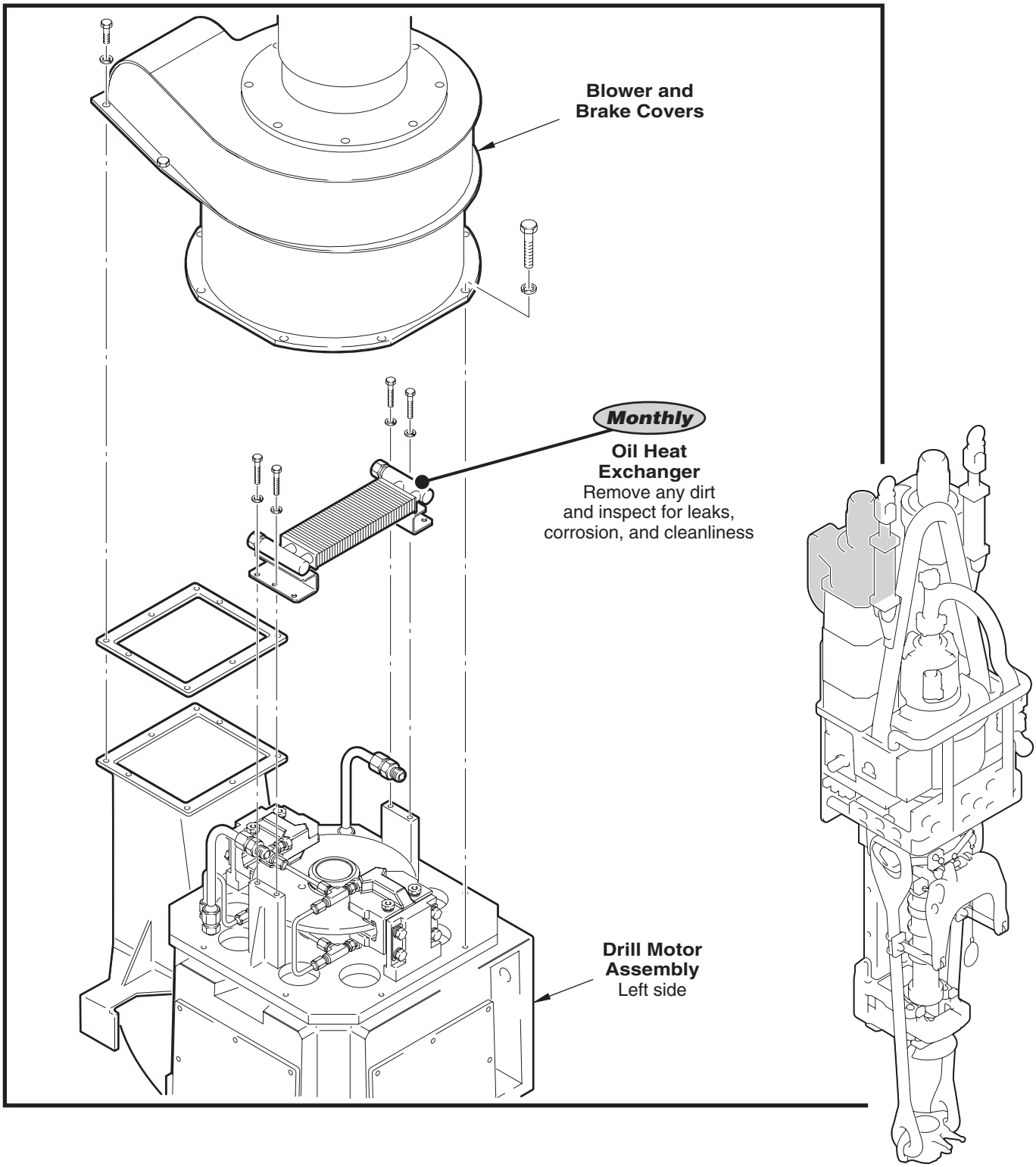

Inspection

Using the hydraulic system test ports

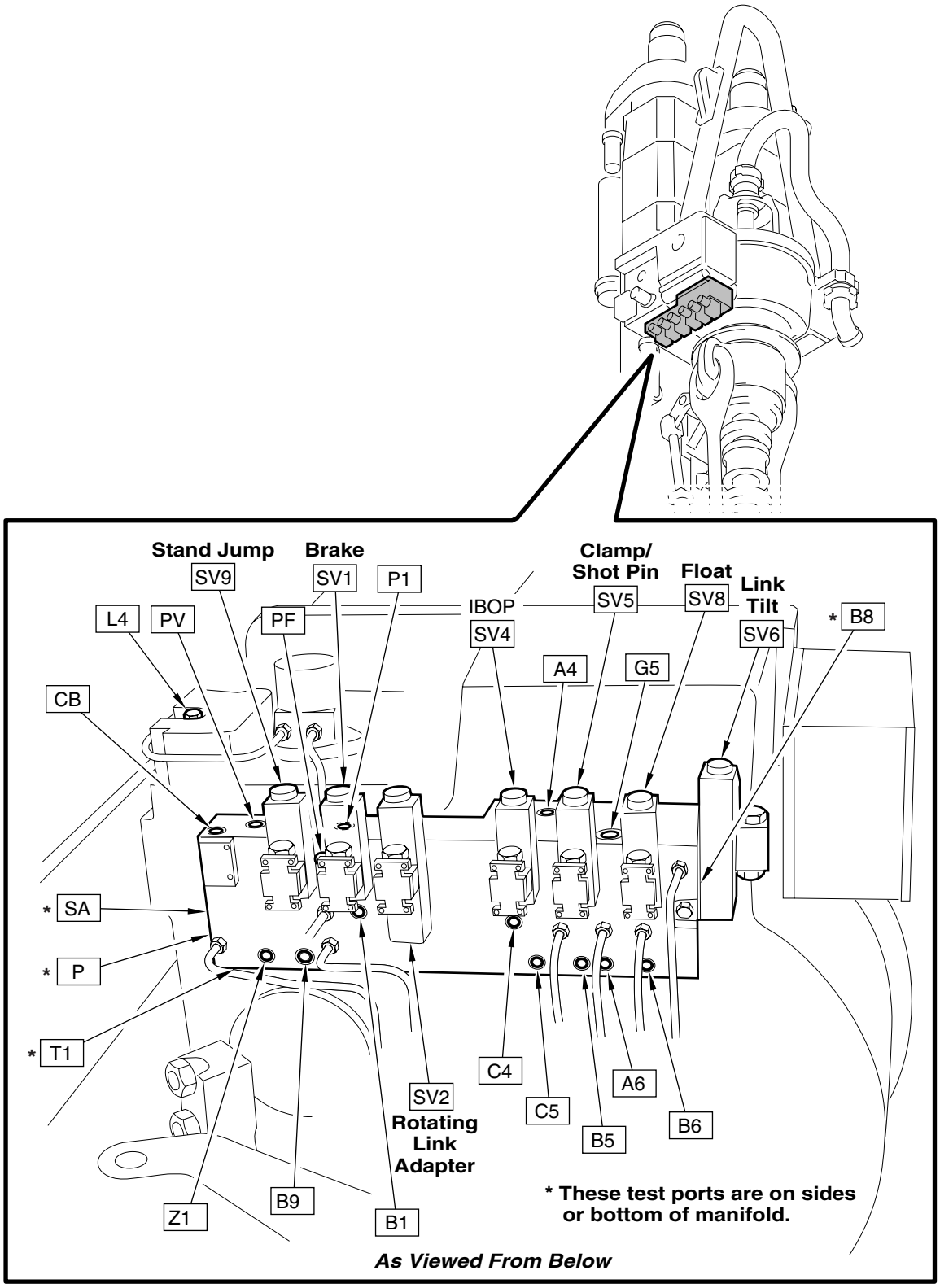

Inspection

Precharging the accumulators

Accumulator	Setting	Port
System Accumulator	(125-cubic inch displacement) 800 psi precharge	SA
Counterbalance Accumulator	(728-cubic inch displacement) 900 psi precharge	CB
Time-Delay Accumulator	(30-cubic inch displacement) 800 psi precharge	C4

Bleed the accumulator if the pressure is higher, or add nitrogen if the pressure is lower than specified above

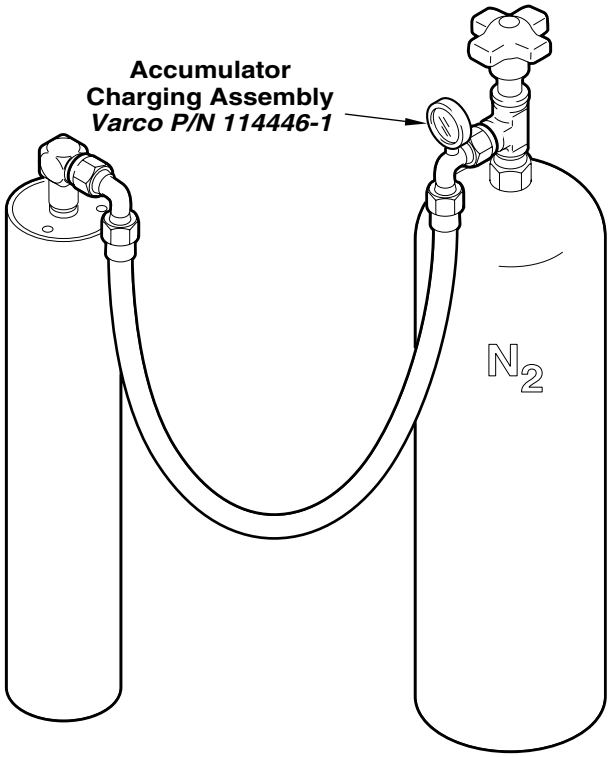

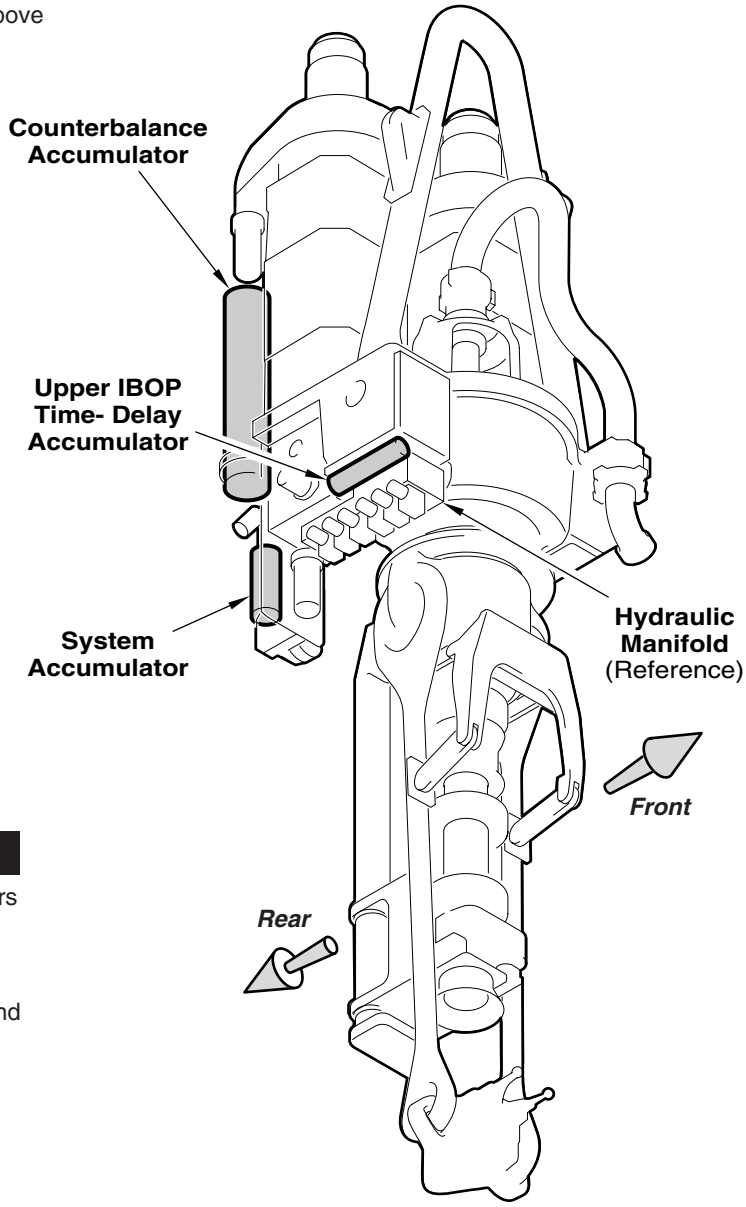

Procedure

- Disconnect the hydraulic lines to the accumulators and drain them of all hydraulic fluid
- With the hydraulic system shut down, and the counterbalance mode valve in the “shut down” position, test the hydraulic pressure at CB, SA and C4 on the hydraulic manifold, mounted to the transmission housing
- Verify that all three points measure 0 psi

Note that there is a time delay in pressure decay on port C4

- Test the precharge pressure on the following three nitrogen filled accumulators, using part number 114446-1

Inspection

Inspecting the IBOP timing circuit

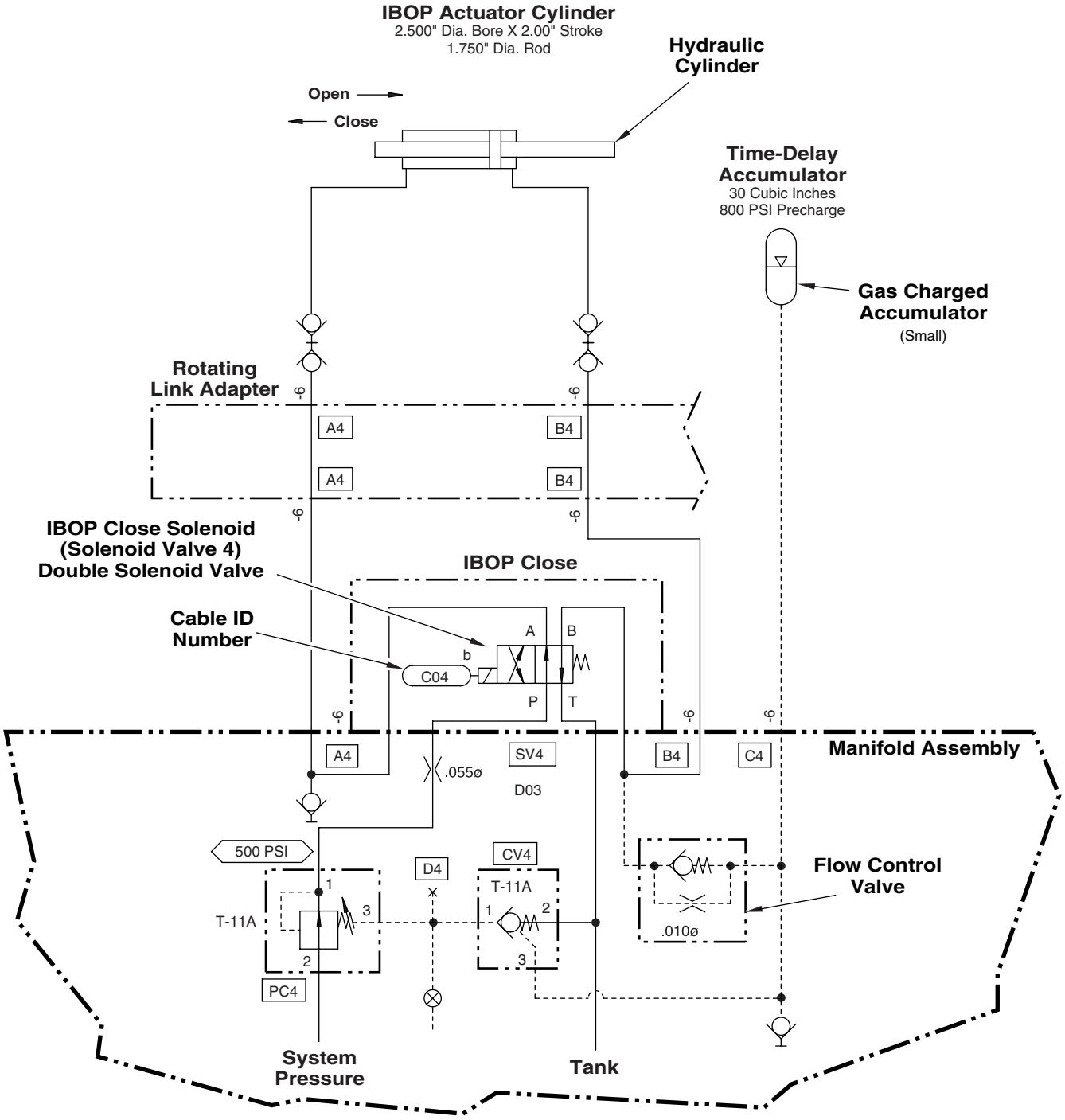

Inspection

Inspecting the IBOP and oil pressure switch

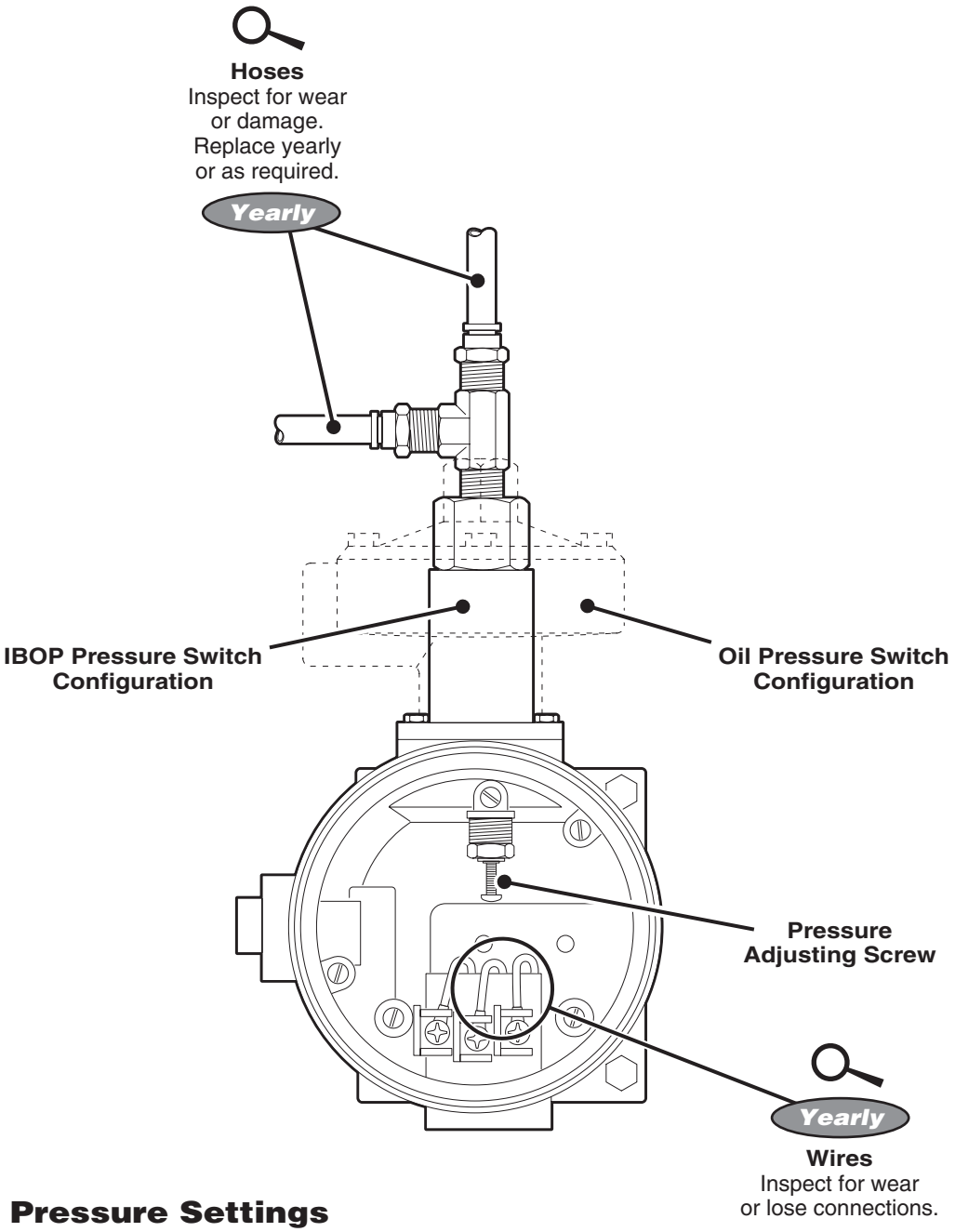

Switch Pressure Settings

Component	Setting
IBOP Pressure Switch	Factory preset at 1500 psi (102.0 BAR) rising
Oil Pressure Switch	Factory preset at $10.0^{+0}_{-1.0}$ psi decreasing

Setting up the circuits

Setting up the hydraulic pumps and unloading circuit

There are two pumps – a fixed displacement pump runs the transmission lubrication system and a variable displacement pump provides hydraulic flow to the hydraulic system.

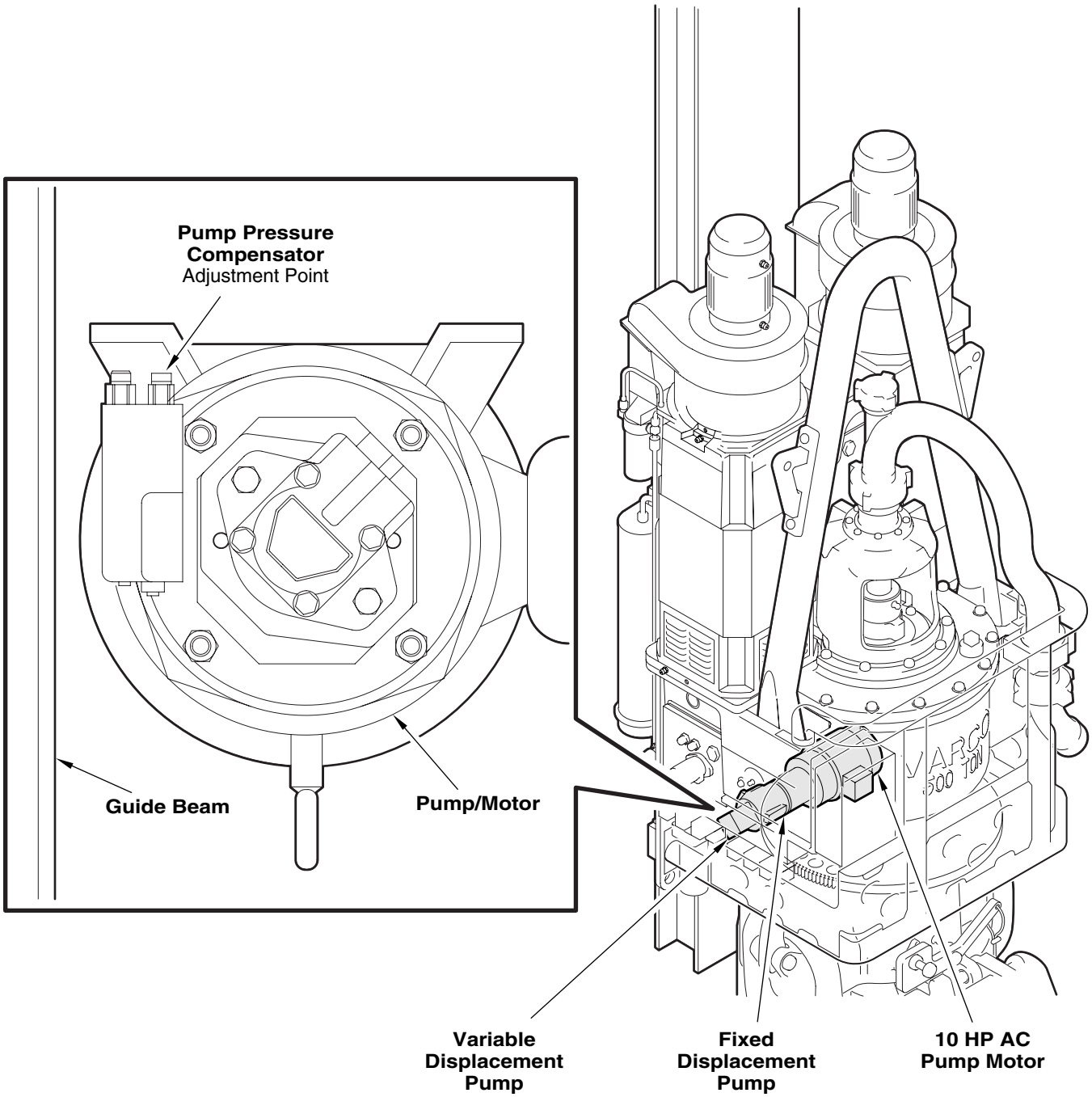

Setting up the circuits

Setting up the fixed displacement (lube) and variable displacement pumps

Make sure the Top Drive is properly filled with hydraulic fluid and lube oil before performing this procedure. Also make sure the Rig-Up/Shutdown valve is in the SHUTDOWN position.

1. Locate the tube connecting manifold port PF to the lubrication motor. Disconnect the tube at the manifold end, cap the tube and plug the PF port using steel fittings.
2. Set the relief valve RV1 for the variable displacement pump to a minimum setting, fully counterclockwise, which allows the hydraulic system to operate without building up pressure, and turn the motor off.
3. Set the relief valve RV2 to minimum pressure, fully counterclockwise.
4. Jog-start the electric motor to make sure the direction of rotation is correct (clockwise when looking into pump shaft/ electric motor fan). Correct as required.
5. Start the electric motor and allow both hydraulic pumps to circulate oil. Listen for unusual noises that would indicate cavitation; check for leaks.
6. Connect a gauge to test point PF. Increase the pressure by adjusting relief valve RV2 clockwise until the pressure increases to 400 psi at test point PF. Set the jam nut on RV2. A steel cap is installed over the adjustment screw to discourage unauthorized adjustment.

While adjusting valves, verify a linear relationship between turning the adjustment screw and observing the pressure change.

7. Turn off the electric motor. Reconnect the tube between manifold port PF and the lubrication motor.
8. Connect an ammeter to the electric motor. Note the full-load amps on the motor nameplate.
9. Restart the hydraulic system electric motor.
10. Set the counterbalance mode valve to the RUN position.
11. Adjust UV1, fully clockwise, to maximum pressure.

Setting up the circuits

Setting up the fixed displacement (lube) and variable displacement pumps

12. Connect a gauge to test point PV. Note the ammeter reading while RV1 is at minimum setting.
13. Raise the setting of relief valve RV1 from 0 psi to 1,500 psi at a steady rate. During the pressure rise, observe the ammeter. The motor current should rise to a maximum value at 800 psi, then drop off and begin to rise again. The point where the current drops is the pump pressure compensator setpoint.
14. Adjust relief valve RV1 to its minimum setting. If maximum motor current does not occur at 800 psi, adjust the pump pressure compensator as required.
15. Adjust relief valve RV1 again from 0 psi to 1,500 psi, and back to 0 psi to verify maximum motor current at 800 psi.
16. Connect a gauge to test point SA, and leave the gauge on PV.
17. Adjust relief valve RV1 to 2,200 psi and secure the jam nut.
18. Install steel cap over the adjustment screw to discourage unauthorized adjustment.
19. Adjust unloading valve UV1 counterclockwise until the pressure at PV drops off, then an additional two turns counterclockwise. The pressure cycles like a sawtooth wave.

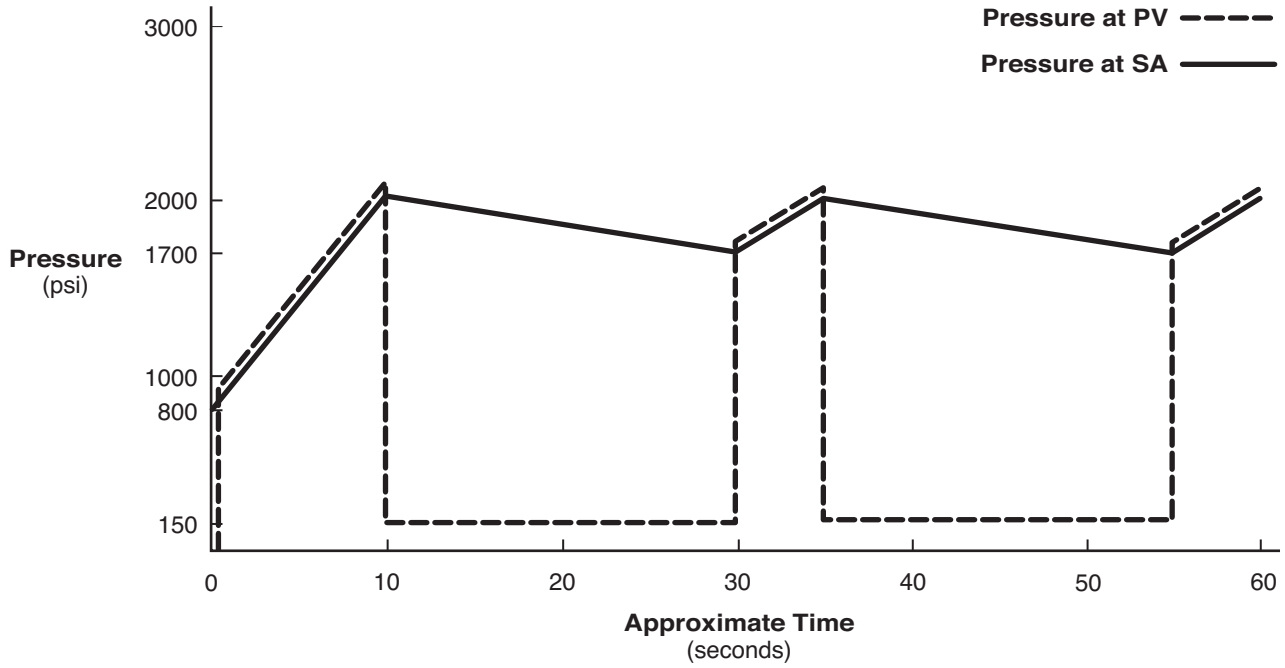

Setting up the circuits

Setting up the fixed displacement (lube) and variable displacement pumps

20. Observe the unloaded pressure at PV (about 0 psi) while SA reads about 2,000 psi. The pressure at SA decays until UV1 reloads. After reloading, the pressure rapidly rises to the unload pressure.

21. Observe several unload-reload cycles to determine the unload pressure.

22. Adjust the setting of UV1 as required to a 2,000 psi unload pressure.

Perform the adjustment with reasonable speed. The process takes no longer than two minutes. Taking longer increases the temperature of the hydraulic fluid.

23. Observe the cycle of loading and unloading of the relief valve. To verify the setting of UV1, note the difference in pump noise level between the loaded and unloaded condition.

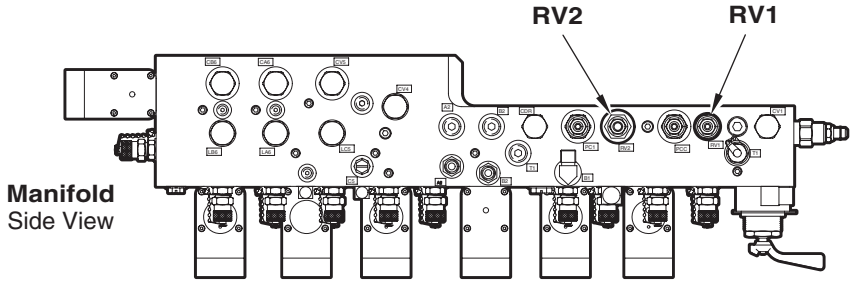

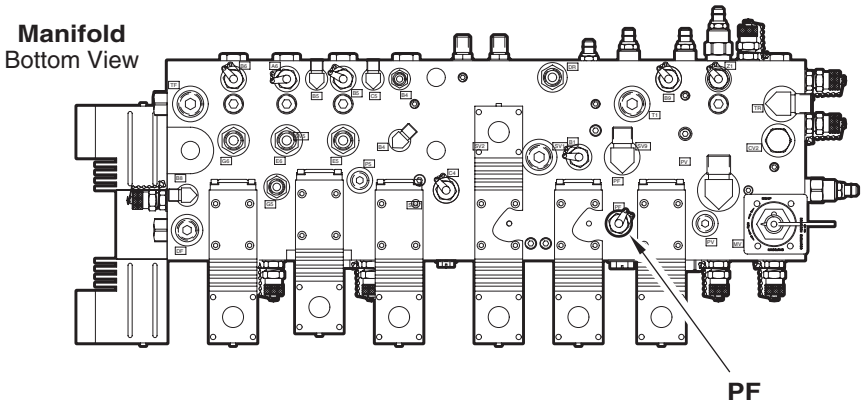

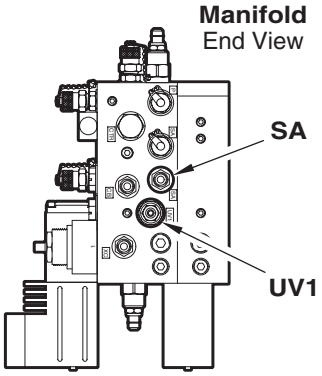

Setting up the circuits

Setting up the fixed displacement (lube) and variable displacement pumps

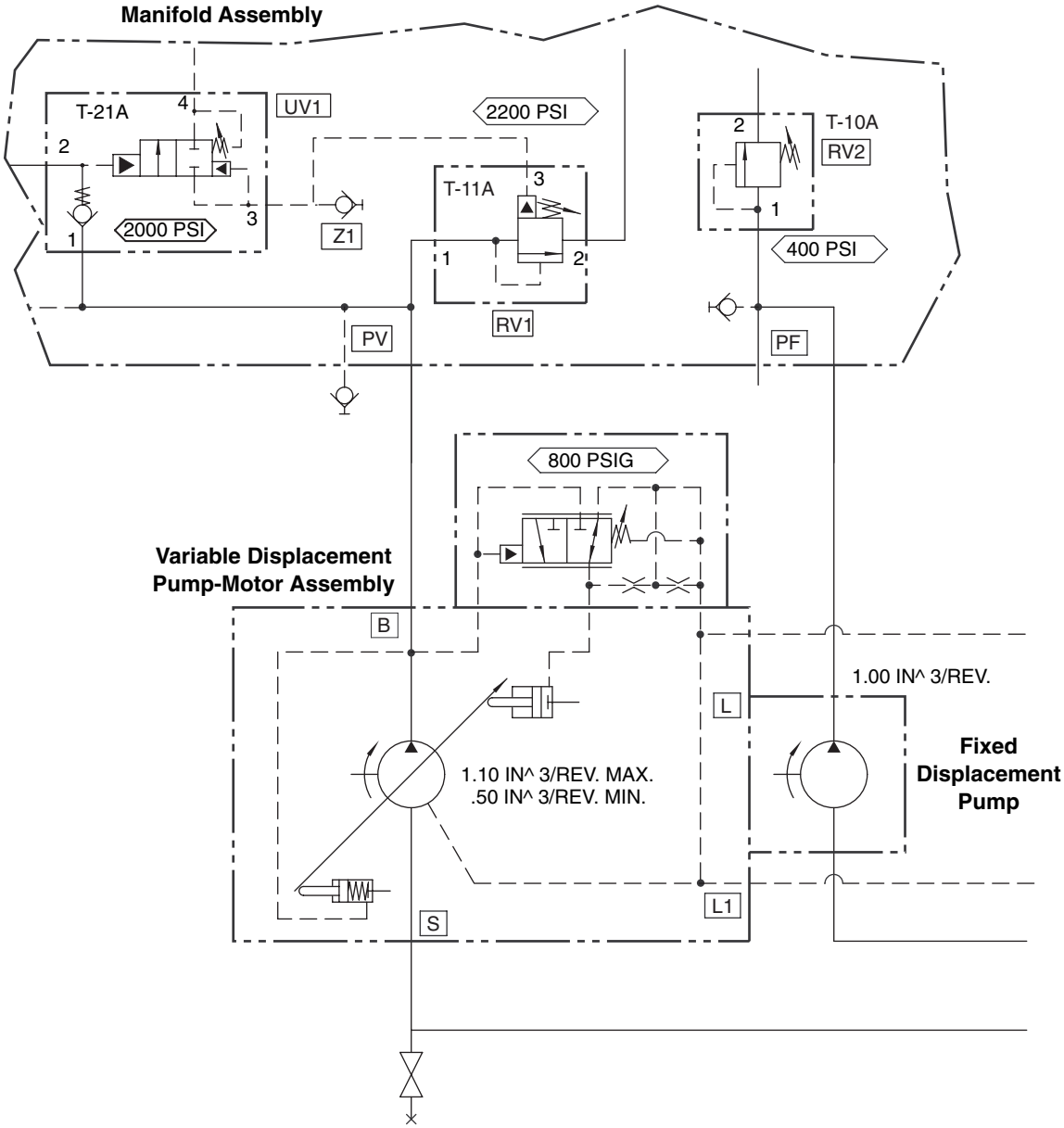

Setting up the circuits

Setting up the counterbalance circuit and stand-jump circuit

1. For the counterbalance circuit there are three adjustments:
   - ❑ Relief valve (on counterbalance cylinder)
   - ❑ PCC – operator set
   - ❑ SJR – operator set
2. To set the relief valve, make sure the pumps are operating.
3. Adjust pressure reducing valve PCC to the maximum setting, fully clockwise.
4. Connect a gauge to test port CB.
5. Adjust the cylinder-mounted relief valve to mid-scale to lower the pressure setting.
6. Increase the pressure clockwise using a 5/32 in. Allen wrench and 9/16 in. open-end wrench.
7. Observe the relationship of turning the relief valve adjustment clockwise to pressure increase.
8. When the relief valve reaches system pressure, turn the setting one full turn clockwise beyond the setting and set the jam nut.
9. Install a steel cover over the valve.
10. Adjust PCC to 1,200 psi.
11. Measure pressure at test port CB.
12. Prepare the hardware to attach the cylinder pear links to the hook.
13. Rotate the counterbalance mode valve from the RUN position to RIG-UP position. This causes the counterbalance cylinders to slowly extend.

Cylinders stroke to the end of stroke with the mode valve in the RUN position.

Setting up the circuits

Setting up the counterbalance circuit and stand-jump circuit

14. Once cylinders reach end of stroke, attach hardware to the pear links on the hook.
15. Rotate the counterbalance mode valve back to the RUN position.
16. Adjust PCC counterclockwise to raise the pressure at test port CB until the rail just begins to lift off of the hook.
17. Reduce the pressure slowly (25 psi) to allow the pressure to stabilize.
18. Rotate the counterbalance mode valve to the SHUTDOWN position to bleed down counterbalance cylinders and system accumulator before shipping or performing maintenance.
19. Adjust pressure reducing valve PCC counterclockwise until the bail rests on the hook. Note the pressure at CB.
20. Reduce PCC an additional 25 psi. The pressure at CB is about 1,600 psi.
21. Connect a gauge to test point B9. Activate the STAND JUMP mode on the drilling console. Adjust relief valve SJR until the bail lifts off the hook. The gauge at B9 should read about 190 psi.
22. Switch back to DRILL counterbalance mode and observe the pressure at test point CB.
23. Switch back to STAND JUMP mode and observe the pressure CB increase by 200 psi.

Setting up the circuits

Setting up the counterbalance circuit and stand-jump circuit

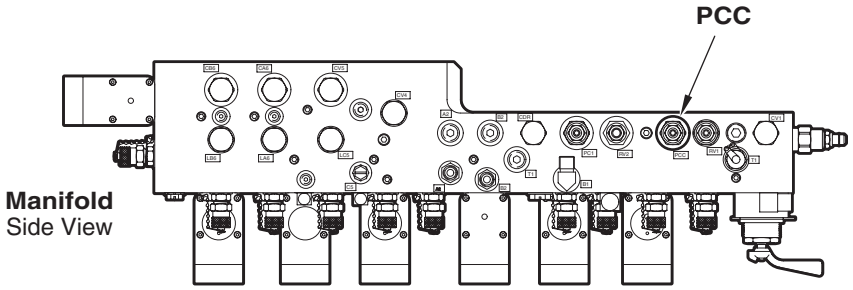

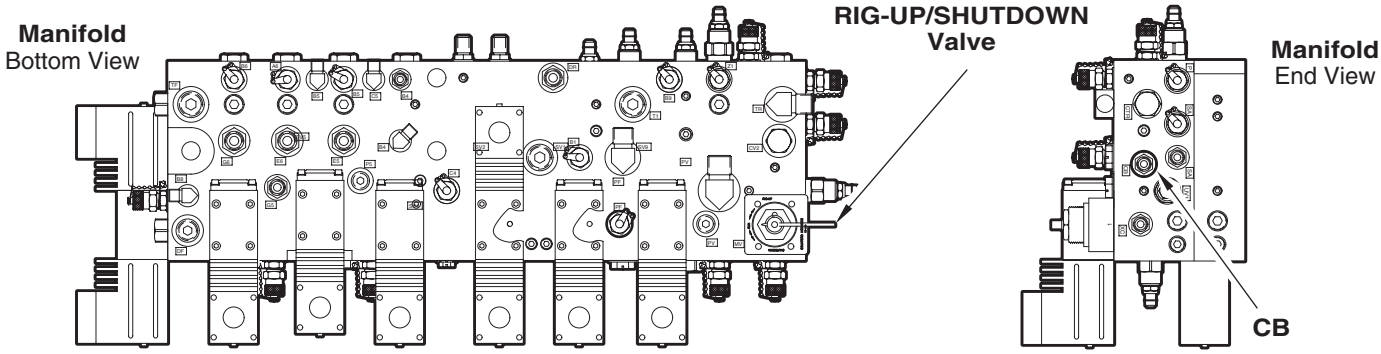

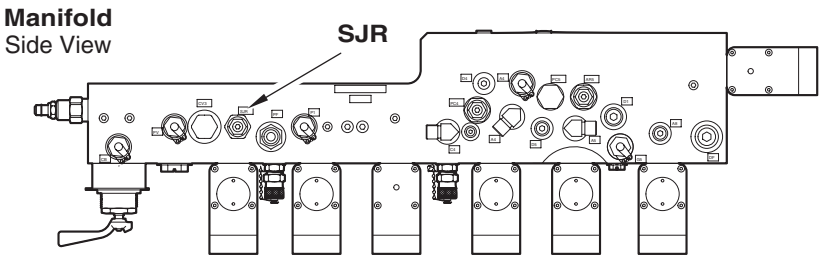

Setting up the circuits

Setting up the counterbalance circuit and stand-jump circuit

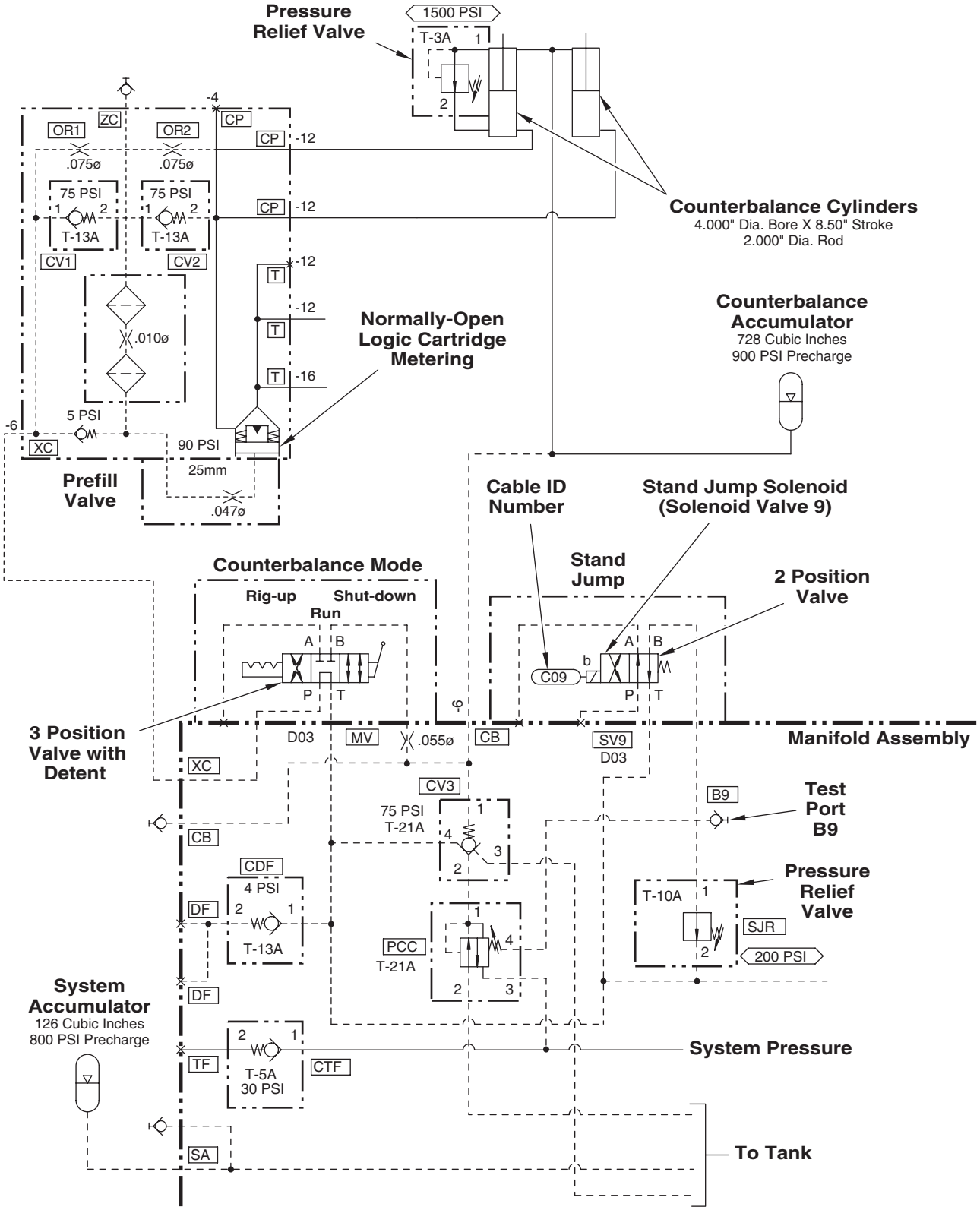

Setting up the circuits

Setting up the AC motor brake circuit

The AC drilling motor brakes are spring released and hydraulic pressure applied at 1,500 psi. The pressure reducing valve regulates the pressure to 1,500 psi. The solenoid valve operates to apply pressure, setting the brakes, or stop pressure to release the brakes.

To test the system, turn the auto brakes switch on the driller's console to the ON position. Attach a pressure gauge to B1 in the manifold. The pressure reading should be 1,500 psi. If the reading is not 1,500 psi, adjust the pressure control reducing valve PC 1 to 1,500. Turn the auto brakes switch to the OFF position. The pressure reading should be very low.

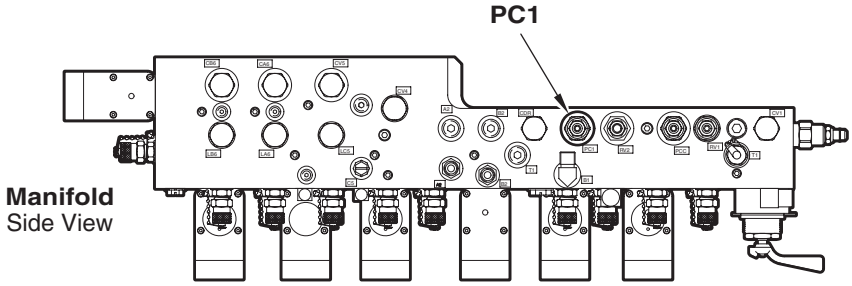

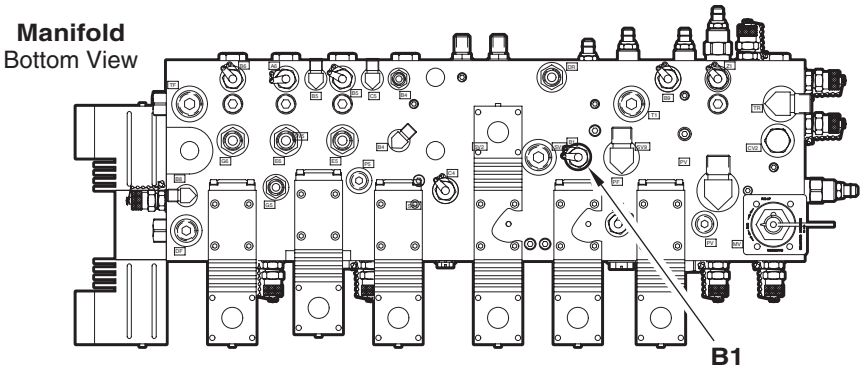

Setting up the circuits

Setting up the shot pin circuit

1. Set the adjustable relief valve near the body of the cylinder. The shot pin often misses the hole in the rotating gear. The force the shot pin exerts is limited until the pin engages a hole.

The electrical system jogs the rotating head until the pin engages a hole.

2. To limit the amount of force, you set the valve by operating solenoid valve SV5 manually, forcing the pin to stop on the face of the gear.
3. When the pin stalls out, measure the pressure at B5. Set the relief valve pressure to 400 psi.
4. Tighten the jam nut on the relief valve.
5. At rest, the SV5 valve is de-energized.
6. Test the pressure at C5. Adjust reducing valve AR5 to 1,000 psi.

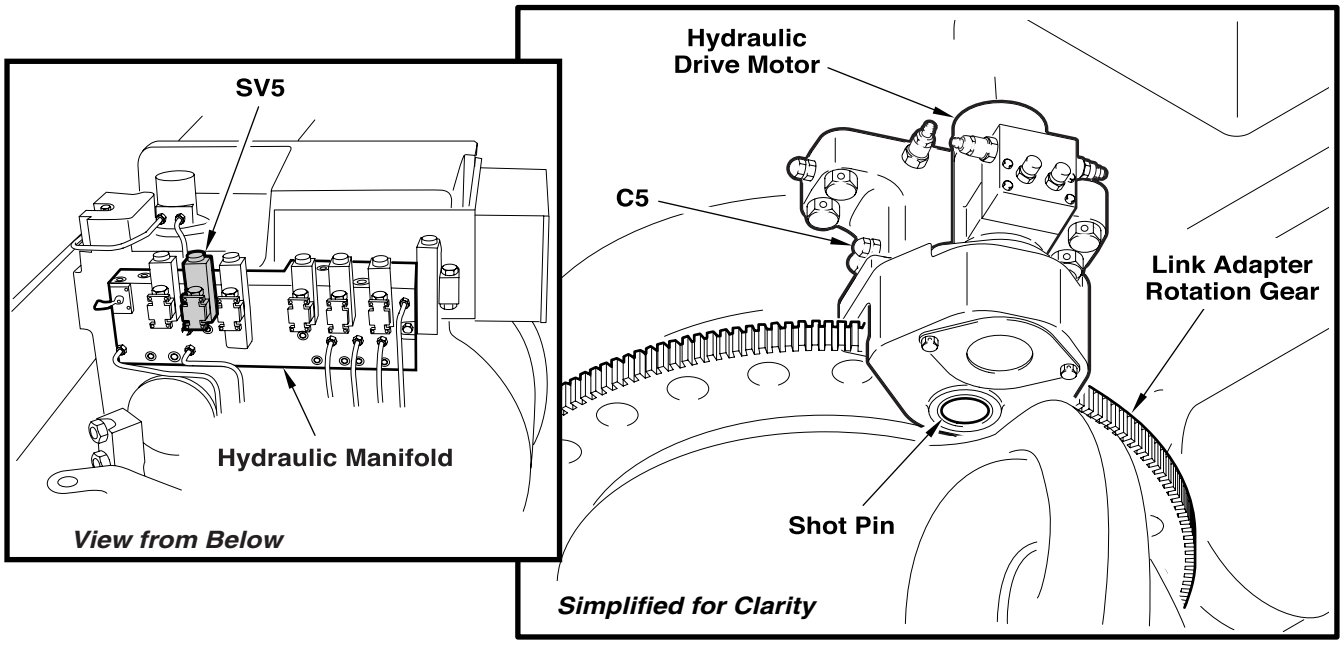

Setting up the circuits

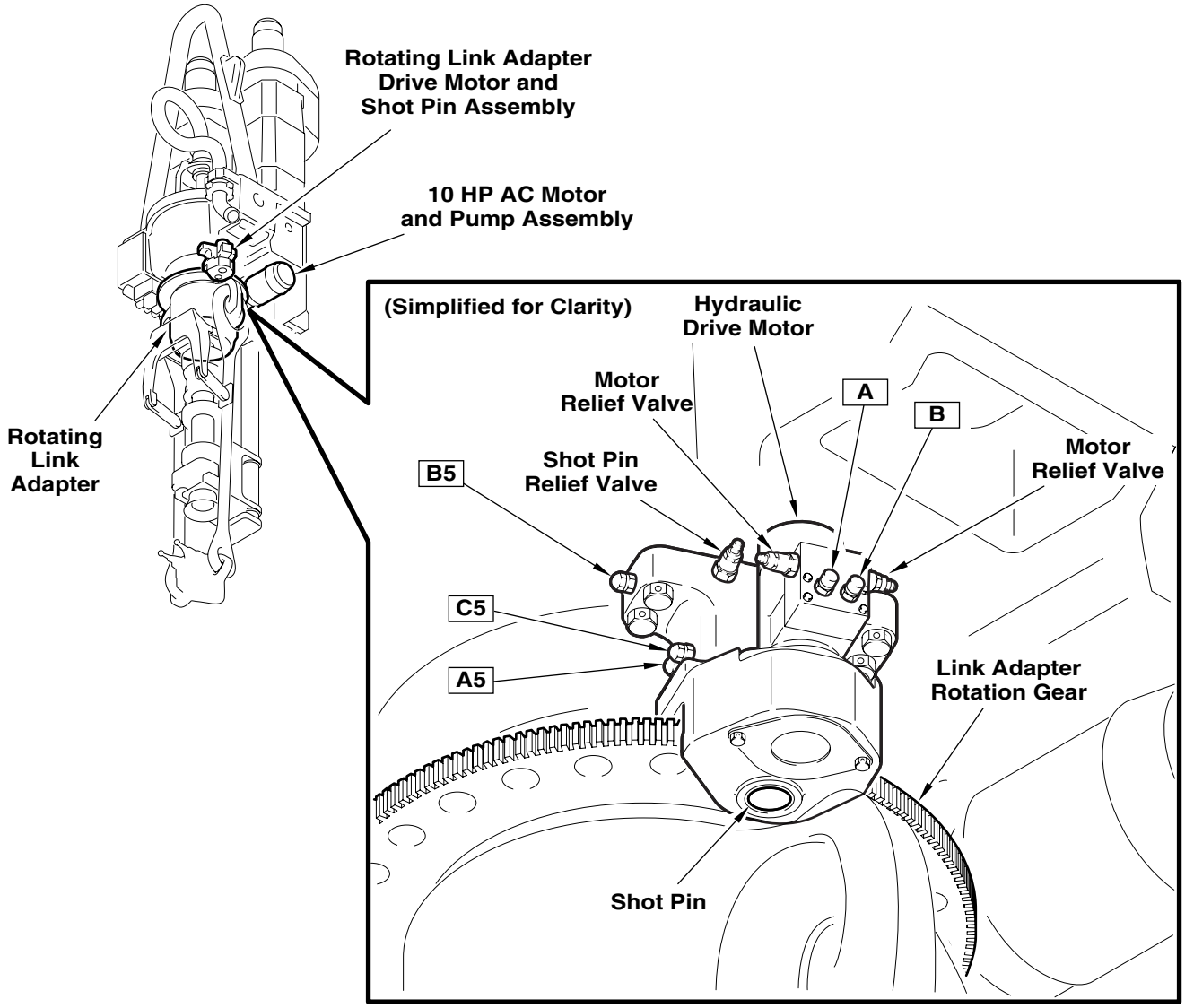

Setting up the circuits

Setting up the link tilt cylinder circuit

1. There is nothing to adjust on the manifold for the link tilt circuit.
2. Adjust the four load holding valves in pairs – the upper pair and lower pair. Adjust all four counterbalance valves fully clockwise, then one turn counterclockwise.

If the valves are not adjusted correctly, link tilt operation is not synchronized.

3. The correct pressure setting is 1,500 psi. The procedure is the same for both valves. Adjust the valves one at a time.
4. There are two test points on the link tilt cylinder manifold.
5. From the driller's console, move the link tilt to go to the mousehole position.
6. The cylinders go to full extension and the pressure at the test port C1 is 2,000 psi.
7. Command the link tilt to the OFF position and observe the pressure decay at C1. This decayed pressure is the setpoint of the counterbalance valve.
8. Raise the valve setpoint by turning the adjusting screw 1/4 turn counterclockwise.
9. Repeat steps 6 and 7 until the decayed pressure is 1,500 psi.

This is an iterative process. Continue to set the driller's console control to the mousehole position and OFF, taking present and decayed pressure readings.

Turning the counterbalance valve counterclockwise increases the pressure.

10. Command the link tilt to the DRILL position and repeat the procedure above, using test port C2 to set the counterbalance valve on the DRILL side.

Setting up the circuits

Setting up the rotating link adapter hydraulic motor relief circuit

1. Set the relief valves mounted on rotation motor.
2. Operate the clamp. The shot pin must go through the hole, which locks up the gear.
3. Turn the manual override on the SV2-rotation circuit to drive the head in the counterclockwise direction. Test the pressure at A and adjust the relief valve to 1,700 psi.
4. Turn the manual override on the SV2-rotation circuit to drive the rotating head in the clockwise direction and test the pressure at B. Adjust the relief valve to 1,700 psi.

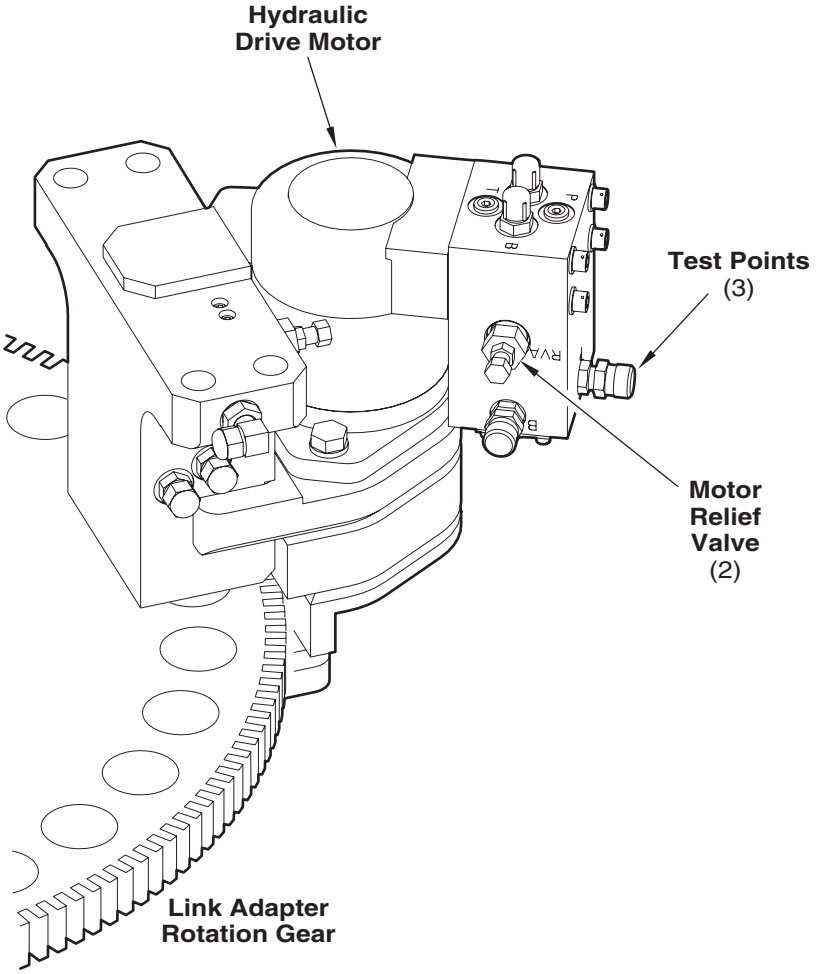

Troubleshooting

Troubleshooting the HPU and reservoir bladder

Problem	Probable cause	Remedy
Hydraulic system overheating	Relief valves RV1 and RV2 out of adjustment.	Test pressures and adjust relief valves.
	Unloading valve is not working.	Test and adjust UV1 or replace unloading valve.
	Counterbalance mode valve left in shut down position too long and pressure bleeds down.	Check system pressure.
	No precharge in system accumulator.	Charge system accumulator.
Hydraulic components do not operate.	System pressure is down.	First make sure RIG-UP/SHUTDOWN valve is in the correct position. Test pumps and motors. Test relief valve pressures. Adjust as required. Check for leaks, loose fittings, loose cylinders, worn hoses, fluid levels and seals.
	Piston pump is not working.	Replace the piston pump.
	Flexible coupling is damaged.	Replace the flexible coupling.
	Lubrication pump is not working.	Replace the lubrication pump.
	Pressure at UV1 is too low.	Adjust pressure at UV1.
	Pumps are rotating in the wrong direction.	Inspect hydraulic connections and correct rotation.
	Suction valve closed.	Open suction valve.
	Low oil level in reservoir.	Fill hydraulic reservoir.

Troubleshooting

HPU and reservoir bladder schematic diagram

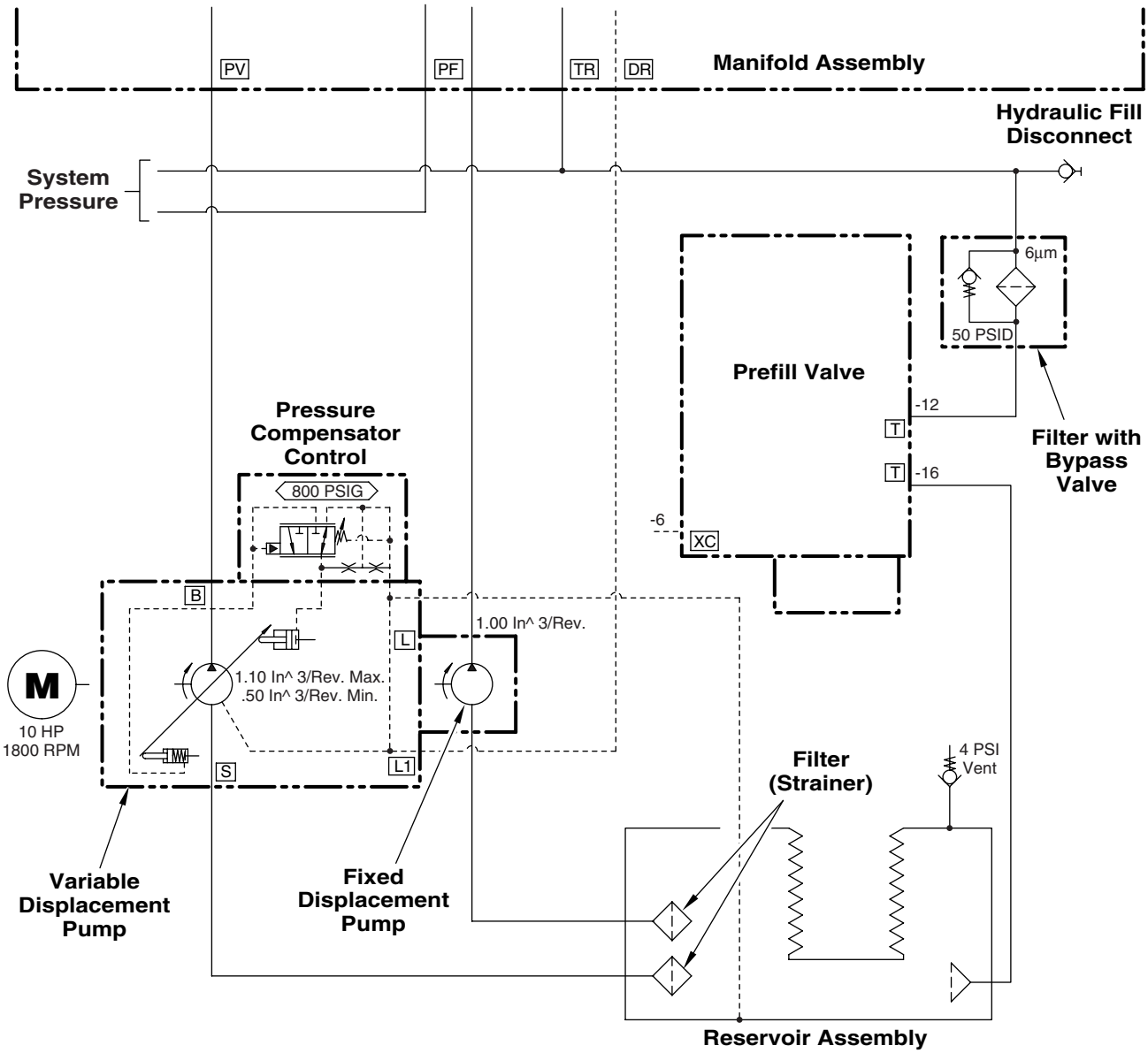

Troubleshooting

Troubleshooting the counterbalance and stand jump

The accumulator, with precharge pressure of 900 psi, along with check valve CV3, maintains a hydraulic pressure.

A three-position manually operated valve controls counterbalance operation for rig-up, run, and shut down modes. In the rig-up mode, system pressure is applied to XC and the prefill valve, causing both cylinders to extend. When the cylinders extend, you make up the mechanical connection to the bail. In the run mode, for counterbalance operation, approximately 1,600 psi is needed at the counterbalance cylinders to lift the TDS-11SA off the hook.

The optional stand jump feature is controlled by solenoid valve SV9. With the counterbalance in the run mode and the stand jump switch on, additional pressure of approximately 300 psi is applied to over the normal counterbalance pressure to lift the TDS-11SA and drill string off the hook.

In the shutdown mode, the hydraulic system bleeds down the system accumulator and the counterbalance accumulator pressure.

Counterbalance testing

For the counterbalance operation, a lift of approximately 30,000 lb is achieved with a pressure of 1600 psi at CB. Perform the following steps to adjust the force:

1. Set the counterbalance mode valve on the bottom of the manifold to the RUN mode. Set the pressure control valve PCC to the minimum setting (fully counterclockwise).
2. Test the pressure at port B9. There should be a 0 psi reading.
3. Test the pressure at port CB. Observe the position of the top drive on the hook.
4. Adjust the pressure at pressure control valve PCC clockwise, observing pressure at CB, until the top drive just lifts off the hook. Back off the pressure 25 psi, as the top drive rests on the hook.

Troubleshooting

Stand jump testing

For the optional stand jump feature, a lift of about 33,000 lb is achieved with a pressure of approximately 1800 psi at CB. The additional 300 psi pressure over the normal counterbalance pressure is provided by energizing the stand jump solenoid valve SV9. Perform the following steps to adjust the pressure:

1. Set the counterbalance mode switch to RUN and engage the stand jump switch. Test the pressure at port CB and B9. Adjust relief valve SJR fully counterclockwise to the minimum setting.
2. Slowly increase the pressure at CB by adjusting relief valve SJR clockwise until the bail lifts off the hook with a stand of pipe in the elevator.

Adjust relief valve SJR slowly to allow pressure at CB to stabilize.

Troubleshooting

Problem	Probable cause	Remedy
Counterbalance does not function.	Cylinder damaged. Seal leaks.	Inspect cylinder and repair or replace seal.
	No hydraulic pressure.	Test pressure and ajust pressure reducing valve.
	Solenoid valve SV9 is not operating.	Test electrical and hydraulic operation. Replace or repair as applicable.
	PCC is not operating.	Replace the valve.
	Relief valve is not operating.	Replace the valve.
	Precharge on the accumulator is low.	Charge the accumulator.
Stand jump does not function.	Cylinder damaged. Seal leaks.	Inspect cylinder and repair or replace seal.
	No hydraulic pressure.	Test pressure and adjust pressure reducing valve.
	Solenoid valve SV9 is not operating.	Test electrical and hydraulic operation. Replace or repair as applicable.
	PCC is not operating.	Replace the valve.
	Relief valve is not operating.	Replace the valve.
	Precharge on the accumulator is low.	Charge the accumulator.

Troubleshooting

Counterbalance and stand jump schematic diagram

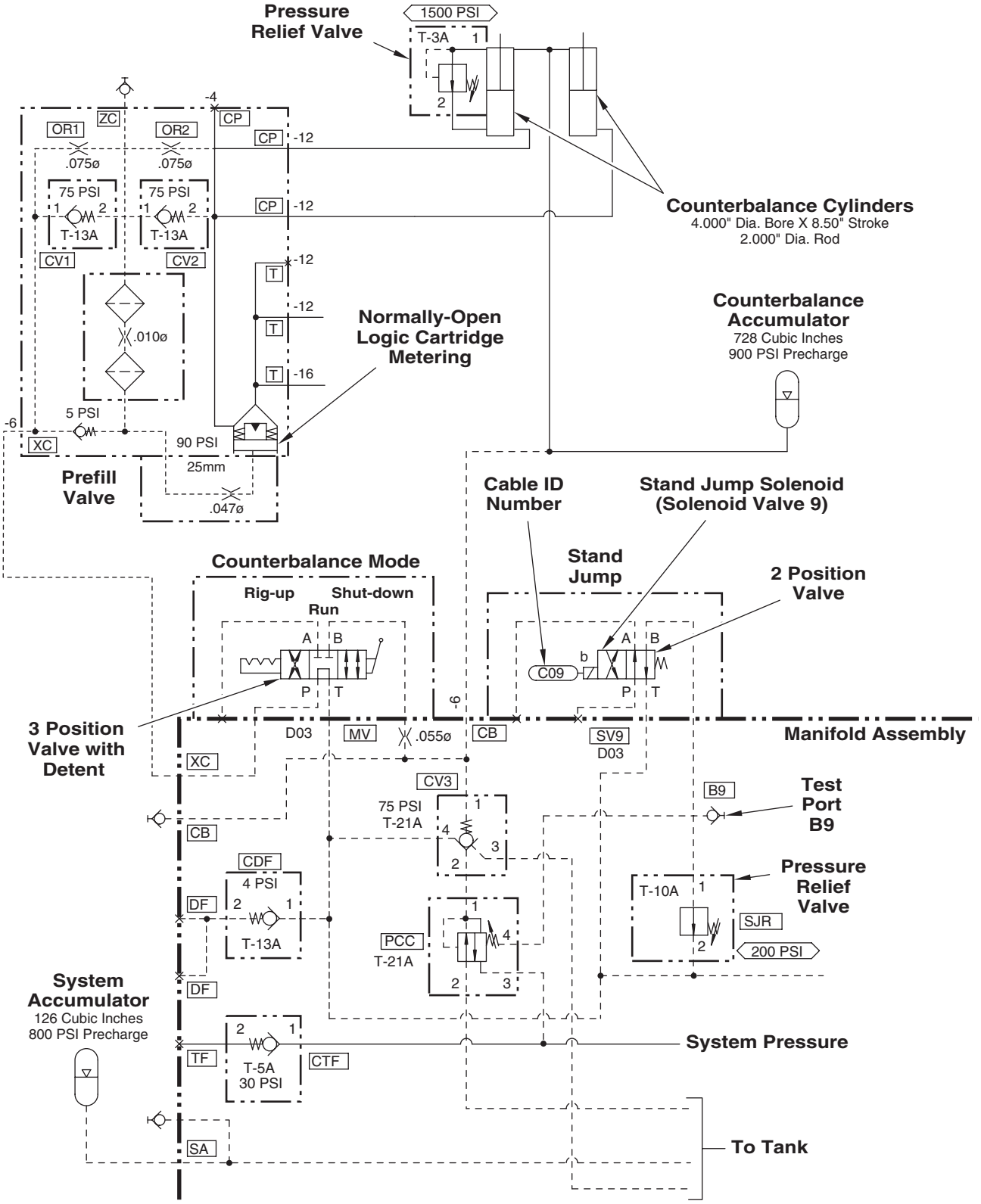

Troubleshooting

Troubleshooting the brakes

Problem	Probable cause	Remedy
Brake does not release.	Directional valve is stuck.	Test the valve and replace if necessary.
Brake releases but still drags.	Check valve is blocked or tube is pinched.	Replace the check valve or tube as required.
	Mechanical problems with brakes.	Repair brake mechanism.
Brakes do not engage or slip.	Hydraulic oil on brake pads.	Check for hydraulic leaks and repair.
	Pressure is not 1,500 psi or does not rise crisply to 1,500 psi.	Reducing valve is plugged or needs to be adjusted or replaced.
	Directional valve is stuck (check pressure at B1).	Replace valve or check electrical signal.
Delay in brakes actuating after console switch is turned on.	Hydraulic oil is contaminated.	Replace hydraulic oil.
	Pressured reducing valve is faulty.	Replace valve.

Brake circuit schematic diagram

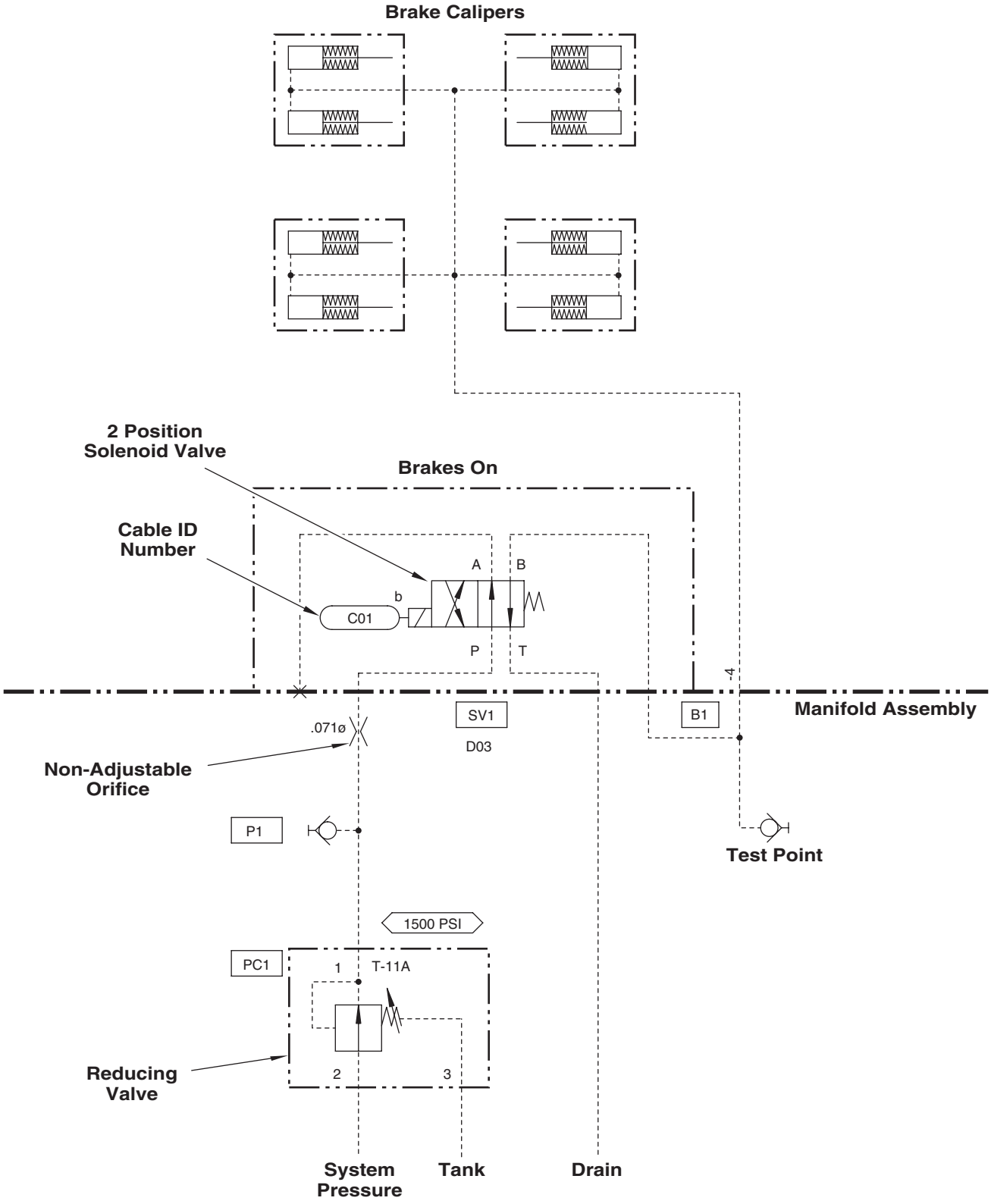

Troubleshooting

Troubleshooting the shot pin cylinder and clamp cylinder

Problem	Probable cause	Remedy
Shot pin does not engage.	Solenoid valve is not operating or relief valve is not adjusted.	Check electrical actuation and test pressure. Adjust as required.
	Abnormal pressure change at B5 and C5 indicates valve problem.	Replace directional control valve.
	Normal pressure change indicates plumbing or shot pin cylinder are faulty.	Repair plumbing or shot pin cylinder.
Shot pin applies excessive force to rotating head gear.	Relief valve is not operating or out of adjustment.	Test pressures and adjust as required.
Clamp cylinder does not actuate.	No pressure or reduced pressure at the cylinder.	Test pressures and adjust and repair as required.
	Cylinder is damaged.	Inspect cylinder and repair or replace.
	To provide high pressure to the clamp circuit, pressure at C5 must be 2,000 psi and G5 must be less than 100 psi. If this condition is met, pressure at CP should increase from less than 100 psi to higher than 2,000 psi. If not, check the plumbing, rotating link adapter, and clamp cylinder.	Repair plumbing, rotating head, or clamp cylinder.
	While clamping, pressure at CR should be 2.7 times the pressure at CP. When the dies contact the pipe, pressure at CR should be less than 100 psi. If the pressure does not fade, check valve CNEC for contamination.	Clean or repair CNEC valve.
Shot pin engages but clamp cylinder does not activate.	Control valve not operating.	Check pressure at C5. Replace valve CV5 if required or the regenerate manifold.

Troubleshooting

Shot pin cylinder and clamp cylinder schematic diagram

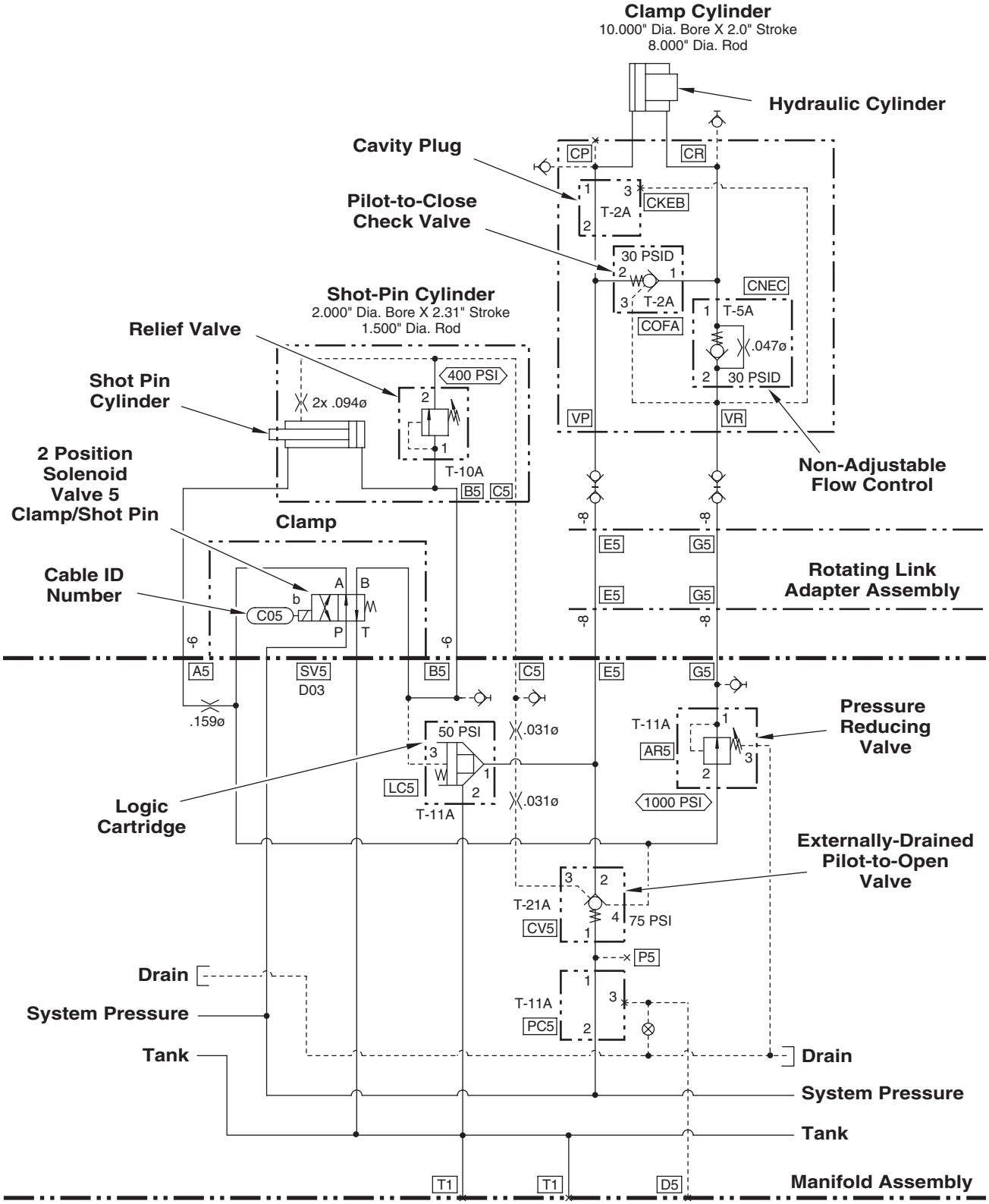

Troubleshooting

Troubleshooting the link tilt cylinders

Problem	Probable cause	Remedy
Drill pipe elevator does not reach mouse hole/ derrickman position.	Link clamp incorrectly adjusted.	Readjust
Links drift when valve is released.	Pressure at B8 does not decay to less than 100 psi.	Replace the pilot to open check valve.
	Pilot to open check valve is stuck open or contaminated.	Replace the pilot to open check valve.
	Faulty cylinder seal.	Replace the seal.
	Load holding relief valves are out of adjustment, stuck open, or contaminated.	Adjust or replace the load holding relief valve.
Drill pipe elevator does not float back to center position.	Use manual override. If the link tilts, the problem is electrical. If the links do not tilt, the problem is hydraulic.	Test the solenoid and connectors. Test the hydraulic system.
Link tilt does not tilt.	Solenoid valve is not shifting.	Check electrical continuity.

Troubleshooting

Link tilt cylinders schematic diagram

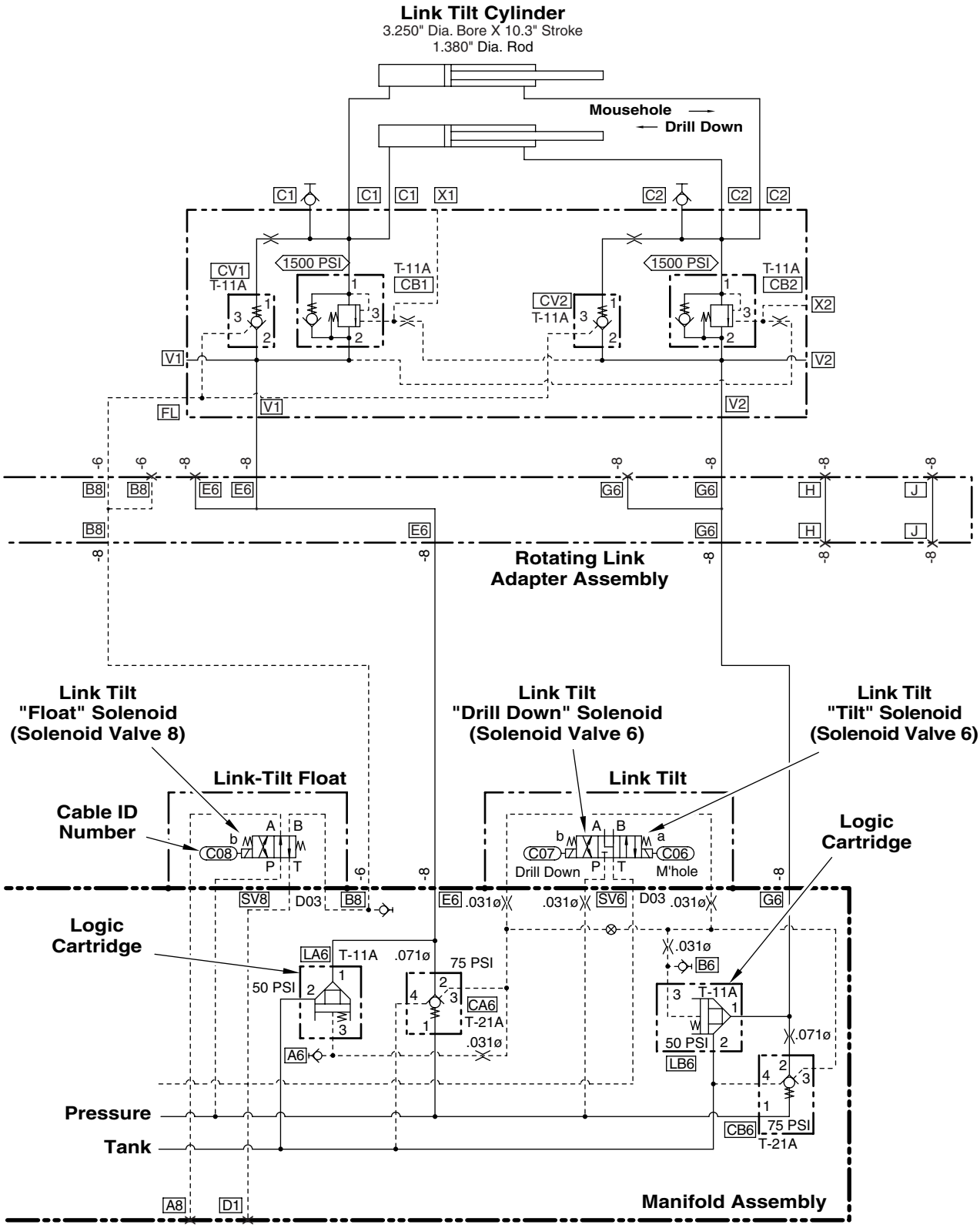

Troubleshooting

Troubleshooting the gearbox lubrication hydraulic system

Problem	Probable cause	Remedy
Oil leaking from lower seal.	Worn oil seals.	Replace seals.
Oil leaking from upper bearing retainer.	Worn oil seals.	Replace seals.
Gearbox oil temperature (less than 230˚F).	Oil level too low or too high.	Adjust oil level to middle of sight glass.
	Incorrect lubricant used.	Check recommended lubricants chart and replace as needed.
	Damaged gears or bearings.	Repair or replace as needed.
Oil pump loss alarm is on.	Oil level is too low. Oil overheated.	Add oil.
	Oil pressure switch is out of adjustment.	Adjust per page 8-16.
	Gear spray nozzle missing.	Replace spray nozzle.
	Excessive oil viscosity.	Lower oil viscosity.
	Faulty motor. Intermittent operation.	Replace motor.
	Oil pump hydraulic motor failure.	Replace motor.
	Broken lube pump adapter plate spline.	Replace adapter plate spline.
	Faulty fixed displacement pump.	Check pressure at PF. Replace pump if pressure is low.
	Low hydraulic fluid in reservoir.	Add hydraulic fluid.
	Suction valve closed on fixed displacement pump.	Open suction valve.
Water/mud in oil.	Missing inspection plugs.	Replace inspection plugs.
	Upper gearbox seals worn.	Replace seals.
Excessive foaming.	Water in oil.	Replace oil.
	Excessively viscous oil. Cold oil.	Lower oil viscosity.
Metal in oil.	Worn gears or damaged bearings.	Replace gears or bearings.
	Damaged oil pump.	Replace oil pump.
Restricted oil flow.	Foreign particles blocking orifice or nozzle.	Clean orifice or nozzle.

Troubleshooting

Gearbox lubrication hydraulic system schematic diagram

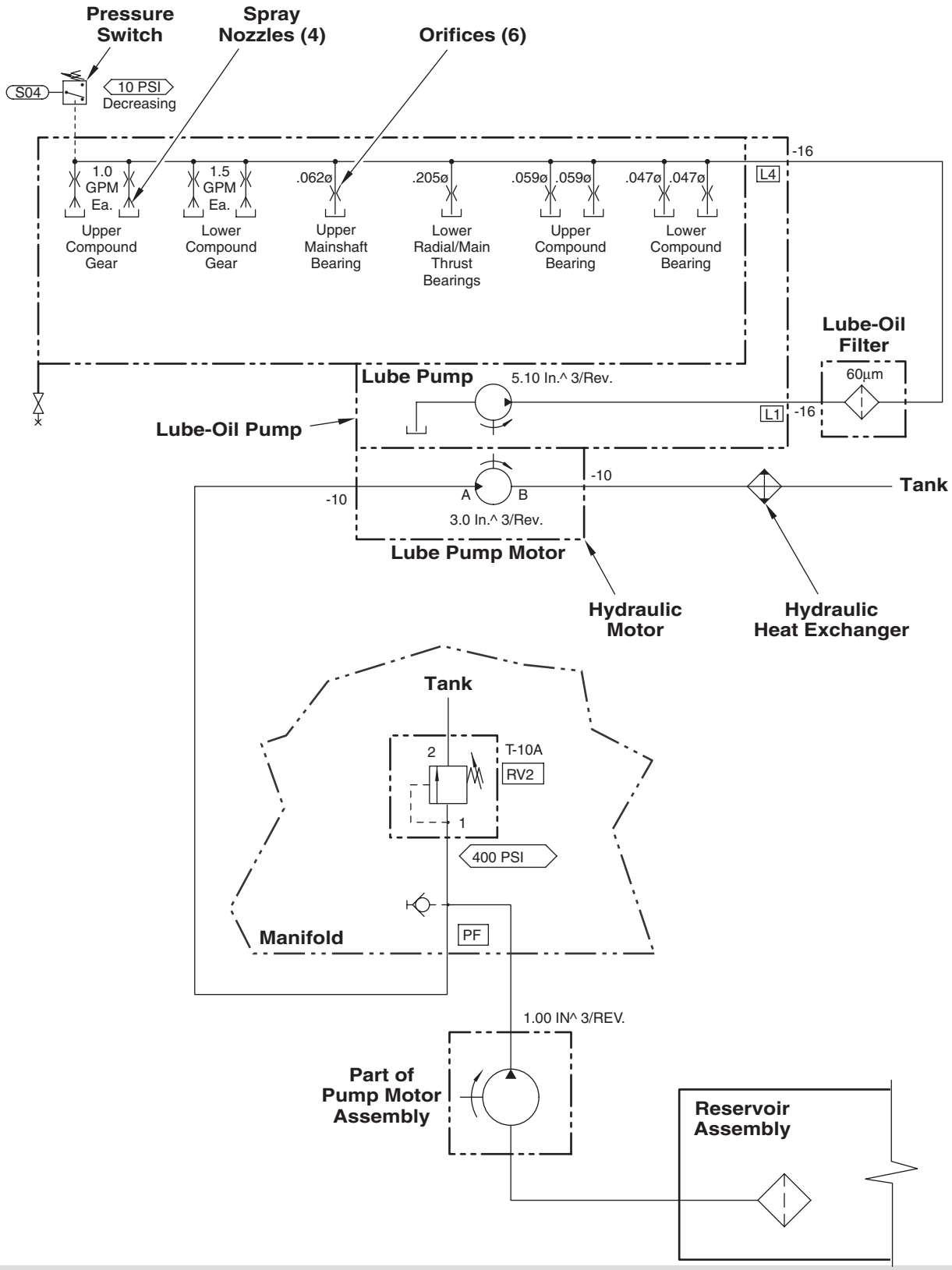

Troubleshooting

Problem	Probable cause	Remedy
Tool does not rotate.	Direct control valve or relief valve is sticking.	Inspect, repair or replace the valve.
		When you override a directional valve, you bypass the safety interlock and top drive components move, possibly causing serious injury or death.
	Solenoid valve is not electrically operating.	Check electrical connections and valve functions.
	Motor is worn out or gear teeth are broken.	Replace the motor.
	Shot pin is engaged.	Adjust the relief valve.
	Mechanical interference.	Inspect and repair.
	Directional valve does not shift.	Test pressure left and right. Replace the valve.
	Fixed valve orifice is plugged.	Clear orifice or replace the valve.
	Hydraulic lines are damaged.	Replace hydraulic lines.
Tool does not return to home position.	Valve is sticking or relief valve is out of adjustment.	Test pressures and inspect valves. Adjust the relief valve as required.
	Sensor is broken.	Replace sensor.
	If the motor will drive normally, but not drive to the home position, the cause could be the control system.	Checkout control system.
Links are not synchronized.	Counterbalance valves are out of adjustment.	Adjust valves together-pressure is the same for all four valves.

Troubleshooting

Rotating link adapter motor schematic diagram

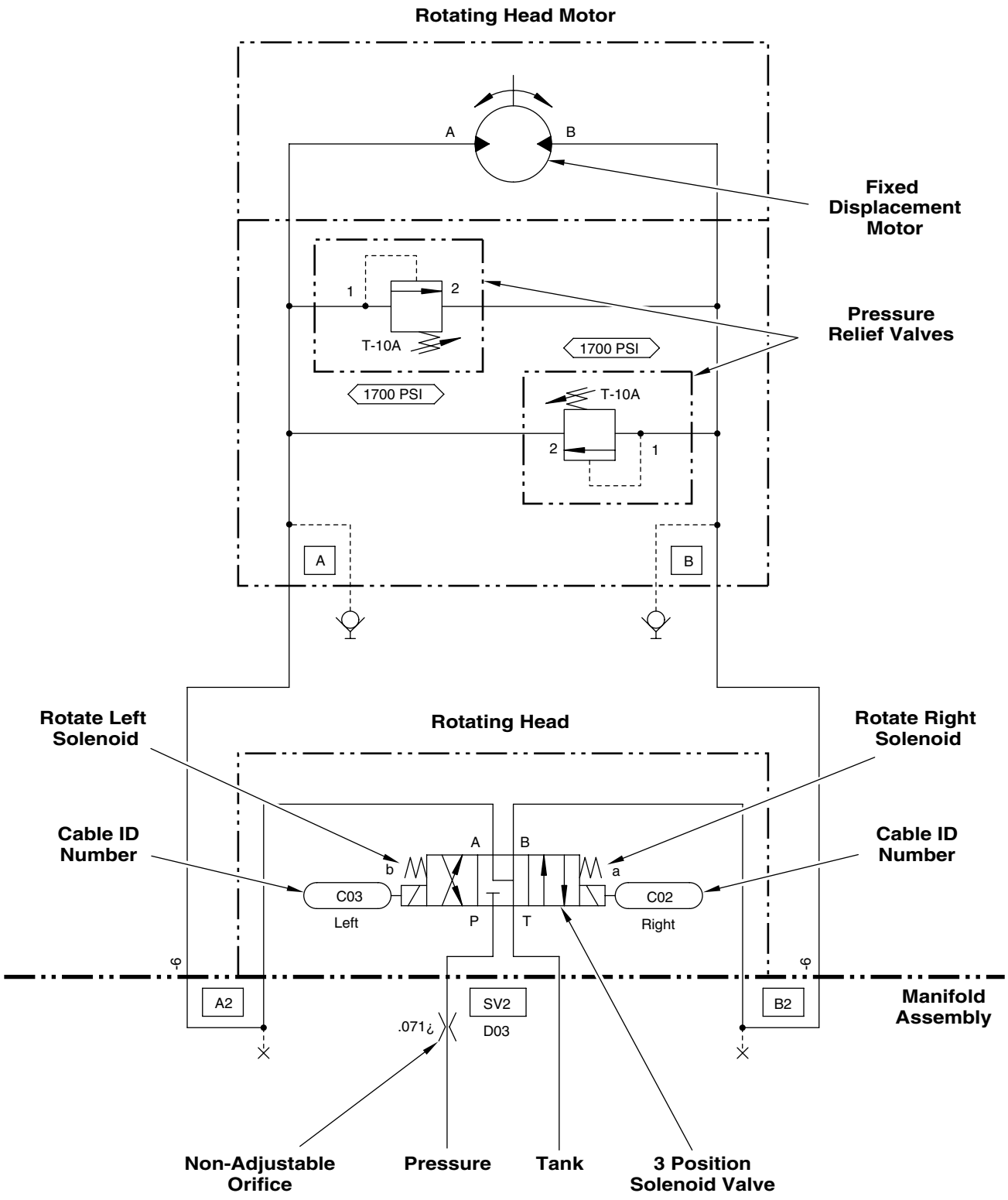

Troubleshooting

Troubleshooting the IBOP actuator schematic diagram

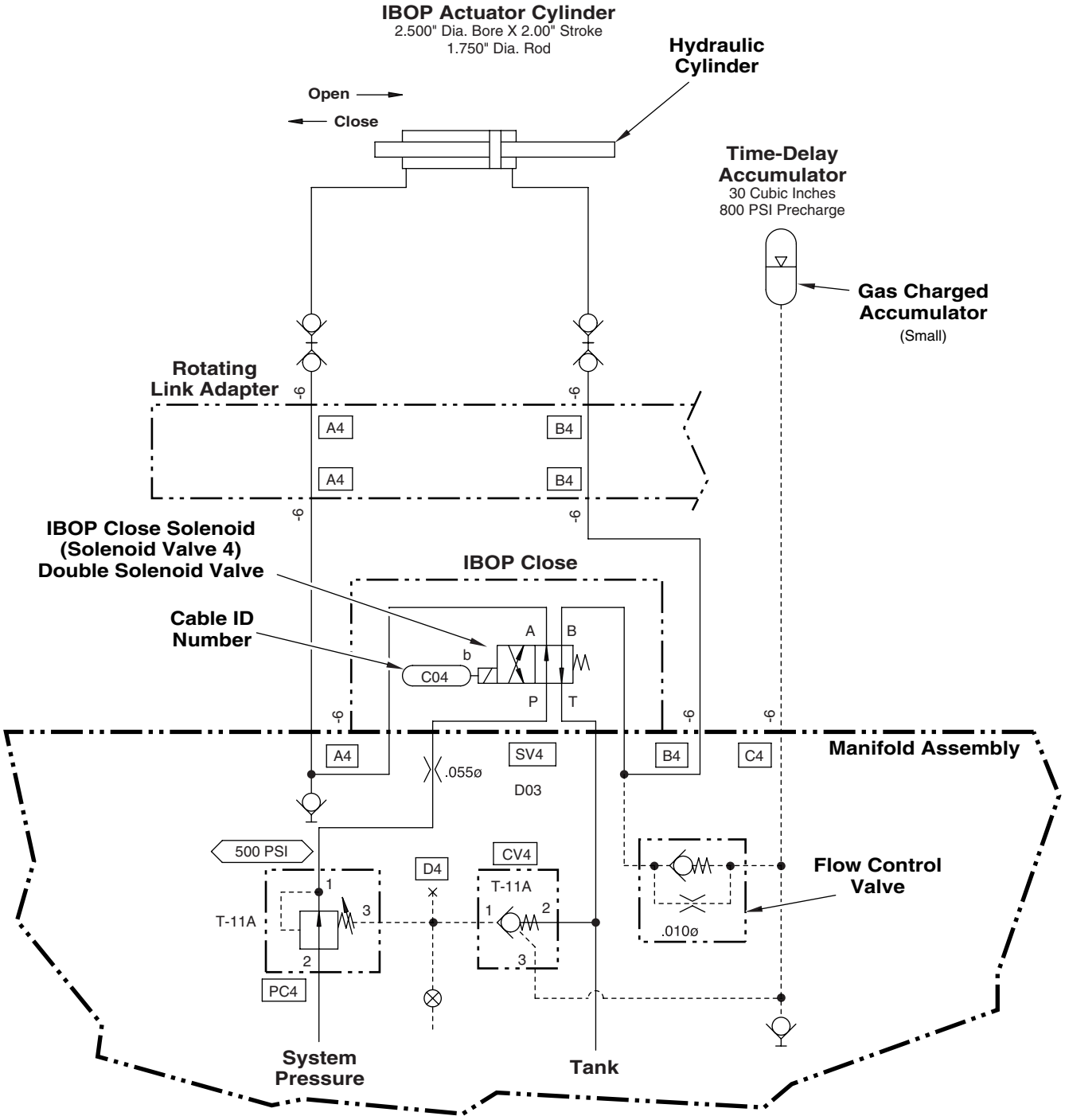

Hydraulic schematic symbols

The following hydraulic troubleshooting section provides a schematic diagram and description for each TDS-11SA hydraulic circuit. Following each schematic is a group of troubleshooting charts to help you quickly locate and correct hydraulic system problems.

When performing hydraulic troubleshooting, be aware that:

- ❑ The electrical control system can be bypassed for troubleshooting by manually overriding the solenoid valve for each operational system.

Alert all personnel near the top drive before overriding a solenoid valve. When you override a solenoid valve, you bypass the safety interlock and top drive components will move possibly causing serious injury or death.

- ❑ Test points shown in the hydraulic schematic with a box (e.g., A4) can be found on the manifold under the main body. There are also test points on the rotating link adapter motor.
- ❑ The system is preadjusted. Hydraulic problems are usually related to faulty valves, contamination, or other damage to the system rather than misadjustments. Changes to adjustments should be made only after all other possible causes have been eliminated.

Hydraulic schematic symbols

Description		Symbol	Schematic Reference
Solenoid Operated Valves	2 Position 4 Way Valves (Single Solenoid)	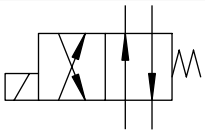 33-1	SV1, SV4, SV5, SV8, SV9
	3 Position 4 Way Valves (Double Solenoid)	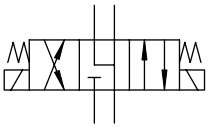 33-2	SV2, SV6
Manual Valve (Rotary)	3 Position 4 Way Valve	 33-3	MV
Pumps	Fixed Displacement	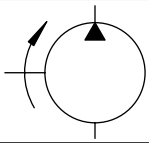 33-4	
	Variable Displacement	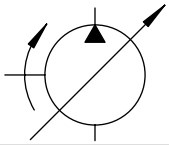 33-5	
Pressure Relief Valves	Standard Valve	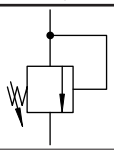 33-6	RV2, A2R, B2R, SJR
	Ventable Relief Valve	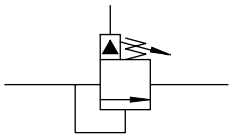 33-7	RV1
	Differential Unloading Valve	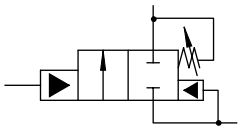 33-8	UV1
Pressure Reducing Valve		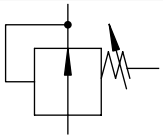 33-9	PC1, PC4
Pressure Reducing/Relieving Valve		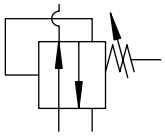 33-10	PCC
Chack Valve		 33-11	CDF, CTF, CV2, CTR, CDR, CXCD Prefill valve assembly CV1, CV2

Hydraulic schematic symbols

Description		Symbol	Schematic Reference
Check Valves	Pilot-To-Open	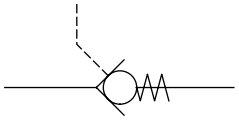 33-12	CKCB (Link Tilt)
	Pilot-To-Close	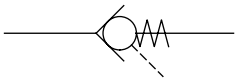 33-13	CA6, CB6, CV3, CV4 (Clamp Body)
Cavity Plug		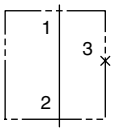 33-14	PC5
Internal Plug		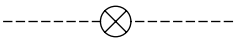 33-15	
Non Adjustable Flow Control Valves		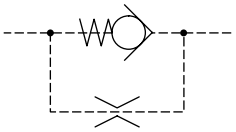 33-16	CV1
Non Adjustable Orifice		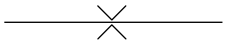 33-17	Diameter in inches
Counter-balance Valves	3 Port (Internal Drain)	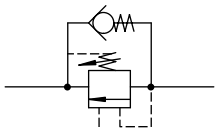 33-18	CBCA (Link Tilt Circuit)
	4 Port (External Drain)	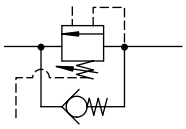 33-19	CWCK (Link Tilt Circuit)
Logic Cartridge	Standard Cartridge	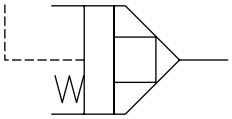 33-20	LA6, LB6, LC5, LODC
	With Metering	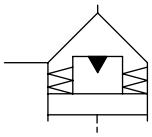 33-21	See Prefill Assembly
Quick Disconnect Coupling		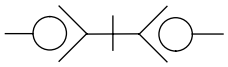 33-22	

Hydraulic schematic symbols

Description	Symbol	Schematic Reference
Non Bypass Filter	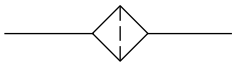 33-23	See Lube Oil Circuit
Filter with Bypass	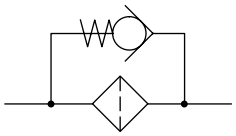 33-24	See Return Circuit
Manual Shutoff Valve	 33-25	
Thermostat	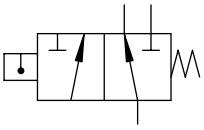 33-26	Lube Oil Circuit
Pressure Switch	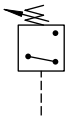 33-27	Lube Oil Circuit
Heat Exchanger	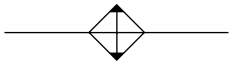 33-28	Hydraulic Circuit (Inside Brake Housing)
Pressure Compensator Control	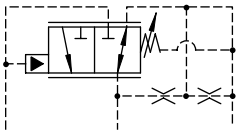 33-29	Part of the Pump
Hydro-Pneumatic Accumulator	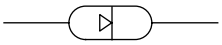 33-30	
Hydraulic Motor (Bi-Directional)	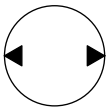 33-31	
Hydraulic Cylinder	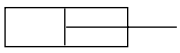 33-32	
Tank (Reservoir)	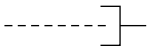 33-33	
Test Point	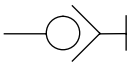 33-34	