INSTRUCTION MANUAL

Temperature sensors - R950 Series(ETR10 Series) : Thermocouple, Resistance thermometer

August 22, 2016

Rev. 9

Remote type

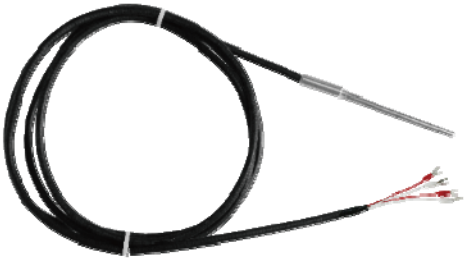

Lead wire type

WISE Control Inc.
www.wisecontrol.com

Contents

1. Safety ---------- 4

1-1. Preface ---------- 4
1-2. Usage ---------- 4
1-3. Warranty provision ---------- 4
1-4. Warning ---------- 4
1-5. Name plate ---------- 5
1-5-1. Name plate (standard) ---------- 5
1-5-2. Name plate - Head type (explosion protection design) ------- 5
1-5-3. Name plate - Extended lead wire type (explosion protection design) ------- 5
1-5-4. Serial no. ---------- 5
1-6. User's duty ---------- 6
1-7. Return for service ---------- 6

2. Structure and function ---------- 7

2-1. General information ---------- 7
2-1-1. Element construction ---------- 7
2-1-2. Tolerance classes ---------- 8
2-2. Structure of temperature sensor ---------- 9
2-2-1. Structure of temperature sensor ---------- 9
2-2-2. Structure of insertion ---------- 10
2-2-3. Function ---------- 10

3. Temperature sensor series ---------- 10

3-1. Head ---------- 10
3-2. Connection type(without thermowell) ---------- 11
3-2-1 The relation between Connection length and Head temperature ---------- 12
3-3. Process connection(with thermowell) ---------- 13
3-4. Thermowell ---------- 13

4. Installation ---------- 15

4-1. Installing ---------- 15
4-2. Condition of connection ---------- 15
4-3. Disassembling ---------- 19
4-3-1. Extension and cable ---------- 19
4-3-2. Disconnection ---------- 19
4-3-3. Disconnecting temperature sensor from terminal ---------- 19
4-3-4. Installation in explosion risk area ---------- 20

5. Electrical connection ---------- 20

6. Maintenance ---------- 21

Contents

7. Trouble shooting ---------- 21

8. Technical data ---------- 24

8-1. Condition of use ---------- 24
8-2. Electrical parameter ---------- 24
8-3. Conditions of Certificatin ---------- 24
8-4. Applied standards ---------- 24

1. Safety

1-1. Preface

Thermocouple, RTD and Thermowells manufactured by **WISE Control Inc.** are precision instrument, so user must follow its instruction manual, and any other documents to promote longer life of the instruments.

1-2. Usage

Temperature sensors are designed to use for temperature measuring. It can control and record, and its value can be used by control board. Temperature sensor can be used without its protection tube, and for special case, the tube can be properly used to protect the sensor.

1-3. Warranty provision

WISE Control Inc. Will not be responsible any damage or loss which are cased by misuse or modification of the instrument.

1-4. Warning

WARNING	***For safety reasons, attachment of instruments must be done by trained personnel.***
WARNING	***Please comply with the stated range of capacity of the instrument to avoid the malfunction of the instruments.***
WARNING	***Instrument should be properly installed in the suitable area for use.***
WARNING	***Wiring must be done according to its regulation.***
WARNING	***Before wiring, all the electric power should be turned off.***
WARNING	***For the end of the wiring, insulated compressed terminal must be used.***
WARNING	***Disassembling of the instrument is prohibited.***
WARNING	***If instrument is going to be attached to the pipe, proper protecting tube must be used.***
WARNING	***Choosing the right protection tube will depend on the condition of process line. We will not be responsible for any damages caused by using improper protection tube.***

1-5. Name plate

1-5-1. Name plate (standard)

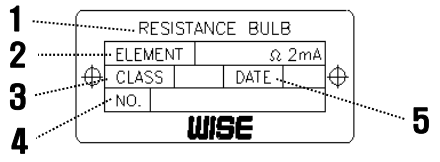

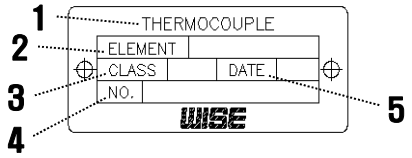

1. Type designations	**3. Protection class**	**5. Production year**
2. Element Type	**4. TAG No.**	

1-5-2. Name plate - Head type (explosion protection design)

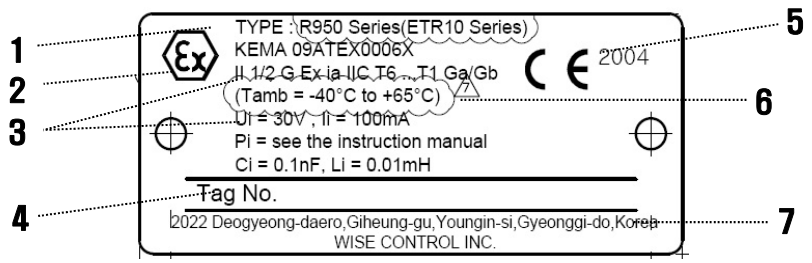

1. Type Designations	**4. TAG No.**	**6. Ambient Temperature**
2. Ex Designation	**5. CE mark**	**7. Manufacture Address**
3. Protection Class	**(EC Declaration of Conformity)**	

1-5-3. Name plate - Extended lead wire type (explosion protection design)

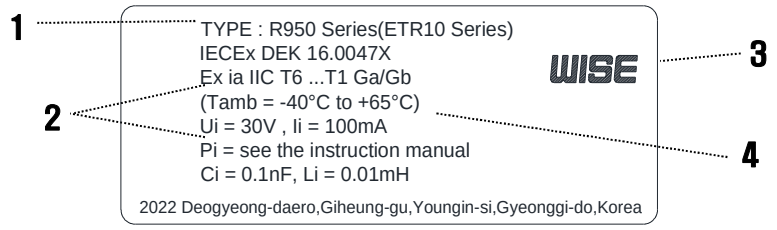

1. Type Designations	**3. Manufacture**
2. Protection Class	**4. Ambient Temperature**

1-5-4. Serial no.

1. Serial no. : R/yy/mm/00001

2. Model code

1-6. User's duty

When temperature sensor is exposed to corrosive or abrasion environment, user must carefully consider his or her safety, and choose proper product for the condition. WISE Control Inc. Can help or assist customer to choose right product, however, will not be responsible for any damages or loss.

Extended Lead Wire Type is In principal, intrinsically safe operating materials do not require a casing box. If, for the purpose of securing the inherent safety, housing have to be used, the type of protection has to correspond to ia=IP 20, e=IP65 minimum. In the case of plastic housing, a material presenting a surface resistance of < 10^9ohm has to be used. (IEC 60079-0).
In the case of light alloy housing, the proportion of magnesium has to be ≤6 %. The cable introductions in the housing mentioned above should be allowed. Complete thermometers delivered by WISE Control Inc. meet these requirements.

1-7. Return for service

1) When customer returns the instrument for re-calibration, its related documents which were enclosed with the instrument must be submitted together.
2) While transferring the instrument for service, instrument must be protected from dust and moisture.
3) The instrument must be properly packed to protected from vibration and shock.
4) Damage occurred during the transportation could be compensated by Transportation company.

- Contact for service -

Address : 2022 Deogyeong-daero, Giheung-gu, Yongin-si, Gyeonggi-do (17097), Korea
TEL : +82-31-280-5153 / +82-31-280-5114
FAX : +82-31-283-9800
E-mail : smpark@wisecontrol.com / webmaster@wisecontrol.com

2. Structure and function

2-1. General information

2-1-1. Element construction

Sheathed thermocouple is one sheathed thermocouple that is composed of fine gauged metal sheath in which high purity MgO powder is tightly compacted around thermoelement wires.
Sheathed thermocouple has high insulation and pressure resistance.
It has also high reliability because of its EMF tolerance falling within the limits stipulated by JIS, ANSI, DIN standard

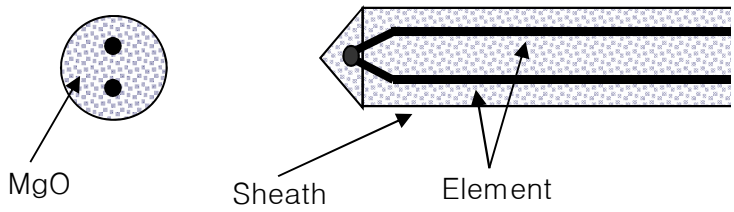

Sheathed RTD is a registered trade name of one metal sheathed RTD that has a monolithic structure comprising of sheathed element and MI cable(MgO compacted, metal sheathed lead wires).
This is newly developed RTD with quick response, longer service and life and high accuracy under critical conditions.

Sheathed RTD is a registered trade name of one metal sheathed RTD that has a monolithic structure comprising of sheathed element and MI cable(MgO compacted, metal sheathed lead wires).
This is newly developed RTD with quick response, longer service and life and high accuracy under critical conditions.

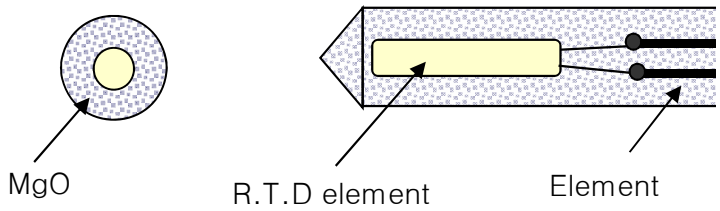

2-1-2. Tolerance classes

Thermocouple

Standard	Type	Class	Temperature range	Maximum deviation
ASME/ANSI MC96.1	K	Standard	-0…293 ℃	±2.2 ℃
			293…1250 ℃	±0.0075×｜t｜
		Special	-0…275 ℃	±1.1 ℃
			275…1250 ℃	±0.0040×｜t｜
	E	Standard	-0…293 ℃	±1.7 ℃
			293…870 ℃	±0.0050×｜t｜
		Special	-0…293 ℃	±1.0 ℃
			293…870 ℃	±0.0040×｜t｜

Resistance thermometer

Type	Nominal resistance (Ω at 0 ℃)	Class	Temperature range	Maximum deviation
Pt100	100	A	-30…350 ℃	±(0.15+0.0020｜t｜)
			-50…-30 / 350…400 ℃	±(0.30+0.0050｜t｜)
		B	-50…400 ℃	±(0.30+0.0050｜t｜)

2-2. Structure of temperature sensor

2-2-1. Structure of temperature sensor

Approved cable glands and sealing are to be used for the respective category according to the requirements of standard EN 60079-0, -7, -11.

< Explosion Proof Head Type >

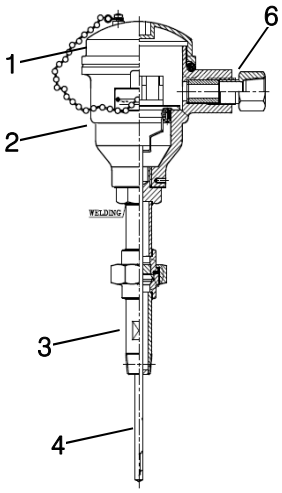

< Extended Direct Mounting with Terminal Head Type >

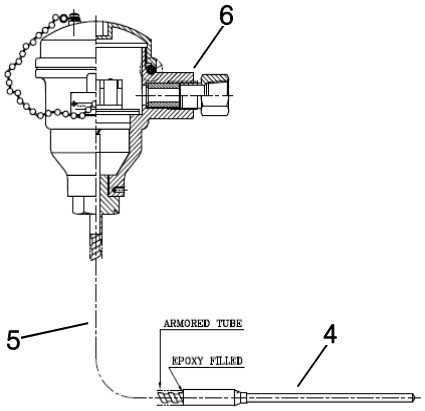

< Remote Mounting with Terminal Head Type >

1. Cover
2. Head
3. Union & Nipple
4. Sheath
5. Flexible Tube
6. Conduit Connection (Enclosure entries)

WARNING : To maintain IP65 rating, cable gland must be explosion proof certified.

< Extended Lead Wire Type >

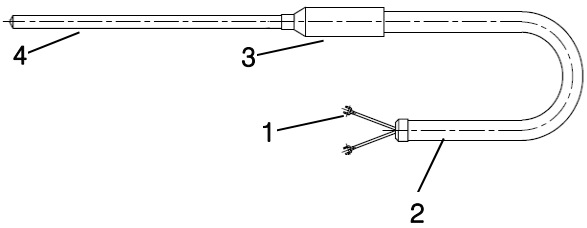

1. Cable
2. Lead wire
3. Sleeve
4. Sleeve

< Extended Lead Wire Type >

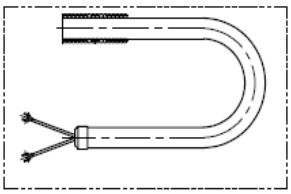

< Extended Lead Wire with Steel Armored Tube Type >

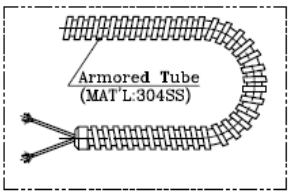

< Extended Lead Wire with Shrink Tube Type >

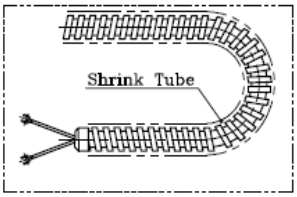

- At external connection facilities for the sensor assembly of non connection head types, the requirements in clause 6.2.1 in IEC 60079-11:2011 for separation between intrinsically safe circuits and possibly non-intrinsically safe circuits shall be strictly followed.
- External connection facilities for the sensor assembly of non connection head types shall be installed in an enclosure which affords it a degree of protection of at least IP20(ia) and IP65(e).
- When connecting the external connection facilities and the sensor assembly of non connection head types, adequate strain relief for the wiring shall be provided.

2-2-2. Structure of insertion

< Head type >

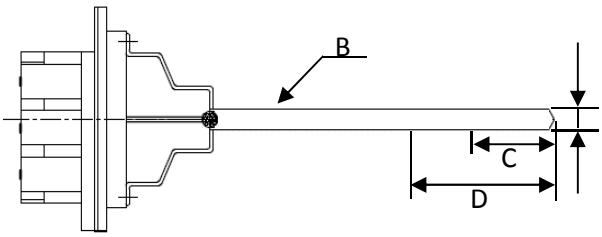

Extended Direct Mounting with Terminal Head Type **- Nipple type**

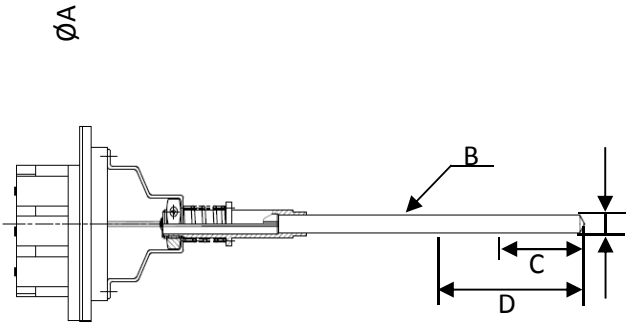

Extended Direct Mounting with Terminal Head Type **- Nipple type with Spring load**

< Non head type >

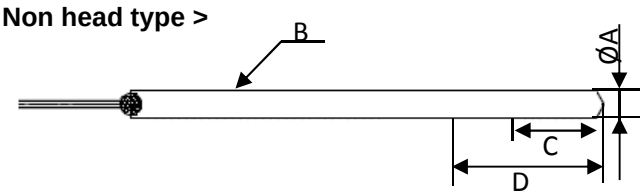

Remote Mounting with Terminal Head Type, Extended Lead Wire Type

A : Out diameter of Insertion
B : Mineral-insulated, sheathed cable, with compact wires embedded in MgO
C : Temperature-sensitive length(50mm)
D : Non-bendable length(100mm)

2-2-3. Function

Process temperature can be measure by the Series R1 or R2 temperature sensor.
Sensor varies from low, middle and high.
Temperature sensor element is suitable for DIN43735-1.

3. Temperature sensor series

3-1. Head

3-1-1. Head type and material

- Head type : Single entry type or Dual entry type
- Material : ALDC or Stainless steel(316)

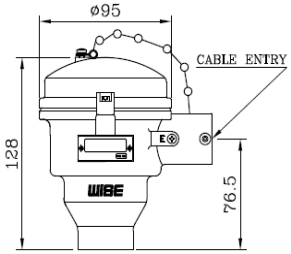

Single entry type

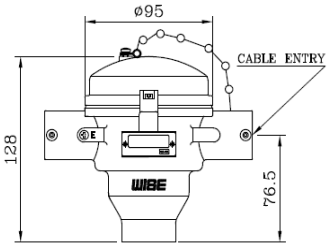

Dual entry type

WARNING : To maintain IP65 rating, cable gland must be explosion proof certified.
For Cable Entry Size, refer to the table below < table. Cable entry size > For cable entry not in use, it should either be blocked or arranged with the components supplied by the manufacturer.

< Table. Cable entry size >

Entry Type	Single Entry Type	Dual Entry Type
Connection Size	1/2" PF	1/2" PF x 1/2" PF
	3/4" PF	3/4" PF x 3/4" PF
	-	1/2" PF x 3/4" PF

3-2. Process connection(without Thermowell)

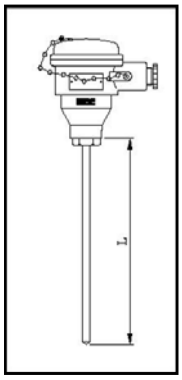

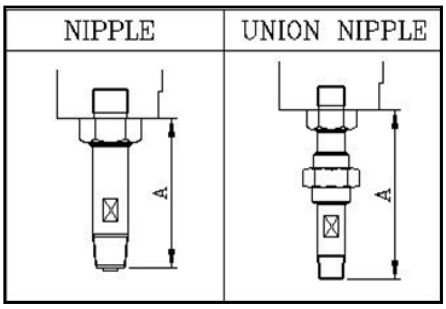

Process connection (Without thermowell)

If standard connections are available in the following types without thermowell.

- M20 x 1.5
- G 1/2" and G 1" DIN 43772 (DIN 3852 form A)
- G 1/2" , G 3/4" and G 1" BSP cylindrical
- 1/2" and 3/4" NPT

Other versions may be supplied upon request.

Table 3-2 illustrates the engaging lengths.

Process connection (Without thermowell)		**Thread**	**mm**
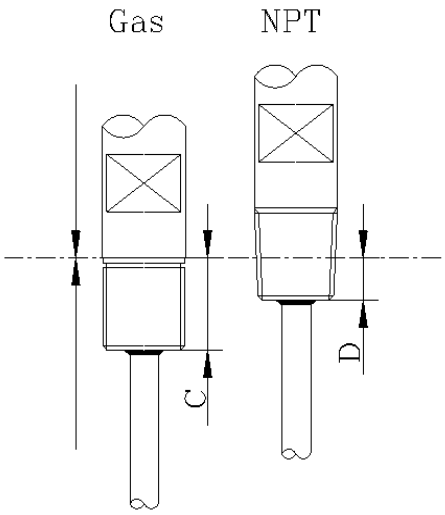	**C**	G 1/2" DIN	18
		G 3/4" DIN	20
		G 1" DIN	22
		G 1/2" BSP	16
		G 3/4" BSP	18
		G 1" BSP	20
		M20 x 1.5	14
	D	1/2" NPT	8
		3/4" NPT	8.6
		1" NPT	10

< Table. 3-2 >

3-2-1 The relation between Connection length and Head temperature

- Explosion proof head type

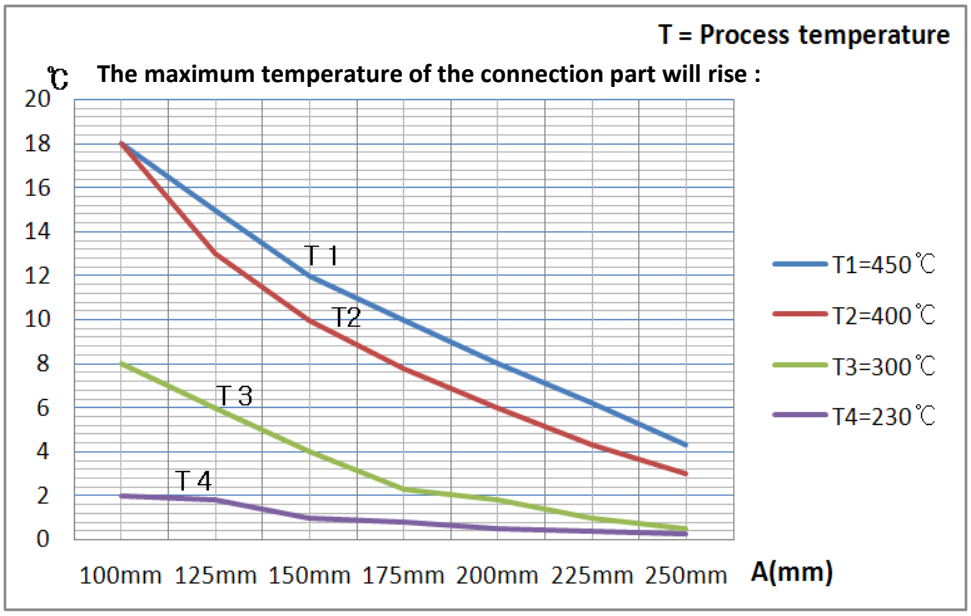

-Extended lead wire type

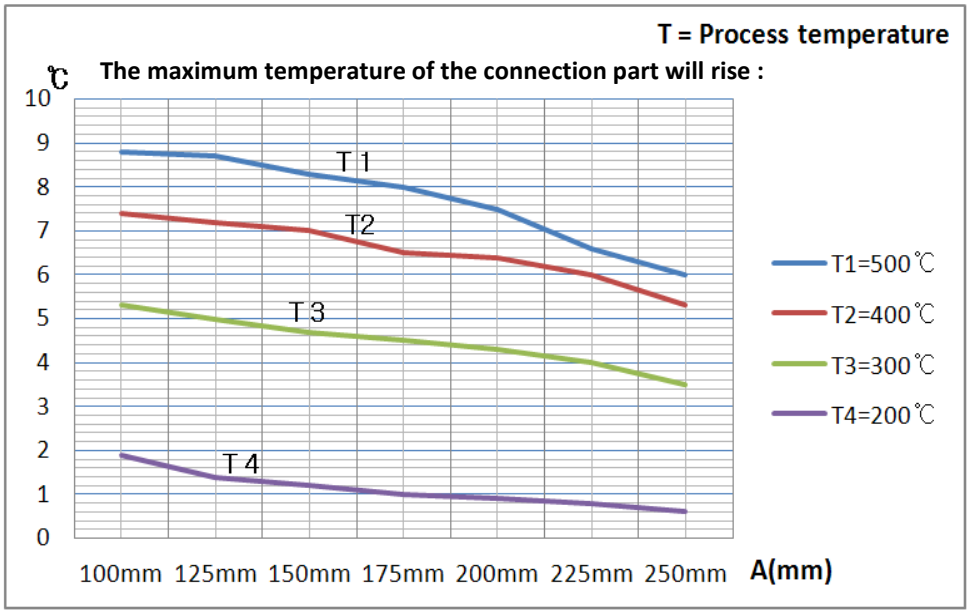

The extension tube and lead wire is the component between the thermowell and connection head.

The extension tube and lead wire performs the following function

· Bridge existing insulation

· Cooling section between the connection head and medium that protects the connecting point and built-in electronics against high temperature.

Ext. tube length : A	Length from process connection to connection head
Standard ext. tube length	100mm & 150mm
Lead wire length : B	Length from process connection to lead wire
Minimum lead wire length	100mm

3-3. Process connection(with thermowell)

■ Weld-in / insertion thermowells

Type	Compression fitting
Straight (WISE A6300)	G 1/2A, 1/2" NPT
Tapered (WISE A6310)	
Stepped (WISE A6320)	

■ Screwed thermowells

Type	Screw-in thread
Straight (WISE A6000)	1/2" NPT, 3/4" NPT, 1" NPT M20x1.5, M27x2 1/2" BSPT, 3/4" BSPT, 1" BSPT
Tapered (WISE A6010)	
Stepped (WISE A6020)	

■ Flange thermowells

Type	RF, RJ Flange, ANSI / ASME B16.5	Tri-clamp Flange BS 4825
Straight (WISE A6100)	1" 150 lbs., 1 1/2" 150 lbs., 2" 150 lbs., 1" 300 lbs., 1 1/2" 300 lbs., 2" 300 lbs., 1" 600 lbs., 1 1/2" 600 lbs., 2" 600 lbs., 1" 1500 lbs., 1 1/2" 1500 lbs., 2" 1500 lbs., 1" 2500 lbs., 1 1/2" 2500 lbs., 2" 2500 lbs.,	1", 1.5", 2"
Tapered (WISE A6110)		
Stepped (WISE A6120)		

3-4. Thermowell

Thermowell is design to protect the sensing unit from flow, pressure and corrosion in the pipeline, and while replacing the sensor, it is designed to prevent the leakage.
User must choose right protection tube for the right application.
Wise Control Inc. can help or assist customer to choose right product, however, will not be responsible for any damages or loss.

1) Material
In general, the thermowell material chosen for the installation is governed mainly by the corrosion conditions the thermowell will face.
Recommended materials for various services are given in the corrosion table.
Occasionally the material consideration is one of strength rather than corrosion.
For example, a stainless steel thermowell may be required for high pressure water service where otherwise a brass thermowell would be satisfactory from a corrosion standpoint.

2) Insertion
The distance from the end of the well to the underside of the thread, or other connection means, (designated as "U") is the insertion length.

3) Bore size
Almost any installation uses several types of temperature measuring instruments.
The selection of a standard bore diameter can produce extreme flexibility within the plant.
The bore size of thermowells is shown in this Catalogue Ordering Information.

4) Tapered or straight type
Tapered type thermowells provide greater stiffness for the same sensitivity.
The higher strength to weight ratio gives these thermowells higher natural frequency than for equivalent length straight type thermowells, thus permitting operation at higher fluid velocity.

5) Thermowell Basic Drawing

	THREAD TYPE		FLANGE TYPE	
	PLANE TYPE	LAG TYPE	PLANE TYPE	LAG TYPE
CLOSED END TUBE STARAIGHT TYPE	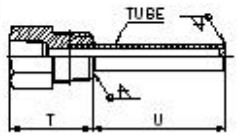	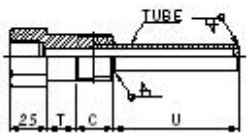	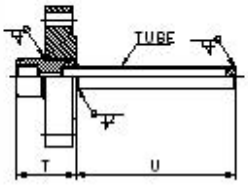	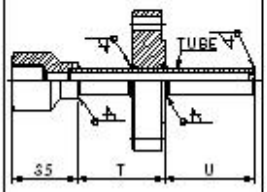
	A5000	A5001	A5100	A5101
DRILLED BAR STOCK STARAIGHT TYPE	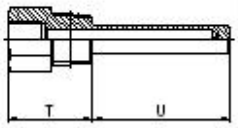	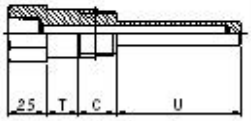	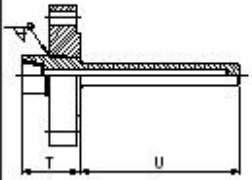	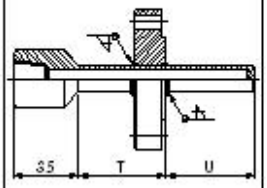
	A6000	A6001	A6100	A6101
DRILLED BAR STOCK TAPER TYPE	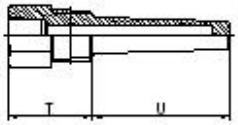	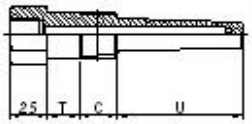	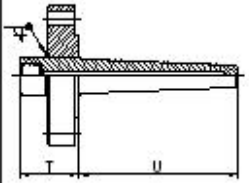	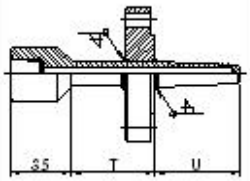
	A6010	A6011	A6110	A6111
DRILLED BAR STOCK STEP TYPE	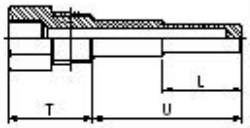	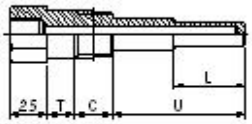	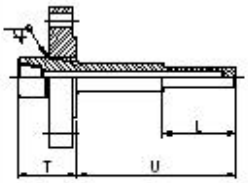	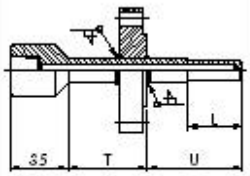
	A6020	A6021	A6120	A6121
DRILLED BAR STOCK WELD TYPE	WELD-IN TYPE		SOCKET WELD TYPE	
	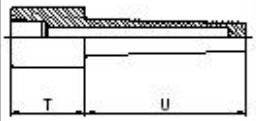	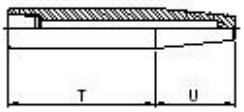	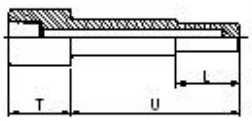	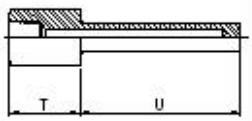
	A6310	A6311	A6320	A6300

※ *Refer to attachment 1. thermowells specification.*

4. Installation

4-1. Installing

1) When installing Thermowell onto the pipe, please refer to the drawing below.

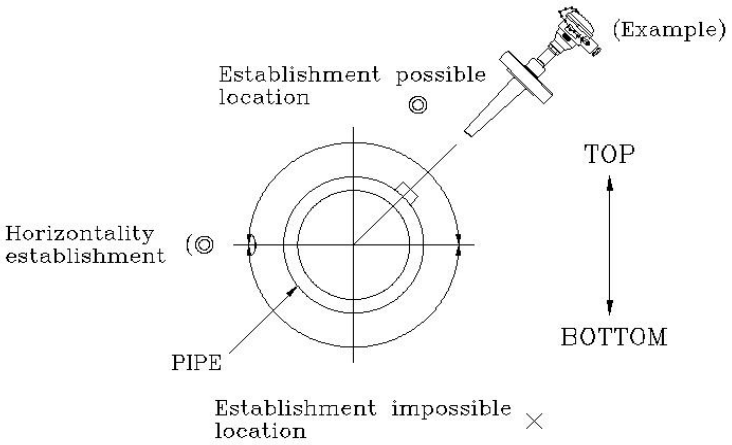

2) Install Thermowell in the area where average temperature can be measured.
3) Make sure all the sensing parts are fully inserted.
4) Try to avoid the area where vibration is present.
5) To minimize the nature frequency effect, try to shorten the length of the insertion. (50~60mm)
6) When connecting part is thread type, use sealing material.
7) When flow is present, try to install Thermowell sensing part against the flow. If horizontal or vertical installation is not possible, then install 45°

4-2. Condition of connection

4-2-1. Installation Location

1) Elbow tube line Installation

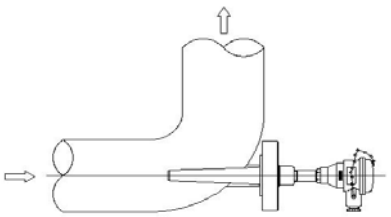

Flowing side, establishment

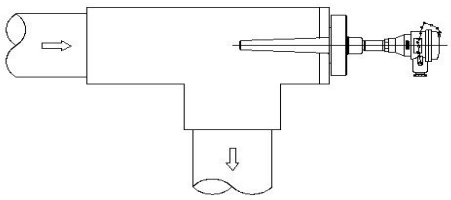

Flowing side, establishment

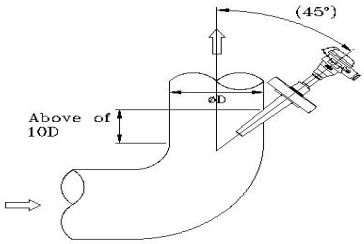

Inclined

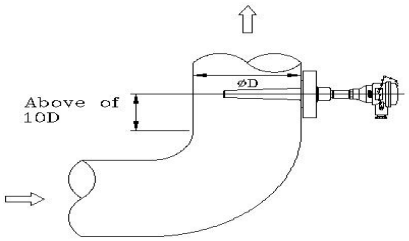

Crossing establishment

2) Straight Installation

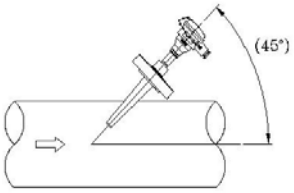

Inclined establishment

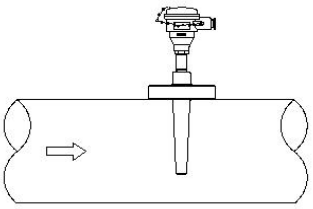

Crossing establishment

3) Narrowing Installation

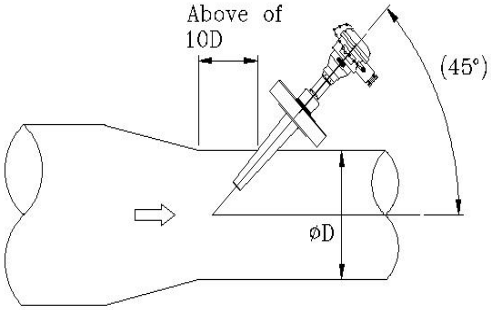

Inclined establishment

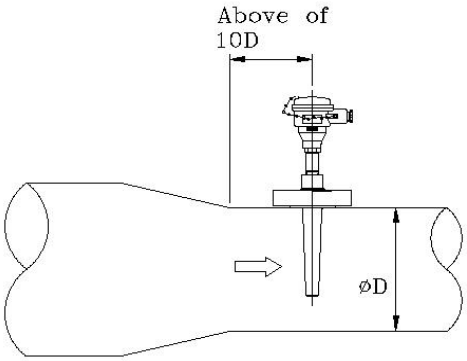

Crossing establishment

4) Combination with other instruments

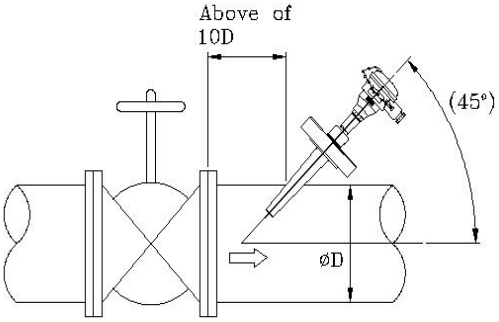

Inclined establishment

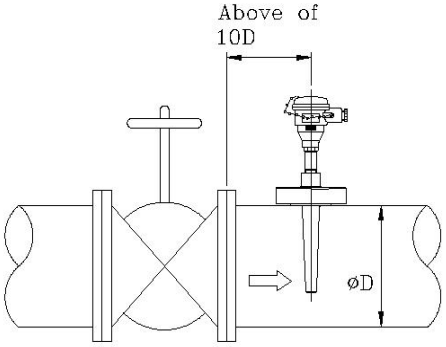

Crossing establishment

5) "T" joint Installation

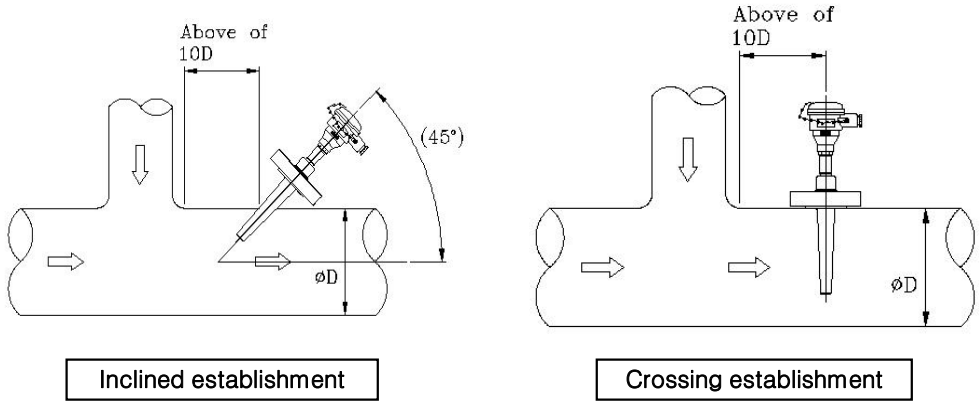

6) Installation with Header

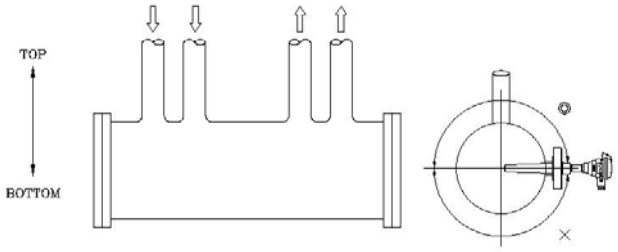

* Insert Length should be less than 300mm.

Inserting Length shall be selected according to velocity of flow and connecting condition

Applied flow velocity	Crossing establishment or inclined establishment insert length	Against Flow
Less than 4 ㎧	150 ~ 200㎜	150 ~ 300㎜
Less than 2.5 ㎧	150 ~ 300㎜	150 ~ 400㎜
Less than 0.3 ㎧	150 ~ 2000㎜	

4-2-2. Installation notes for gas hazardous area

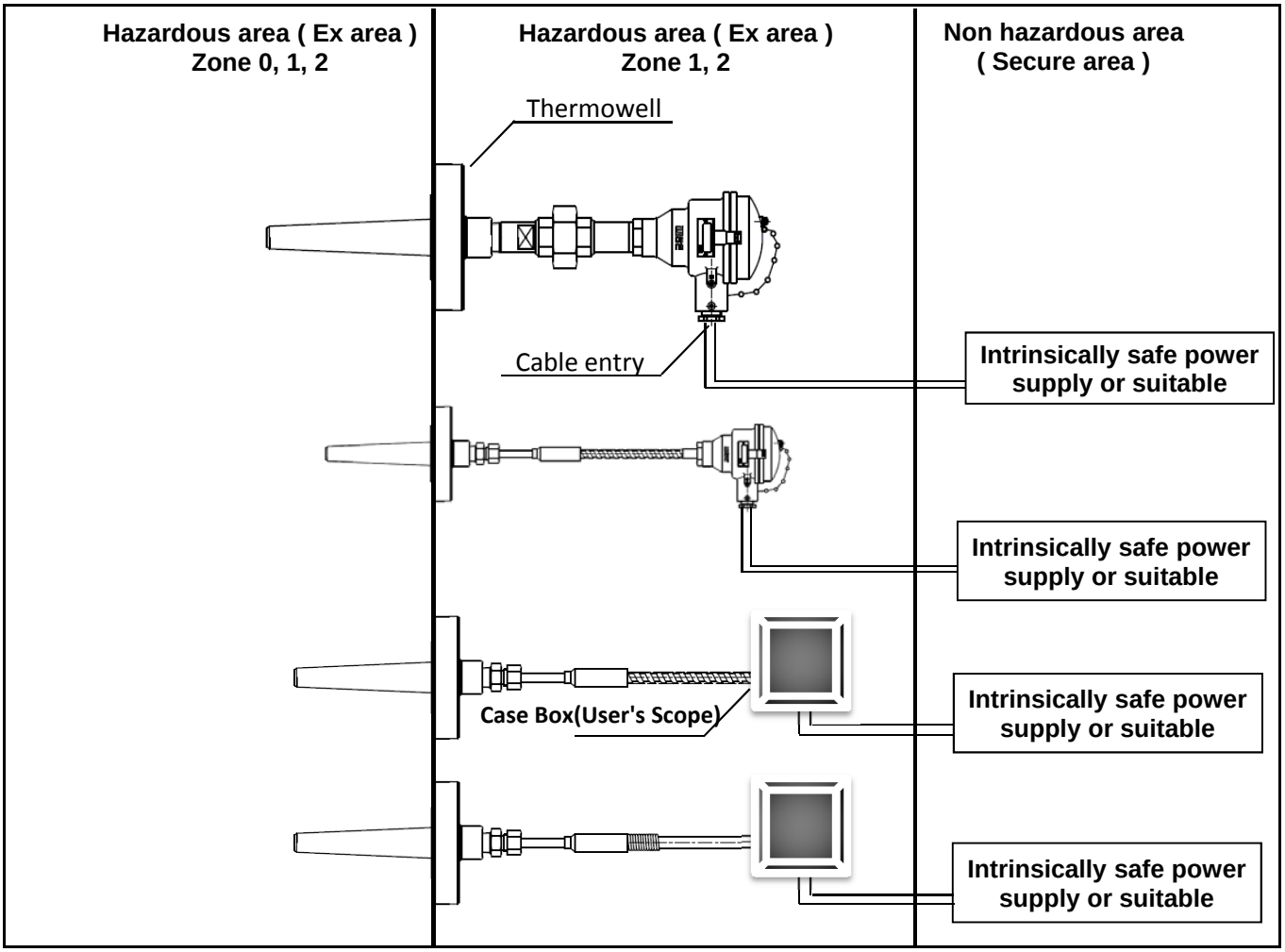

Regarding to the above mentioned installation methods, suitable solutions are respectively.

- TIG welding, laser welding or equivalent methods; the internal structure of the inserts has not to be altered by the welding excepting on the insert outer surface.
- Using of standardized compression fittings (DIN, ISO)
- Using of standardized thermowells with suitable process connections (weld-in connections, threaded connections, industry flanges, hygienic flanges)
- Using of metal enclosure made of stainless or aluminum alloy contain by mass, less than 7.5% magnesium, titanium and zirconium.
- Conditions of Certification

  Special conditions, "X" marked, are as bellows

  1) At external connection facilities for the sensor assembly of non connection head types, the requirements in clause 6.2.1 in IEC 60079-11:2011 for separation between intrinsically safe circuits and possibly non-intrinsically safe circuits shall be strictly followed.
  2) External connection facilities for the sensor assembly of non connection head types shall be installed in an enclosure which affords it a degree of protection of at least IP20(ia) and IP65(e).
  3) When connecting the external connection facilities and the sensor assembly of non connection head types, adequate strain relief for the wiring shall be provided.

4-3. Disassembling

4-3-1. Extension and cable

1) Extension cable must share the same specification with temperature transmitters.
2) Wire size of extension cable must be considered with voltage flow.
3) Extension cable should be protected from damages such as cutting.
4) Temperature Resister cable must be chosen by 2 wire, 3 wire, and 4 wire accordingly, and the end wire must be grounded.

4-3-2. Disconnection

1) Before disconnecting, Explosion proof lever product must be turned off.
2) Before disconnecting, temperature transmitter's polarity must be checked, for resister, disconnecting must be performed by separating a terminal A/B/B(in case of 3 wire)
3) If necessary, connect ground-wire to the head.
4) For extension and cable, end wire should be used with compressed terminal, and use screw to secure the wire.
5) For Explosion proof level, avoid cover from opening during the operation, and use locking device to secure the cover.

4-3-3. Disconnecting temperature sensor from terminal

1) Resistance temperature detector(Terminal Head) - Ex ia

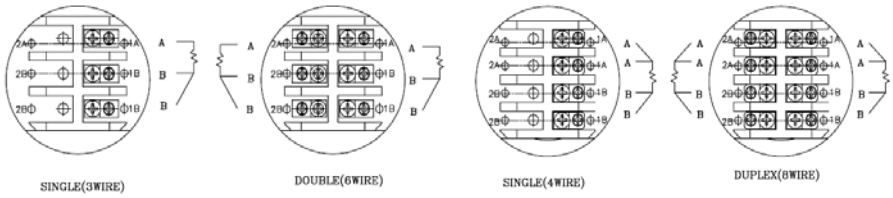

2) Resistance temperature detector(Terminal Head) - Ex e

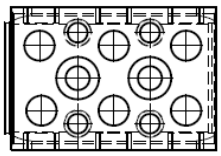

SINGLE (3 WIRE)

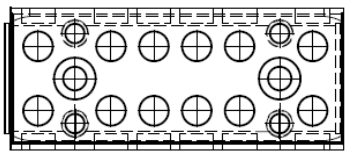

SINGLE(4 WIRE), DOUBLE (6 WIRE)

3) Resistance temperature detector(Extended Lead Wire)

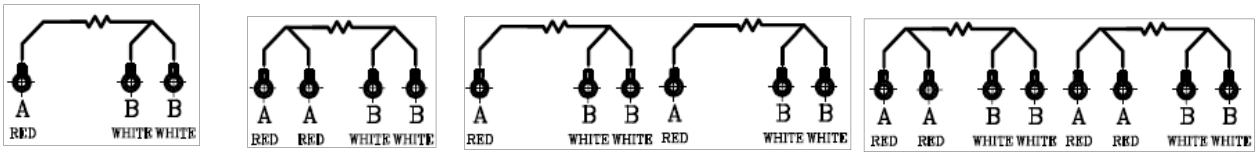

SINGLE(3WIRE) SINGLE(4WIRE) DOUBLE(6WIRE) DUPLEX(8WIRE)

※ The colors of each wires can be replaced with the ones of the user's choice.

4) Thermocouple(Terminal Head)

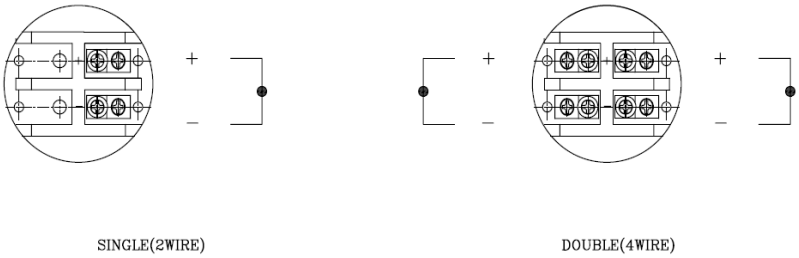

5) Thermocouple(Terminal Head) - Ex e

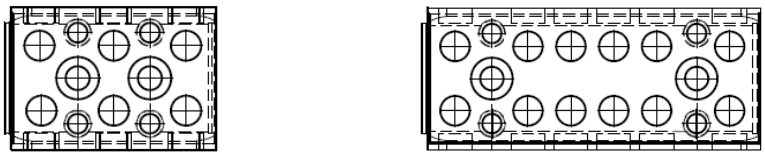

SINGLE (2 WIRE) DOUBLE (4 WIRE)

6) Thermocouple(Extended Lead Wire)

SINGLE(2WIRE) DOUBLE(4WIRE)

ANSI		JIS(KS)	
+	–	+	–
YELLOW	RED	RED	WHITE
PURPLE	RED	RED	WHITE
WHITE	RED	RED	WHITE
BLUE	RED	RED	WHITE
GRAY	RED	RED	WHITE
BLACK	RED	RED	WHITE

※ The colors of each wires can be replaced with the ones of the user's choice.

Wire Color

4-3-4. Installation in explosion risk area

1) Marking of equipment : II 1/2G Ex ia IIC T6… T1 Ga/Gb, II 2G Ex e IIC T6… T1 Gb
2) User shall install this product suitably according to explosion proof classification

5. Electrical connection

It must be ensured with this instrument that the power feed occurs using an approved intrinsically safe power supply of the category [Ex ia] IIC. The electrical parameters supplied to each temperature sensing element in the sheath (sensor assembly) shall be limited within maximum permissible entity parameters(Ui, Ii) and the total power supplied to all temperature sensing elements in the sheath shall be limited within maximum permissible entity power(Pi).

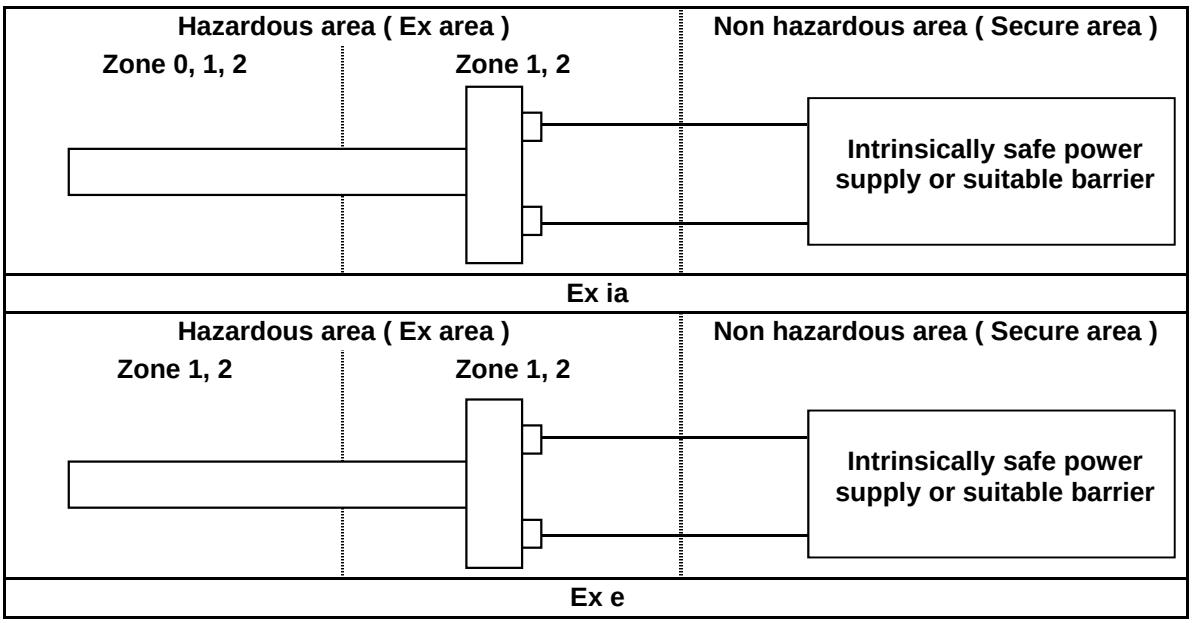

The insulation between temperature sensors and the frame of this equipment, which may be earthed, complied with the dielectric strength test.
- 500V AC Voltage test, 1minute, leakage current<5mA.
When the intrinsically safe circuit is grouned, this may be only be grounded at one point.
For use in explosion risk areas, attention must be paid so that an unallowable electrostatic charging of the temperature sensor is avoided.

6. Maintenance

1) The general safety of facility often depends on the reliability of indications on the temperature sensor installed in the facility, thus any temperature sensor that seams to be abnormal must be maintained by periodic testing if necessary confirmation of temperature sensor accuracy should be maintained by periodic testing

2) Verification and recalibration must be carried out by appropriate test equipment and qualified personnel

7. Trouble shooting

1) Identifying Problems
A problem with a temperature sensor is normally detected through an error in temperature indication. Since all of temperature indication errors are not caused by the temperature sensor, it is necessary to accurately grasp what is causing the problem.
The most frequent problem causes would be breakage or defects in the insulation of the thermocouple or resistance thermometer bulb. The phenomena triggered by those causes differ greatly depending on the connected instrument or ambient environment.

2) Troubleshooting for Thermocouples

Table 7-2 Troubleshooting for Thermocouples

Trouble	Occurrence Timing		Possible Cause	Remedy
	Upon Start--up	During Opera-tion		
A temperature indication scales out to the minus side	O	O	• The polarity of the sensor at either the reciever or thermocouple is reversed	• Check and connect correctly.
	O	O	• Burn out setting of the receiver is at the lower limit and the thermocouple or compensation lead wires are open circuited or the terminal block has no power continuity. •Trouble of the receiver.	• Check for snapping and continuity with a tester, and replace or reconnect the terminals. • Check and repair or replace
A temperature indication scales out to the plus side	O	O	• Burn out setting of th receiver is at the upper limit, and the thermocouple or compensation lead wires are snapped or the terminal block has no power continuity. •Trouble of the receiver.	• Check for snapping and continuity with a tester, and replace or reconnect the terminals. • Check and repair or replace
The temperature sensor indicates close to a room temperature.	O	O	•The input connection terminal or conpensation junction of the receiver is short-circuited.	• Check the connection terminals and remove the cause of short-circuit.
		O	•Internal short-circuit of the conpensation lead wires. •Trouble of the receiver.	• Check for continuity with a tester, and repair or replace.

2) Troubleshooting for Thermocouples

Table 7-2 Troubleshooting for Thermocouples

Trouble	Occurrence Timing		Possible Cause	Remedy
	Upon Start--up	During Opera-tion		
A temperature indication remains unchanged if the temperature changes.	O	O	• Open circuit in thermocouple. • Open or short circuit of the compensation lead wires. • Trouble at the receiver. (No burnout circuit)	• Check the circuit of the thermocouple/co,compensation lead wires and instrument. • Repair or replace.
Unstable indication.	O	O	• Intermittent open circuit of the thermocouple or compensation lead wires. • Contact failure at the terminal block. • Trouble at the receiver.	• Check for continuity with an ohmmeter and replace or reconnect the terminals. • Check and repair or replace.
	O		• Electric noise interference. • Effect of fluctuation of the fluid temperature to be measured.	• After a check, change the grounding method or shield. • Change to the slower response thermocouple.
An indication value is abnormal.	O		• Mismatch of thermocouple or compensation lead wires. • Different polarity of the compensation lead wires. • Faulty installation of the thermocouple • Type of the receiver or range setting is wrong.	• Check and set again or change the connection • Check installation position, insertion length, and installation method, and reinstall. • Check and set again.
		O	• Deterioration of the thermocouple's thermoelectromotive force • Deterioration of insulation of the thermocouple or compensation lead wires. • Change of thermocouple installation. • Trouble in the receiver.	• Replace • Replace • Check, and repair or replace. • Check, and repair or replace.

3) Troubleshooting for Resistance Thermometer Sensors

Table 7-3 Troubles and Remedies for Resistance Thermometer Sensors

Trouble	Occurrence Timing		Possible Cause	Remedy
	Upon Start--up	During Opera-tion		
Negative temperature indication	O	O	• Faulty 3 -wire type connectio	• Check and connect correctly.
	O	O	• Short -circuit at the resistance element block.. • Burnout setting of the receiver is at the lower limit, and the resistance element or extension conductors are open or the terminal block has no continuity.	• Check for short circuit with an ohmmeter or reconnect the terminals
Excessive positive temperature indication	O	O	• The resistance element is open circuit. • Burnout setting of the receiver is at the lower limit, and the resistance element or extension conductors are open or the terminal block has no continuity.	• Check for open circuit with an ohmmeter, and replace or reconnect the terminals.
Temperature indication remains unchanged if a temperature changes.	O	O	• Trouble in the receiver.	• Check, and repair or replace.
An indication value is unstable.	O	O	• The input connection terminal or compensation junction of the receiver is short-circuited	• Check for open circuit with an ohmmeter, and replace or reconnect the terminals. • Check and repair or replace.
	O		• Internal short-circuit of the conpensation lead wires. • Trouble in the receiver.	• After a check, change the grounding method or shield.

Trouble	Occurrence Timing		Possible Cause	Remedy
	Upon Start--up	During Opera-tion		
An indicationvalue is abnormal.	O		• Faulty resistance value of th resistance element. • Faulty installation of the resistance thermometer sensors. • Type of the receiver or setting of the range is wrong.	• Replace • Check for an installation position, insertion length, and installation method, and reinstall.
		O	• Deterioration of insulation of the resistance thermometer sensor or extension conductors. • Change of installation of the resistance thermometer sensor. • Trouble of the receiver.	• Check the insulation resistance, and replace. • Check the insulation, and repair or replace. • Check the receiver , and repair or replace.
An indicationvalue is several percents higher.	O		• A "JPt" type resistance thermometer sensor is connected to a "Pt" type instrument.	• Replace with an adequate one which meets the standard.
An indicatiovalue is several percents lower.	O		• A "Pt" type resistance thermometersensor is connected to a "JPt" typeinstrument.	• Replace with an adequate one which meets the standard.

8. Technical data

8-1. Condition of use

1) Marking of equipment : II 1/2 G Ex ia IIC T6… T1 Ga/Gb, II 2 G Ex e IIC T6… T1 Gb

WARNING
Tamb(ia)= -40 ~ 65 ℃, Tamb(e)= -40 ~ 65 ℃
Temperature > 65 ℃ that are not allowed.

3) Measuring insert in process pipeline

Temperature class	$P_i \leq$ 50 mW	$P_i \leq$ 100 mW	$P_i \leq$ 200 mW	$P_i \leq$ 500 mW	$P_i \leq$ 650 mW	$P_i \leq$ 750 mW
	Max. allowed process temperature T_p (°C)					
T1	431	424	411	378	363	359
T2	281	274	261	228	213	209
T3	186	179	166	133	118	114
T4	121	114	101	68	53	49
T5	86	79	66	33	18	14
T6	71	64	51	18	3	0

8-2. Electrical parameter

Ui = 30V, Ii = 100mA, Pi = 750mW, Ci = 0.1nF , Li = 0.01mH

Limiting values - special conditions

·T6: I = 7mA, U max = 30 V, P < 50mW ·T3: I = 66mA U max = 30 V, P < 500mW

·T5: I = 13mA U max = 30 V, P < 100mW ·T2: I = 86mA U max = 30 V, P < 650mW

·T4: I = 26mA U max = 30 V, P < 200mW ·T1: I =100mA U max = 30 V, P < 750mW

The electrical parameters supplied to each temperature sensing element in the sheath (sensor assembly) shall be limited within maximum permissible entity parameters(Ui, Ii) and the total power supplied to all temperature sensing elements in the sheath shall be limited within maximum permissible entity power(Pi).

8-3. Conditions of Certification

Special conditions, "X" marked, are as bellows

1) At external connection facilities for the sensor assembly of non connection head types, the requirements in clause 6.2.1 in EN 60079-11 :2012 for separation between intrinsically safe circuits and possibly non-intrinsically safe circuits shall be strictly followed.
2) External connection facilities for the sensor assembly of non connection head types shall be installed in an enclosure which affords it a degree of protection of at least IP20 and IP65(e).
3) When connecting the external connection facilities and the sensor assembly of non connection head types, adequate strain relief for the wiring shall be provided.

8-4. Applied standards

EN 60079-0 : 2012 Explosive atmosphere-Part 0 : General requirements(IEC 60079-0)
EN 60079-7 : 2007 Explosive atmospheres. Equipment protection by increased safety 'e'(IEC 60079-7)
EN 60079-11 : 2012 Explosive atmospheres-Part 11 : Equipment protection by intrinsic safety " i "