Metal tube flowmeter
Model : F824

Spec. sheet no. FD08-17

Description

It is suitable for the measurement in a high temperature and pressure depending on the flow rate. The float will assume a certain vertical position in the tube. The float position is transmitted by a magnetic coupling system to the scale.

Specification

Process connection
Flanged

Pressure rating
STD. 10 kgf/cm²
Max. 60 kgf/cm²

Size
15A ~ 200A

Temperature rating
STD. 120 °C
Max. 300 °C

Material
304SS
316SS
316L SS

Accuracy
±3.0 % of full scale

1. Base model

F824	Metal tube flowmeter

2. Flow direction type

D2	Bottom and top side

3. Line size

JIS	mm	ANSI	inch	DIN	mm
J015	15A	**A001**	½B	**D015**	15A
J020	20A	**A002**	¾B	**D020**	20A
J025	25A	**A003**	1B	**D025**	25A
J040	40A	**A004**	1½B	**D040**	40A
J050	50A	**A005**	2B	**D050**	50A
J065	65A	**A006**	2½B	**D065**	65A
J080	80A	**A007**	3B	**D080**	80A
J100	100A	**A008**	4B	**D100**	100A
J125	125A	**A009**	5B	**D125**	125A
J150	150A	**A010**	6B	**D150**	150A
J200	200A	**A011**	8B	**D200**	200A
XXXX	Other				

4. Flange rating and connection type

J010	JIS 10K
A010	ANSI 150 Lb
P010	PN10
XXXX	Other

5. Main material (See material table)

B	Body material / 304SS
C	Body material / 316SS
D	Body material / 316L SS
O	Other

6. Indicator and contact

LC	Local indicator
L1	Local indicator with 1-SPDT alarm
L2	Local indicator with 2-SPDT alarm
LS	Local indicator with current output (4~20 mA.DC)
LP	Local indicator with current output and pulse output
OH	Other

7. Option

NO	None

1	2	3	4	5	6	7
F824	**D2**	**A003**	**A010**	**B**	**LC**	**NO**

Sample ordering code

Flow chart

Size		H_2O flow rate (m^3/h)	Ranges		Pressure loss (mmH_2O)	Dimension (mm)		
			Liquid (m^3/h)	Gas (Nm^3/h)		M	N	L
15A	½B	0.1 ~ 1	0.02 ~ 0.2 0.2 ~ 2	0.6 ~ 6 3 ~ 30	600	390	80	735
20A	¾B	0.2 ~ 2	0.08 ~ 0.8 0.35 ~ 3.5	1.6 ~ 16 5 ~ 50	600	390	80	735
25A	1B	0.4 ~ 4	0.1 ~ 1 0.6 ~ 6	2 ~ 20 9 ~ 90	600	390	100	775
32A	1¼B	0.6 ~ 6	0.1 ~ 1 1 ~ 10	2 ~ 20 15 ~ 150	600	410	100	775
40A	1½B	0.8 ~ 8	0.2 ~ 2 1.5 ~ 15	4 ~ 40 20 ~ 200	800	410	100	775
50A	2B	1.5 ~ 15	0.5 ~ 5 2.5 ~ 25	6 ~ 60 40 ~ 400	800	470	120	845
65A	2½B	2.5 ~ 25	0.8 ~ 8 4 ~ 40	10 ~ 100 60 ~ 600	800	490	150	865
80A	3B	4.0 ~ 40	1.2 ~ 12 5 ~ 50	12 ~ 120 80 ~ 800	800	540	150	935
100A	4B	6.0 ~ 60	2.5 ~ 25 9 ~ 90	25 ~ 250 120 ~ 1,200	1,000	590	180	1,015
125A	5B	10 ~ 100	4 ~ 40 15 ~ 150	40 ~ 400 200 ~ 2,000	1,100	640	220	1,065
150A	6B	14 ~ 140	6 ~ 60 20 ~ 200	60 ~ 600 300 ~ 3,000	1,200	690	240	1,125
200A	8B	20 ~ 200	10 ~ 100 28 ~ 280	100 ~ 1,000 400 ~ 4,000	1,500	750	260	1,170

* When the size is larger than 65A, to be consulted with a maker

Material table

Part list	Material code		
	B	C	D
Body	304SS	316SS	316L SS
Flange	304SS	316SS	316L SS
Float	304SS	316SS	316L SS
Support	304SS	316SS	316L SS
Magnet rod	304SS + Alnico	316SS + Alnico	316L SS + Alnico
Stopper	304SS	316SS	316L SS
Taper tube	304SS	316SS	316L SS
Guide	304SS	316SS	316L SS
Cap	304SS		
Indicator	Aluminium		
Packing	NBR, Viton, Teflon		
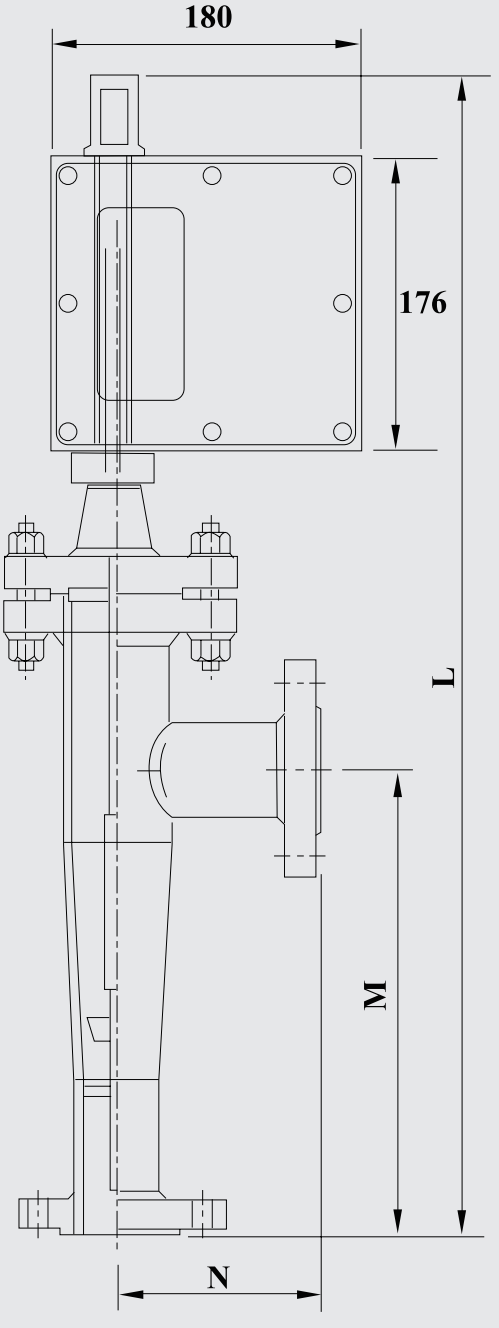
Dimension