3DA882 TRANSISTOR (NPN)

FEATURES

- Low Speed Switching
- Complement to 3CA772

TO – 126

1. BASE
2. COLLECTOR
3. EMITTER

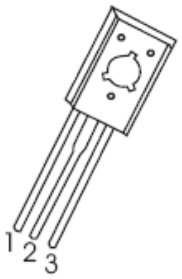

Equivalent Circuit

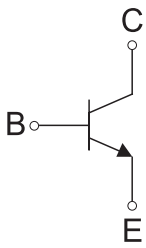

MAXIMUM RATINGS (T_a=25℃ unless otherwise noted)

Symbol	Parameter	Value	Unit
V_{CBO}	Collector-Base Voltage	40	V
V_{CEO}	Collector-Emitter Voltage	30	V
V_{EBO}	Emitter-Base Voltage	6	V
I_C	Collector Current	3	A
P_C	Collector Power Dissipation	1.25	W
$R_{\theta JA}$	Thermal Resistance From Junction To Ambient	100	℃/W
T_J,T_{stg}	Operation Junction and Storage Temperature Range	-55~+150	℃

T_a=25℃ unless otherwise specified

Parameter	Symbol	Test conditions	Min	Typ	Max	Unit
Collector-base breakdown voltage	$V_{(BR)CBO}$	I_C=100μA,I_E=0	40			V
Collector-emitter breakdown voltage	$V_{(BR)CEO}$	I_C=10mA,I_B=0	30			V
Emitter-base breakdown voltage	$V_{(BR)EBO}$	I_E=100μA,I_C=0	6			V
Collector cut-off current	I_{CBO}	V_{CB}=40V,I_E=0			10	μA
Collector cut-off current	I_{CEO}	V_{CE}=30V,I_B=0			10	μA
Emitter cut-off current	I_{EBO}	V_{EB}=6V,I_C=0			10	μA
DC current gain	h_{FE}^*	V_{CE}=2V, I_C=1A	60		400	
Collector-emitter saturation voltage	$V_{CE(sat)}^*$	I_C=2A,I_B=0.2A			0.5	V
Base-emitter saturation voltage	$V_{BE(sat)}$	I_C=2A,I_B=0.2A			1.5	V
Transition frequency	f_T	V_{CE}=5V,I_C=0.1A, f=10MHz	50			MHz

*Pulse test: pulse width ≤300μs, duty cycle≤ 2.0%.

CLASSIFICATION OF h_{FE}

RANK	R	O	Y	GR
RANGE	60-120	100-200	160-320	200-400

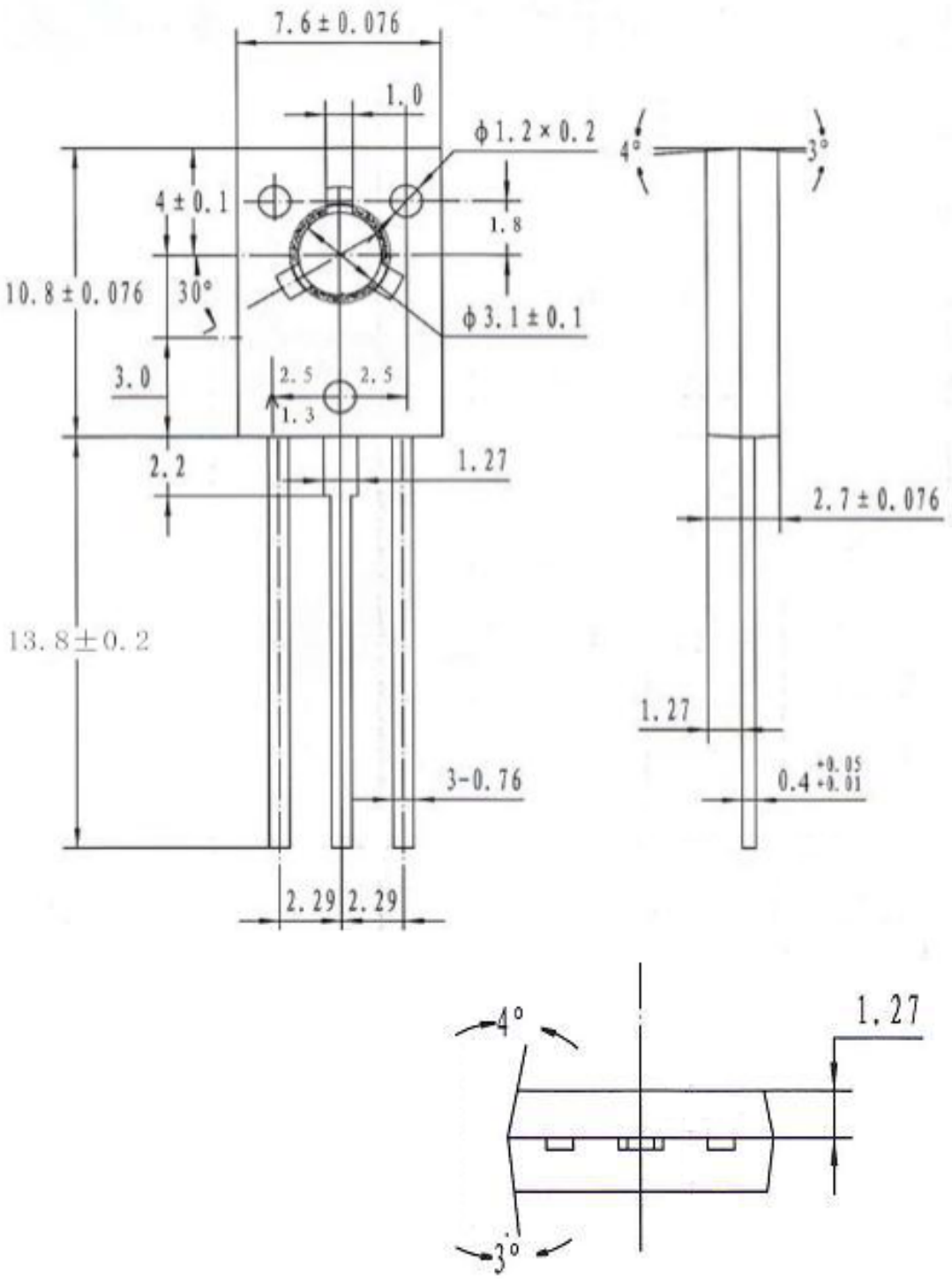
7.6±0.076
1.0
φ1.2×0.2
4±0.1
1.8
10.8±0.076
30°
φ3.1±0.1
3.0
2.5
2.5
1.3
2.2
1.27
13.8±0.2
3-0.76
2.29
2.29
4°
3°
2.7±0.076
1.27
0.4 +0.05 +0.01
4°
1.27
3°