BD034 TRANSISTOR (PNP)

FEATURES

- High Transition Frequency
- High Collector Current

TO – 126

1. EMITTER
2. COLLECTOR
3. BASE

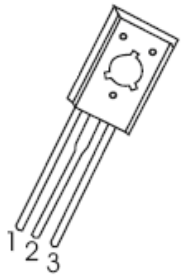

Equivalent Circuit

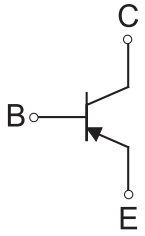

MAXIMUM RATINGS (T_a=25℃ unless otherwise noted)

Symbol	Parameter	Value	Unit
V_{CBO}	Collector-Base Voltage	-110	V
V_{CEO}	Collector-Emitter Voltage	-95	V
V_{EBO}	Emitter-Base Voltage	-7	V
I_C	Collector Current	-2.5	A
P_C	Collector Power Dissipation	1.25	W
$R_{\theta JA}$	Thermal Resistance From Junction To Ambient	100	℃/W
T_J,T_{stg}	Operation Junction and Storage Temperature Range	-55~+150	℃

T_a=25℃ unless otherwise specified

Parameter	Symbol	Test conditions	Min	Typ	Max	Unit
Collector-base breakdown voltage	$V_{(BR)CBO}$	I_C=-100μA,I_E=0	-110			V
Collector-emitter breakdown voltage	$V_{(BR)CEO}$	I_C=-10mA,I_B=0	-95			V
Emitter-base breakdown voltage	$V_{(BR)EBO}$	I_E=-100μA,I_C=0	-7			V
Collector cut-off current	I_{CBO}	V_{CB}=-100V,I_E=0			-1	μA
Emitter cut-off current	I_{EBO}	V_{EB}=-5V,I_C=0			-1	μA
DC current gain	$h_{FE(1)}$	V_{CE}=-2V, I_C=-100mA	100		560	
	$h_{FE(2)}$	V_{CE}=-2V, I_C=-1.5A	40			
Collector-emitter saturation voltage	$V_{CE(sat)}$	I_C=-2A,I_B=-200mA			-0.5	V
Base-emitter voltage	V_{BE}	V_{CE}=-5V, I_C=-500mA			-1	V
Transition frequency	f_T	V_{CE}=-1V,I_C=-250mA, f=1MHz	3			MHz

CLASSIFICATION OF $h_{FE(1)}$

RANK	R	S	T	U
RANGE	100-200	140-280	200-400	280-560

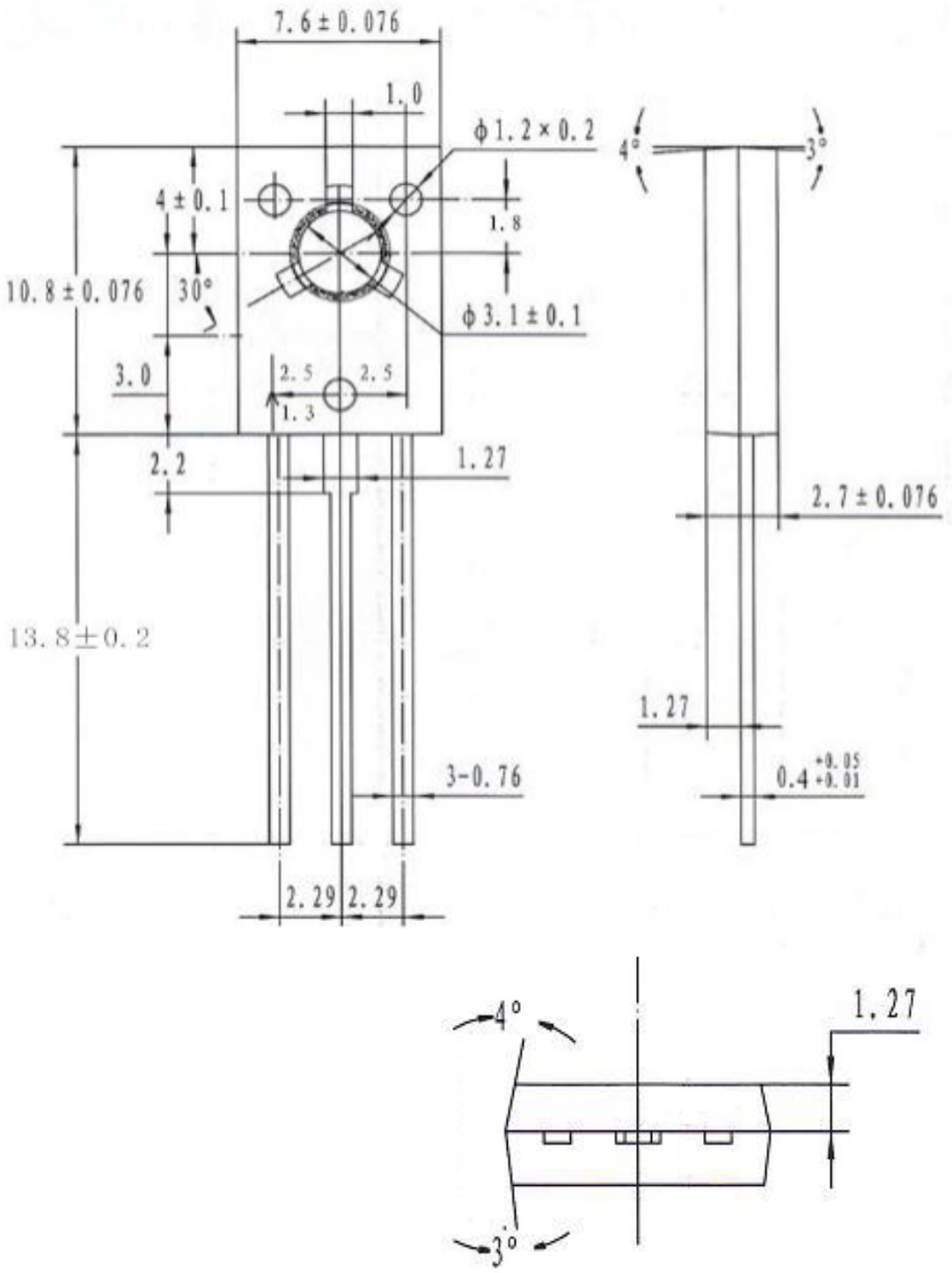
7.6±0.076
1.0
ϕ1.2×0.2
4°
3°
4±0.1
1.8
10.8±0.076
30°
ϕ3.1±0.1
3.0
2.5
2.5
1.3
2.2
1.27
2.7±0.076
13.8±0.2
1.27
3-0.76
0.4 +0.05 +0.01
2.29
2.29
4°
1.27
3°