C945 TRANSISTOR (NPN)

SOT-23

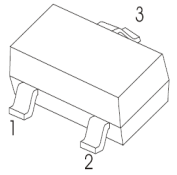

1. BASE
2. EMITTER
3. COLLECTOR

FEATURE

- Excellent h_{FE} Linearity
- Low noise
- Complementary to A733

MARKING:CR

MAXIMUM RATINGS (T_a=25℃ unless otherwise noted)

Symbol	Parameter	Value	Unit
V_{CBO}	Collector-Base Voltage	60	V
V_{CEO}	Collector-Emitter Voltage	50	V
V_{EBO}	Emitter-Base Voltage	5	V
I_C	Collector Current	150	mA
P_C	Collector Power Dissipation	200	mW
$R_{\Theta JA}$	Thermal Resistance From Junction To Ambient	625	℃/W
T_j	Junction Temperature	150	℃
T_{stg}	Storage Temperature	-55～+150	℃

ELECTRICAL CHARACTERISTICS (T_a=25℃ unless otherwise specified)

Parameter	Symbol	Test conditions	Min	Typ	Max	Unit
Collector-base breakdown voltage	$V_{(BR)CBO}$	I_C=100uA, I_E=0	60			V
Collector-emitter breakdown voltage	$V_{(BR)CEO}$	I_C=1mA , I_B=0	50			V
Emitter-base breakdown voltage	$V_{(BR)EBO}$	I_E=0.1mA, I_C=0	5			V
Collector cut-off current	I_{CBO}	V_{CB}=60V, I_E=0			0.1	uA
Emitter cut-off current	I_{EBO}	V_{EB}=5V , I_C=0			0.1	uA
DC current gain	$h_{FE(1)}$	V_{CE}=6 V , I_C=1mA	130		400	
	$h_{FE(2)}$	V_{CE}=6 V , I_C=0.1mA	40			
Collector-emitter saturation voltage	$V_{CE(sat)}$	I_C=100mA, I_B=10mA			0.3	V
Base-emitter saturation voltage	$V_{BE(sat)}$	I_C=100mA, I_B=10mA			1	V
Transition frequency	f_T	V_{CE}=6V,I_C=10mA,f =30 MHz	150			MHz
Collector output capacitance	C_{ob}	V_{CB}=10V,I_E=0,f=1MHz			3.0	pF
Noise figure	NF	VCE=6V,Ic=0.1mA Rg=10kΩ,f=1kMHz		4	10	dB

Static Characteristic

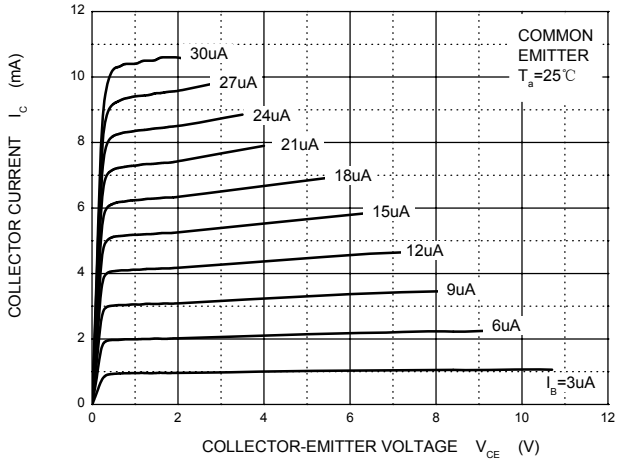

h_{FE} —— I_C

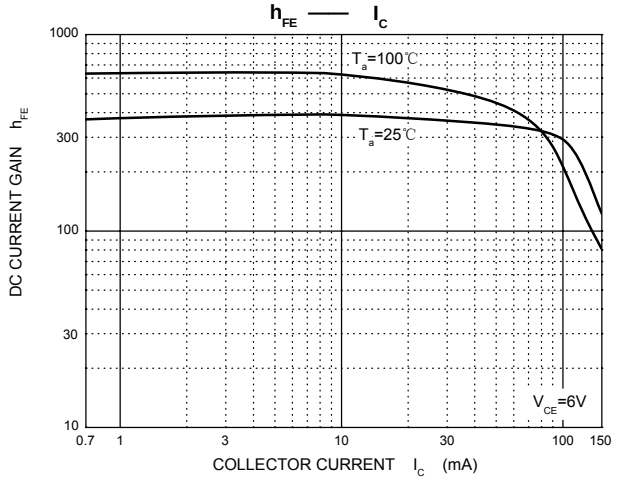

V_{CEsat} —— I_C

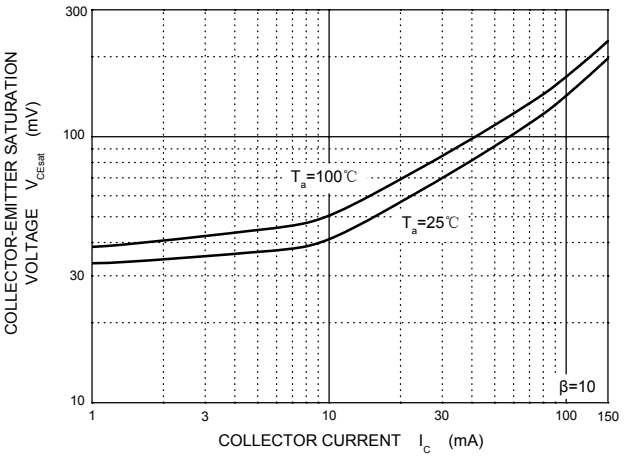

V_{BEsat} —— I_C

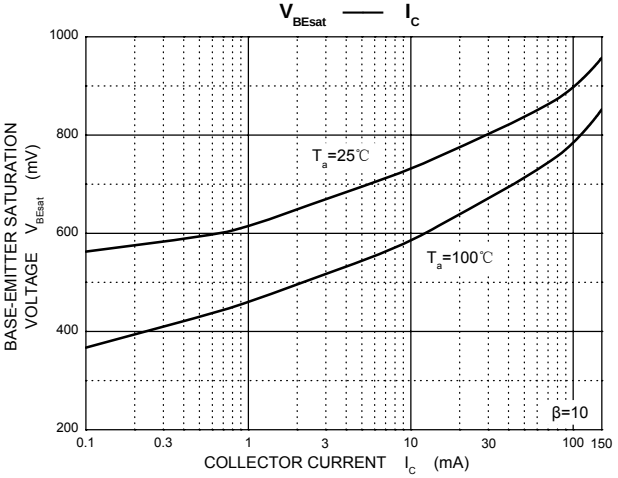

C_{ob} / C_{ib} —— V_{CB} / V_{EB}

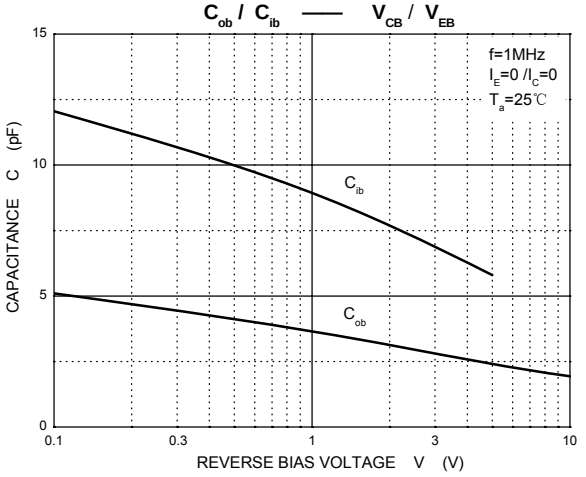

P_C —— T_a

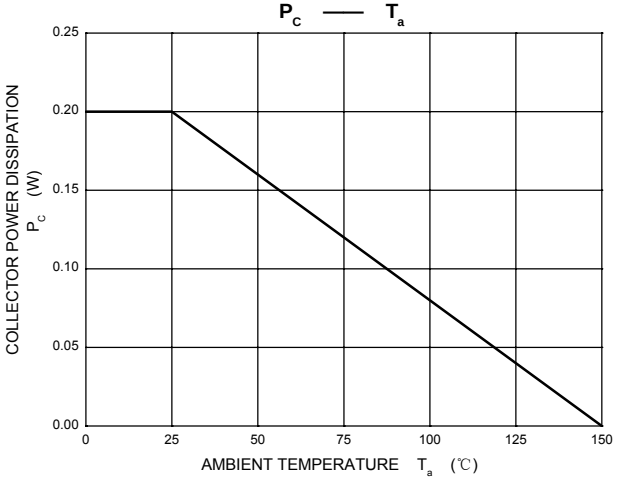

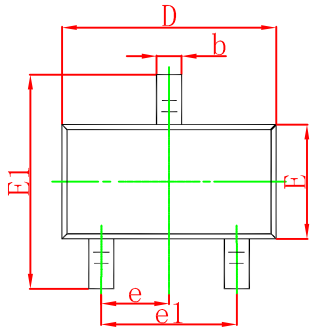

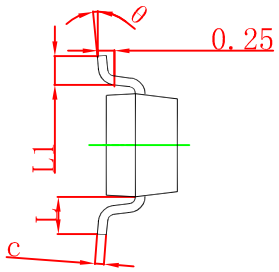

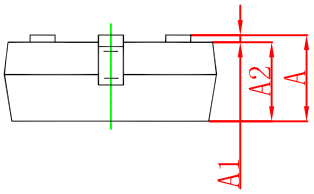

Symbol	Dimensions In Millimeters		Dimensions In Inches	
	Min	Max	Min	Max
A	0.900	1.150	0.035	0.045
A1	0.000	0.100	0.000	0.004
A2	0.900	1.050	0.035	0.041
b	0.300	0.500	0.012	0.020
c	0.080	0.150	0.003	0.006
D	2.800	3.000	0.110	0.118
E	1.200	1.400	0.047	0.055
E1	2.250	2.550	0.089	0.100
e	0.950 TYP		0.037 TYP	
e1	1.800	2.000	0.071	0.079
L	0.550 REF		0.022 REF	
L1	0.300	0.500	0.012	0.020
θ	0°	8°	0°	8°

SOT-23 Suggested Pad Layout

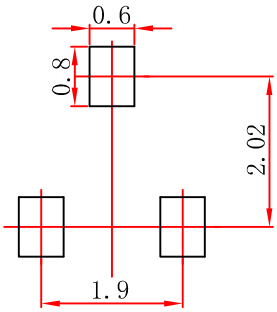

Note:
1.Controlling dimension:in millimeters.
2.General tolerance:± 0.05mm.
3.The pad layout is for reference purposes only.

SOT-23 Embossed Carrier Tape

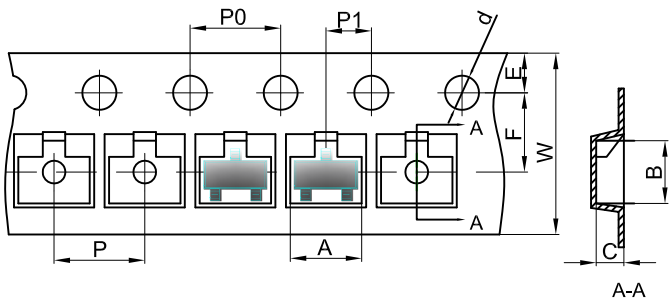

Packaging Description:

SOT-23 parts are shipped in tape. The carrier tape is made from a dissipative (carbon filled) polycarbonate resin. The cover tape is a multilayer film (Heat Activated Adhesive in nature) primarily composed of polyester film, adhesive layer, sealant, and anti-static sprayed agent. These reeled parts in standard option are shipped with 3,000 units per 7" or 17.8cm diameter reel. The reels are clear in color and is made of polystyrene plastic (anti-static coated).

Dimensions are in millimeter										
Pkg type	A	B	C	d	E	F	P0	P	P1	W
SOT-23	3.15	2.77	1.22	Ø1.50	1.75	3.50	4.00	4.00	2.00	8.00

SOT-23 Tape Leader and Trailer

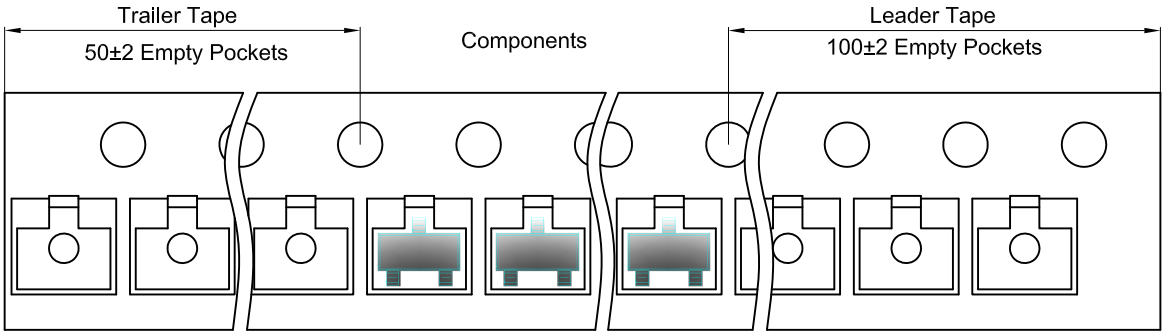

SOT-23 Reel

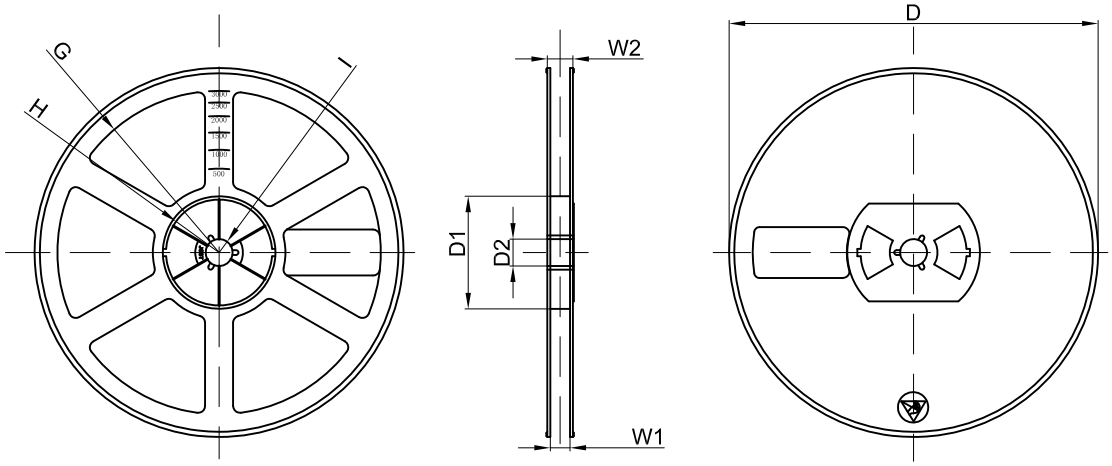

Dimensions are in millimeter								
Reel Option	D	D1	D2	G	H	I	W1	W2
7"Dia	Ø178.00	54.40	13.00	R78.00	R25.60	R6.50	9.50	12.30

REEL	Reel Size	Box	Box Size(mm)	Carton	Carton Size(mm)	G.W.(kg)
3000 pcs	7 inch	45,000 pcs	203×203×195	180,000 pcs	438×438×220	