LMFA22 Linear Motor

Electrical Specifications

	Symbol	Unit	LMFA22
Continuous force	F_c	N	409
Continuous current	I_c	A(rms)	2.7
Continuous force (WC)	$F_{c(wc)}$	N	819
Continuous current (WC)	$I_{c(wc)}$	A(rms)	5.4
Peak force (for 1 sec.)	F_p	N	1552
Peak current (for 1 sec.)	I_p	A(rms)	16.7
Force constant	K_f	N/A(rms)	151.6
Attraction force	F_a	N	2518
Max. winding temp.	T_{MAX}	℃	120
Electrical time constant	K_e	ms	7.2
Resistance (line to line at 25℃)	R_{25}	Ω	12.4
Resistance (line to line at 120℃)	R_{120}	Ω	16.4
Inductance (line to line)	L	mH	89.3
Pole pair pitch	2τ	mm	30
Back emf constant (line to line)	K_v	Vrms/(m/s)	87.5
Motor constant (at 25℃)	K_m	N/√W	35.2
Thermal resistance	R_{TH}	℃/W	0.53
Thermal resistance (WC)	$R_{TH(WC)}$	℃/W	0.13
Thermal time constant	t_{TH}	s	150
Minimum flow rate	-	L/min	4.0
Temperature of cooling water	-	℃	20
Pressure drop	ΔP	bar	1.83
Thermal switch	-		1 x KTY84-130 + 1 x (3 PTC SNM120 In Series)
Maximum velocity at maximum force	$V_{MAX,Fp}$	m/s	2.21
Maximum electric power input	$P_{EL,MAX}$	W	10304
Maximum dissipated heat output	$Q_{P,H,MAX}$	W	715
Stall force(WC)	F_0	N	573
Stall current(WC)	I_0	A(rms)	3.8
Max. DC bus voltage	-	V_{DC}	750

Mechanical Specifications

Mass of forcer	M_f	kg	5.5
Unit mass of stator	M_s	kg/m	9.8
Width of stator	W_s	mm	118
Length of stator/Dimension N	L_s	mm	120mm/N=2, 180mm/N=3, 300mm/N=5
Stator mounting distance	W_{s1}	mm	104
Total height	H	mm	50.5

F-V Curves

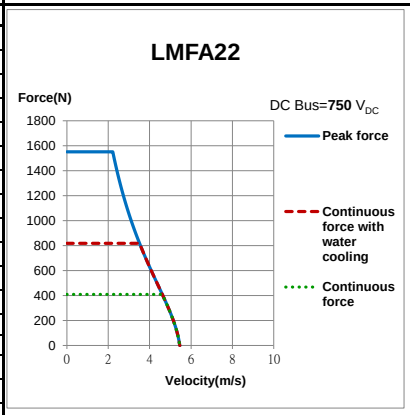

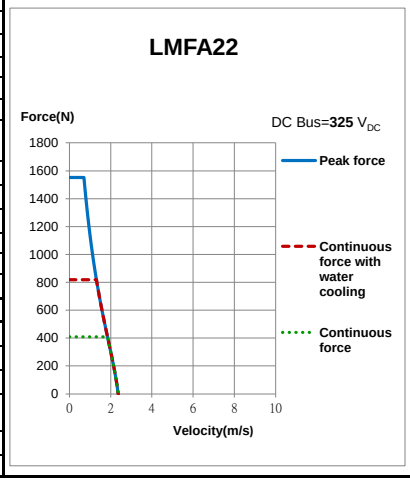

Optional Connector Type

Model：BEDC110NN00001216000

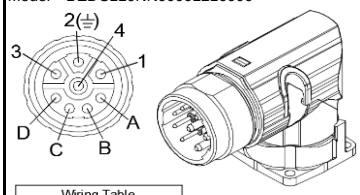

Wiring Table		
Male	Signal	
1	U	
4	V	
3	W	
2(⏚)	⏚	
Case		
A	T1+	PTC SNM120
B	T1-	
C	T2+	KTY 84-130
D	T2-	

Model：BKUA199NN0058020300

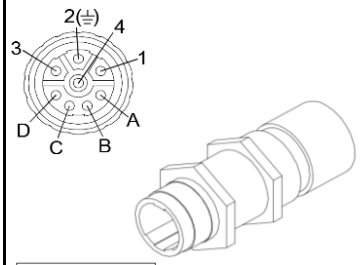

Wiring Table		
Male	Signal	
1	U	
4	V	
3	W	
2(⏚)	⏚	
Case		
A	T1+	PTC SNM120
B	T1-	
C	T2+	KTY 84-130
D	T2-	

Dimensions of forcer

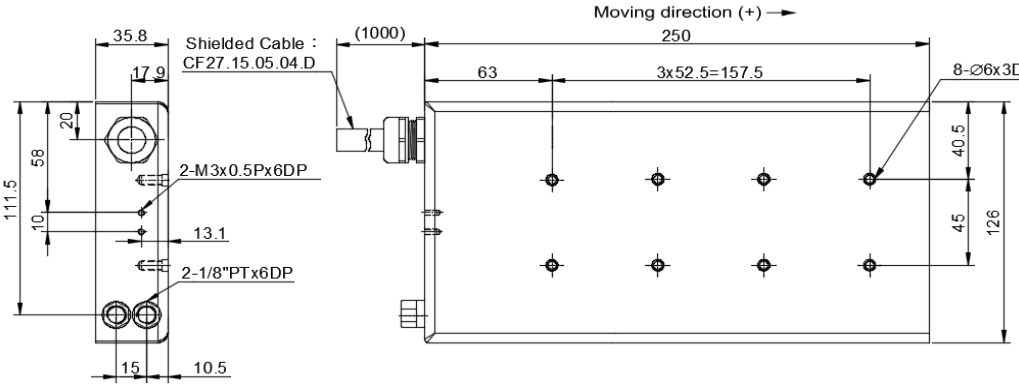

Number	Signal	
L1/U	U	
L2/V	V	
L3/W	W	
Y/G	⏚	
Shielding		
Red	T1+	PTC SNM120
Yellow	T1-	
Black	T2+	KTY 84-130
White	T2-	

Dimensions of stator

Cover for magnet (E：Epoxy ; None：Cover)

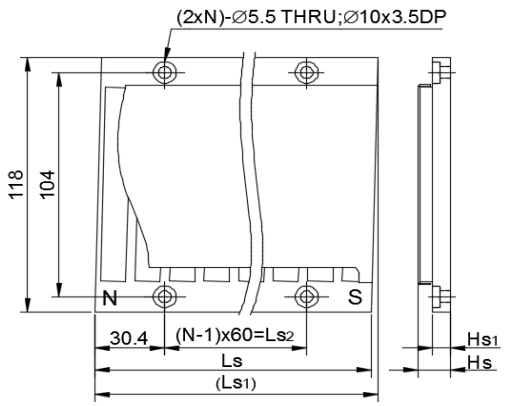

Type	Ls	Ls1	Ls2	N	Hs	Hs1
LMF2S1	120	123.09	60	2	13.8	7.9
LMF2S1E	120	123.09	60	2	13.3	7.7
LMF2S2	180	183.09	120	3	13.8	7.9
LMF2S2E	180	183.09	120	3	13.3	7.7
LMF2S3	300	303.09	240	5	13.8	7.9
LMF2S3E	300	303.09	240	5	13.3	7.7

Mounting tolerances

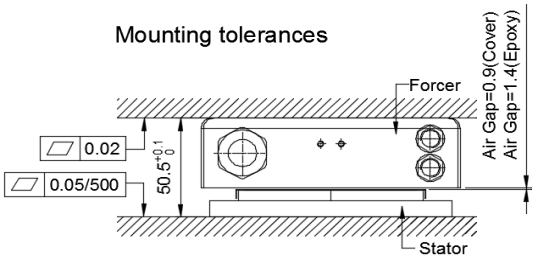

Note：WC－with water cooling and intake temperature of cooling water is 20℃.
LMFA forcer is collocated with LMF stator.
Except dimensions, all the electrical specifications in the table are in ±10% of tolerance.
The specifications in this catalog are subject to change without notification.

Version	1.1
Date	2017/1/18