LMFA43L Linear Motor

Electrical Specifications

	Symbol	Unit	LMFA43L
Continuous force	F_c	N	1484
Continuous current	I_c	A(rms)	12.8
Continuous force (WC)	$F_{c(wc)}$	N	2969
Continuous current (WC)	$I_{c(wc)}$	A(rms)	25.6
Peak force (for 1 sec.)	F_p	N	7810
Peak current (for 1 sec.)	I_p	A(rms)	79.3
Force constant	K_f	N/A(rms)	116.1
Attraction force	F_a	N	15435
Max. winding temp.	T_{MAX}	℃	120
Electrical time constant	K_e	ms	12.1
Resistance (line to line at 25℃)	R_{25}	Ω	0.9
Resistance (line to line at 120℃)	R_{120}	Ω	1.2
Inductance (line to line)	L	mH	11.0
Pole pair pitch	2τ	mm	46
Back emf constant (line to line)	K_v	Vrms/(m/s)	67.0
Motor constant (at 25℃)	K_m	N/√W	99.5
Thermal resistance	R_{TH}	℃/W	0.32
Thermal resistance (WC)	$R_{TH(WC)}$	℃/W	0.08
Thermal time constant	t_{TH}	s	150
Minimum flow rate	-	L/min	5.7
Temperature of cooling water	-	℃	20
Pressure drop	ΔP	bar	1.45
Thermal switch	-		1 x KTY84-130 + 1 x (3 PTC SNM120 In Series)
Maximum velocity at maximum force	$V_{MAX,Fp}$	m/s	4.01
Maximum electric power input	$P_{EL,MAX}$	W	42594
Maximum dissipated heat output	$Q_{P,H,MAX}$	W	1173
Stall force(WC)	F_0	N	2078
Stall current(WC)	I_0	A(rms)	17.9
Max. DC bus voltage	-	V_{DC}	750

Mechanical Specifications

Mass of forcer	M_f	kg	23.0
Unit mass of stator	M_s	kg/m	22.3
Width of stator	W_s	mm	180
Length of stator/Dimension N	L_s	mm	184mm/N=2，276mm/N=3，460mm/N=5
Stator mounting distance	W_{s1}	mm	161
Total height	H	mm	66.1

F-V Curves

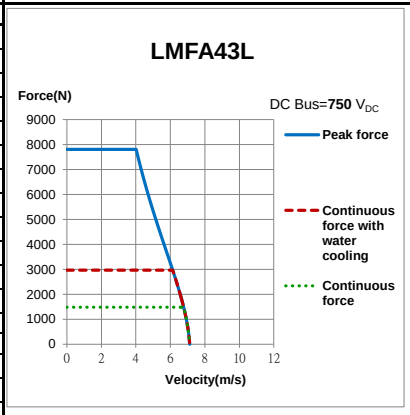

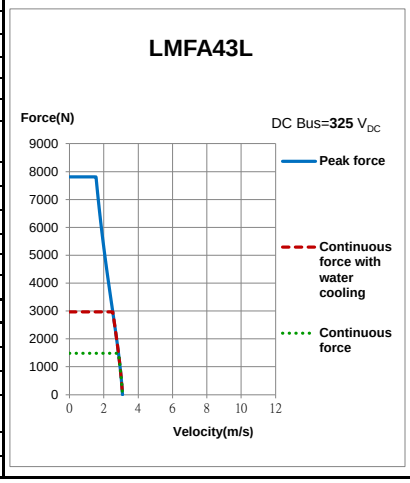

Optional Connector Type

Model：BEDC110NN00001216000

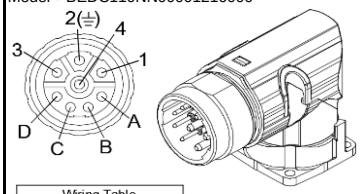

Wiring Table	
Male	Signal
1	U
4	V
3	W
2(⏚)	⏚
Case	
A	T1+
B	T1-
C	T2+
D	T2-

PTC SNM120

KTY 84-130

Model：BKUA199NN0059020300

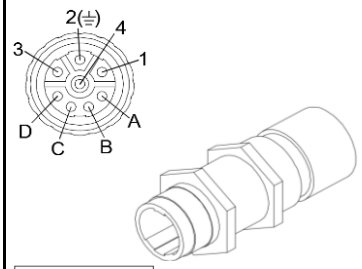

Wiring Table	
Male	Signal
1	U
4	V
3	W
2(⏚)	⏚
Case	
A	T1+
B	T1-
C	T2+
D	T2-

PTC SNM120

KTY 84-130

Dimensions of forcer

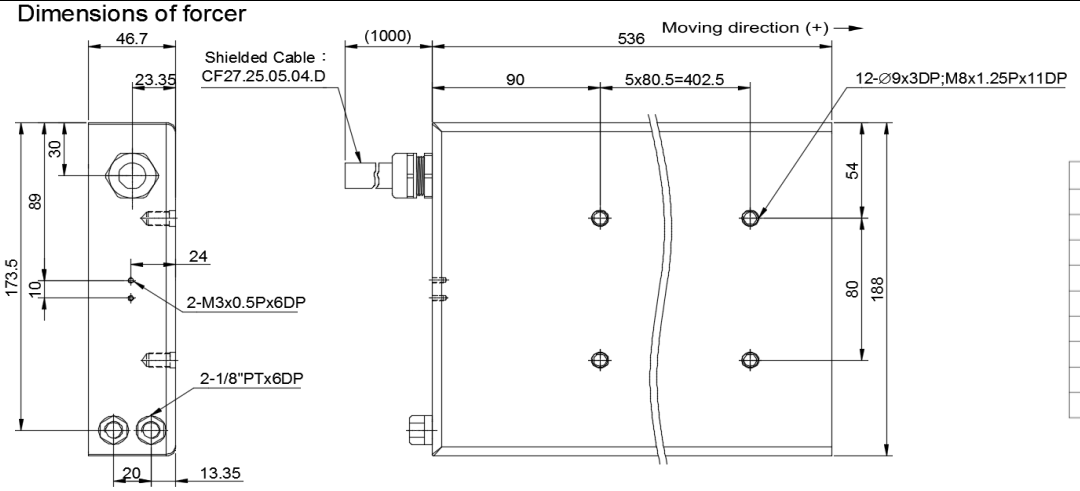

Number	Signal
L1/U	U
L2/V	V
L3/W	W
Y/G Shielding	⏚
Red	T1+
Yellow	T1-
Black	T2+
White	T2-

PTC SNM120

KTY 84-130

Dimensions of stator

Cover for magnet (E：Epoxy ; None：Cover)

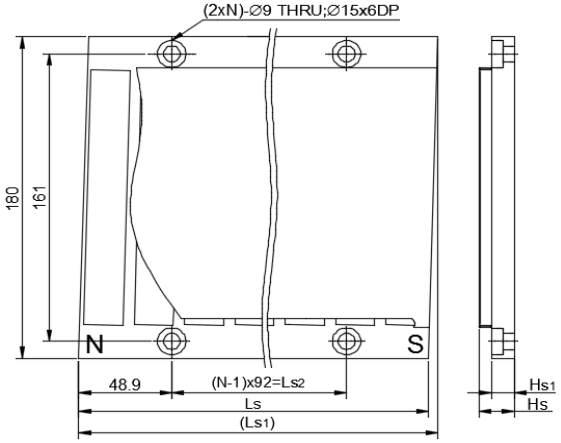

Type	Ls	Ls1	Ls2	N	Hs	Hs1
LMF4S1	184	189.03	92	2	18.5	12
LMF4S1E	184	189.03	92	2	18	11.8
LMF4S2	276	281.03	184	3	18.5	12
LMF4S2E	276	281.03	184	3	18	11.8
LMF4S3	460	465.03	368	5	18.5	12
LMF4S3E	460	465.03	368	5	18	11.8

Mounting tolerances

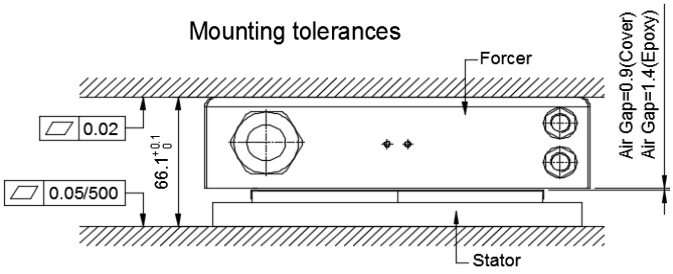

Note：WC－with water cooling and intake temperature of cooling water is 20℃.
LMFA forcer is collocated with LMF stator.
Except dimensions, all the electrical specifications in the table are in ±10% of tolerance.
The specifications in this catalog are subject to change without notification.

Version	2.2
Date	2017/1/19