PULSE STREAMER 快速指南

本文旨在帮助客户初步了解 PULSE STREAMER 的使用。 详细的参数和进一步的深入使用，请仔细查阅产品手册或联系相关工作人员。阅读本文前，请先查看《PULSE STREAMER 安装培训准备清单》并完成准备工作。在准备工作中，如果遇到任何问题，欢迎联系我们。

仪器连接

设备连接上电源和网线之后，设置网络连接：

```
# Example:
# using default hostname
ps = PulseStreamer('pulsestreamer')
# using fallback IP
ps = PulseStreamer('169.254.8.2')
```

软件操作

打开 Pulse Streamer 应用软件，双击设备 ID，

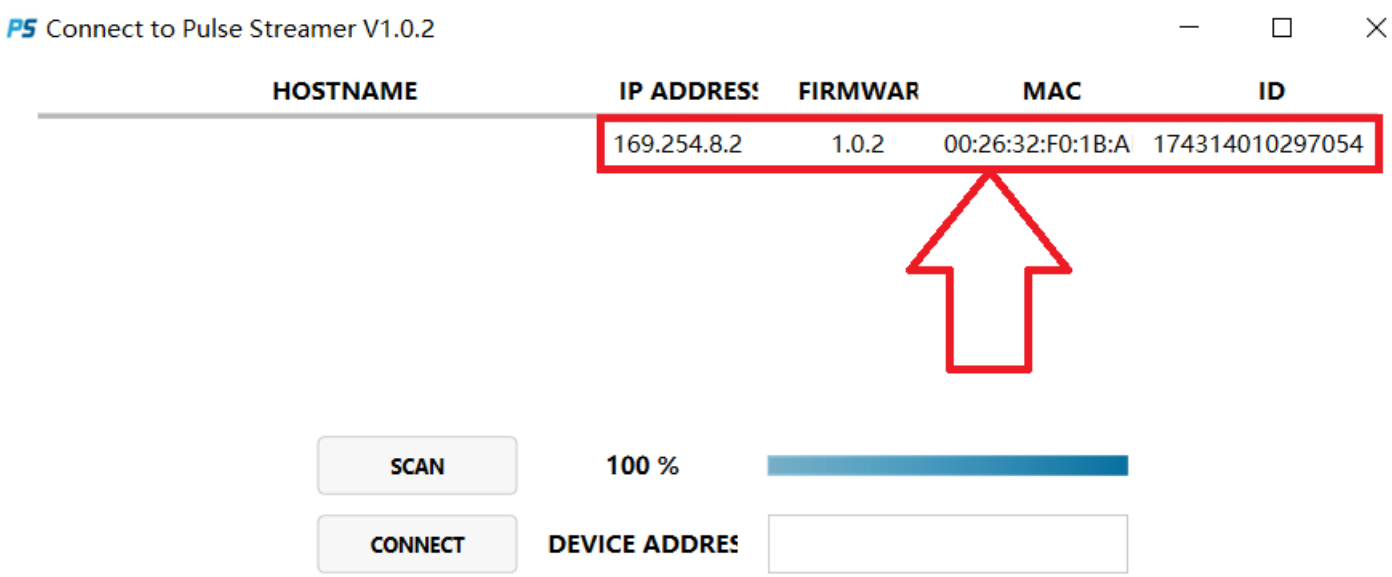

打开设置界面，如下图所示，在 STEADY STATE OUTPUT——FINAL STATE 中选择 Digital 0，在 Built-in 中的 DIGITAL 0 中选择 Pulse，点击上方的运行，此时 STATUS 中的指示灯将会变为 Streaming Output。最后，将仪器 Digital Out 0 接到示波器上观察输出的脉冲信号。

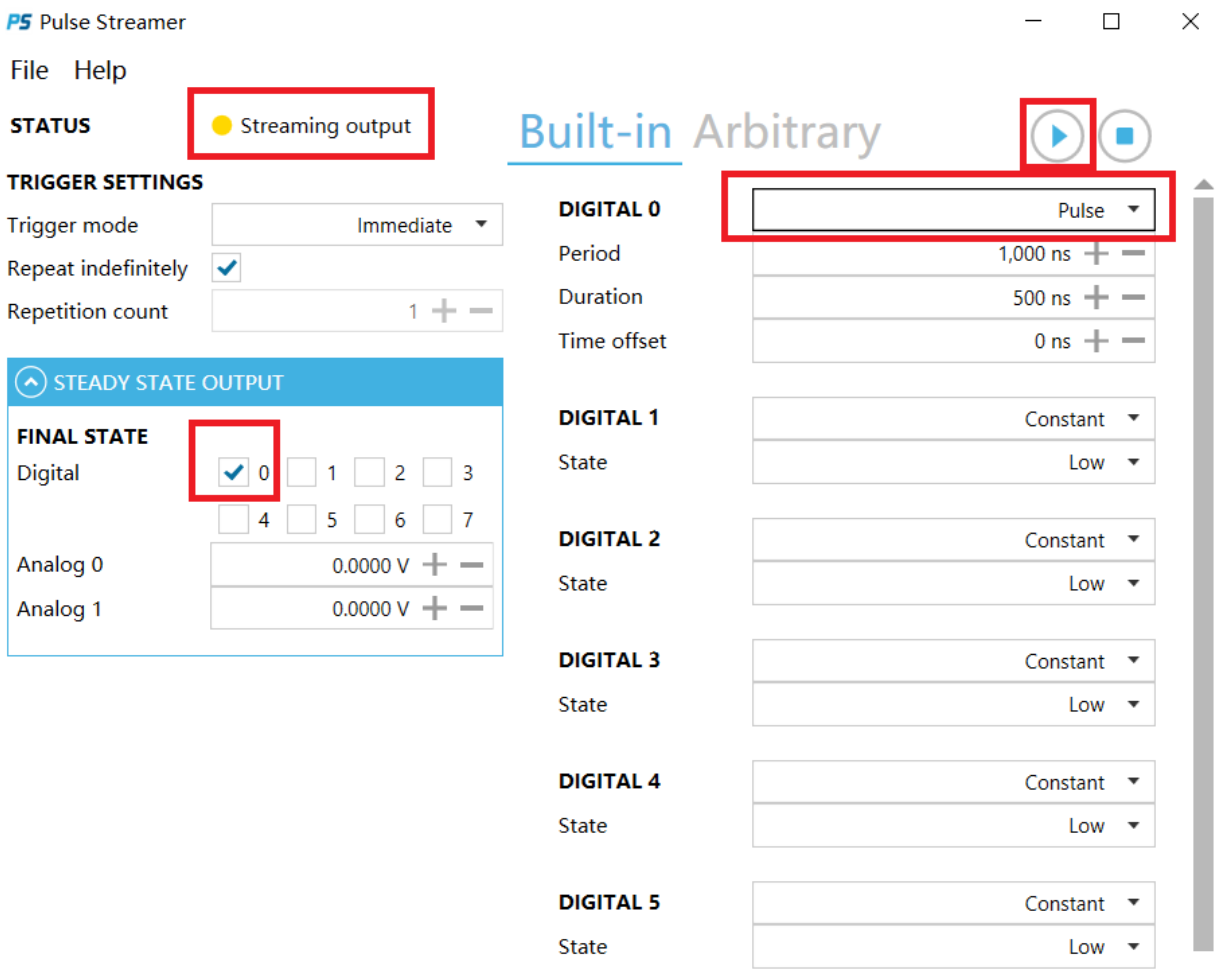
PS Pulse Streamer
File Help
STATUS
Streaming output
Built-in Arbitrary
TRIGGER SETTINGS
Trigger mode
Immediate
Repeat indefinitely
Repetition count
1
STEADY STATE OUTPUT
FINAL STATE
Digital
0 1 2 3
4 5 6 7
Analog 0
0.0000 V
Analog 1
0.0000 V
DIGITAL 0
Pulse
Period
1,000 ns
Duration
500 ns
Time offset
0 ns
DIGITAL 1
Constant
State
Low
DIGITAL 2
Constant
State
Low
DIGITAL 3
Constant
State
Low
DIGITAL 4
Constant
State
Low
DIGITAL 5
Constant
State
Low

简单信号生成

以下程序表示从 digital output 0 输出无限循环的单个脉冲信号。

Python

```
# import API classes into the current namespace
from pulsestreamer import PulseStreamer, Sequence
# A pulse with 10¸ts HIGH and 30¸ts LOW levels
pattern = [(10000, 1), (30000, 0)]
# Connect to Pulse Streamer
ip = 'pulsestreamer'
ps = PulseStreamer(ip)
# Create a sequence object
sequence = ps.createSequence()
# Create sequence and assign pattern to digital channel 0 sequence.setDigital(0, pattern)
# Stream the sequence and repeat it indefinitely
n_runs = PulseStreamer.REPEAT_INFINITELY
ps.stream(sequence, n_runs )
```

MATLAB

```
% import API classes into the current namespace
import PulseStreamer.*
% A pulse with 10¸ts HIGH and 30¸ts LOW levels
pattern = {10000, 1; 30000, 0};
% Connect to Pulse Streamer
ip = 'pulsestreamer';
ps = PulseStreamer(ip);
% Create a sequence object
sequence = ps.createSequence();
% Assign pulse pattern to digital channel 0
sequence.setDigital(0, pattern);
% Stream the sequence and repeat it indefinitely
n_runs = PulseStreamer.REPEAT_INFINITELY; % endless streaming ps.stream(sequence, n_runs)
```

LabVIEW

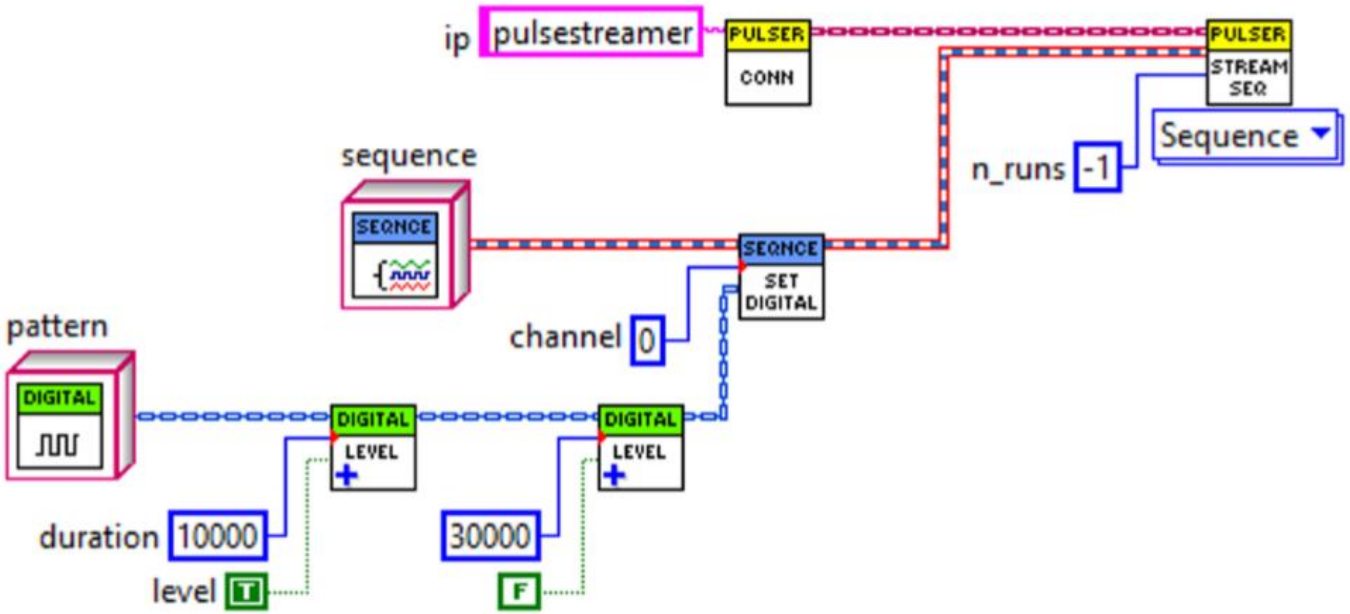
ip
pulsestreamer
PULSER
CONN
PULSER
STREAM SEQ
Sequence
n_runs
-1
sequence
SEQNCE
SEQNCE
SET DIGITAL
channel
0
pattern
DIGITAL
DIGITAL
LEVEL
DIGITAL
LEVEL
duration
10000
level
T
30000
F