TBW1系列

万能式断路器

云南通变电器有限公司

Yunnan Tongbian Electric Apparatus Co.LTD

Products Contents 产品目录

TBW1

TBW1系列智能型万能式断路器主要安装在低压配电柜中作主开关，用于控制和保护配电网络。达到了国际先进水平。

执行标准：IEC60947-2、GB14048.2等标准。

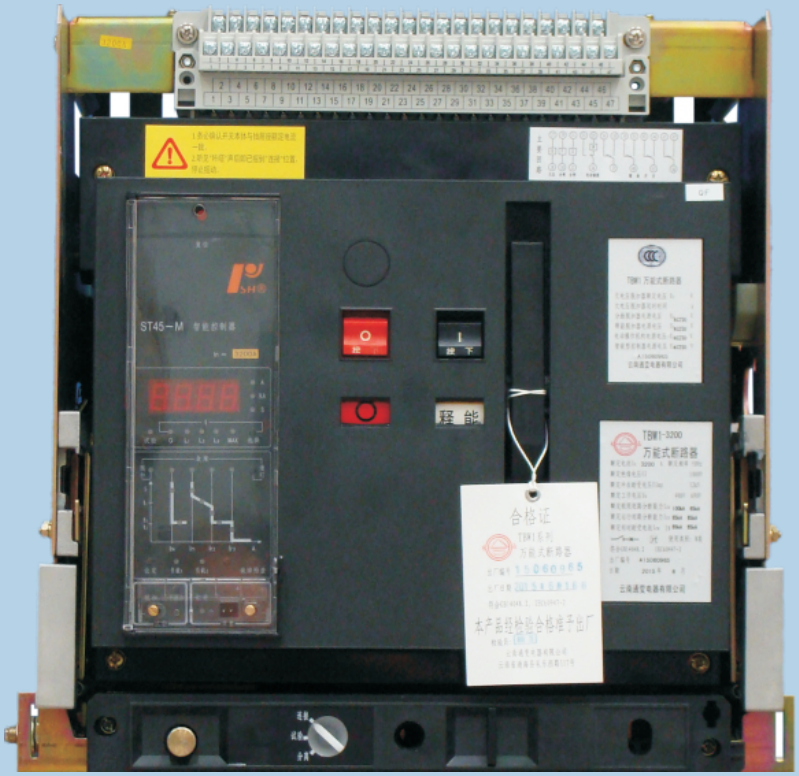

TBW1系列万能式断路器

TBW1 UNIVERSAL BREAKER SERIES

TBW1系列万能式断路器额定绝缘电压1000V，适用于交流50Hz，额定电流630A~6300A，额定工作电压400V、690V配电网络，用来分配电能和保护线路及电源设备免受过载、欠电压、短路、接地故障等危害。其技术性能及指标达到国际同类产品先进水平。产品可提供湿热带型（TH型）、低温至-40℃断路器。并可提供液晶显示及数码管显示断路器。

- 短路分断能力80kA～120kA（有效值）；
- 额定工作电压AC690V及以下（不适用于IT系统）；
- 使用类别B；
- 具有3极和4极；
- 抽屉式和固定式；
- 可倒进线安装
- 飞弧距离为零；
- 多种智能控制器，提供不同功能；
- 具有隔离功能，符号“ ”；
- 执行IEC60947-2、GBl4048.2标准；
- 断路器获国家强制性产品认证“CCC”标志。

The rated insulation voltage of TBW1 series universal breaker is 1000V, applicable for AC50Hz,rated current from 630A to 6300A, rated working voltage of 400V,690V electrical distribution net, to assign electrical energe and prevent circuits and power equipments from harmful overload, under voltage, short circuit, grounding fault, etc., its technical performance and targets acheive the advanced level of international similar type product .Products can provide hot and humid with(TH type), low temperature to -40 ℃ breaker,also can be provided LCD displayed type and LED displayed type.

- Short circuit Breaking Capacity 80kA~120kA(effective value)
- Rated working voltage 690V AC and below(ben't suit for IT system)
- Utiliz ation category B
- Three or four poles
- Draw-out or fixed type
- Can be in adverse direction
- Distance for arc is zero
- Varied Intelligent controller offering various function
- The breaker has disconnecting function , its corresponding symbol is shown as “ ”
- Comply with the following standards:IEC60947-2、GB 14048.2
- The breaker is permitted to use the CCC marking of CQC.

型号及含义 Type and Its Meaning

TB W 1 - □ /4

- /4 —— 极数(三极可不写出) Poles (omit for three poles)
- □ —— 断路器框架等级额定电流 Rated current of frame
- 1 —— 设计代号 Design code
- W —— 万能式断路器 Universal Breakers
- TB —— 云南通变电器有限公司 Yunnan TongBian Electric Apparatus Co.LTD

正常工作条件和安装条件 Environment Conditions For Operation And Installation

- 断路器可在周围空气温度-5℃～+40℃条件下运行（大于+40℃至+60℃见P10断路器降容系数）；
- 安装地点的海拔不超过2000m（超过2000m见P10高海拔降容）；
- 安装地点的空气相对湿度在最高温度为+40℃时不超过50%，在较低温度下可以有较高的相对湿度，最湿月的月平均最低温度不超过+25℃，该月的月平均最大相对湿度不超过90%，并考虑因温度变化发生在产品表面上的凝露；
- 污染等级为3级；
- 断路器主电路及欠电压脱扣器线圈、电源变压器初级线圈的安装类别为Ⅳ，其余辅助电路、控制电路安装类别为Ⅲ；
- 断路器适用于电磁环境A；
- 断路器应按使用说明书安装要求安装。断路器的垂直倾斜度不超过5°。
- 断路器应安装在无爆炸危险和无导电尘埃、无足以腐蚀金属和破坏绝缘的地方；
- 断路器安装在柜体小室内，且加装门框，防护等级达IP40。

- Ambient tempeature: -5 ℃ ~ +40℃ (See P10 If the tempera- ture is between +40℃ and +60℃, pleasesee "the circu it break ercapacity lower coefficient ").
- Elevation of installation site: ≤ 2000m(See P10 over 2000m altitude derating);
- Relative humidity: not exceeding 50% at the maximum ambient temperature of +40℃. With lower temperature, higher humidity would be permitted, but the lowest average temperature in a month not exceeding +25 ℃ during the most moist month, and the maximum monthly average relative humidity not exceeding 90% in that month, and giving consideration to the dews on the goods surface, which would appear due to temperature change.
- Pollution class: 3 rd grade.
- Installing categories: IV for breakers' main circuits, coils of under voltage release and primary circuit of transformers; III for other auxiliary circuits and control circuit.
- The breaker is suitablein electrom agneticen vironment A.
- The installation of breakers should be done as the relative article of operation instructions. The vertical gradient is less than 5°
- The breaker should be put in the place where there isn't a ny explosivemedium and conductive dust and no gas which wou ld corrode metal or distroy the in sulation.
- The breaker should be in stalled in compartment of switc h-boardanddoorframeshouldbefixedadditionally.Protect ion grade is up to IP40.

抽屉式结构 Structure of Draw-out Type

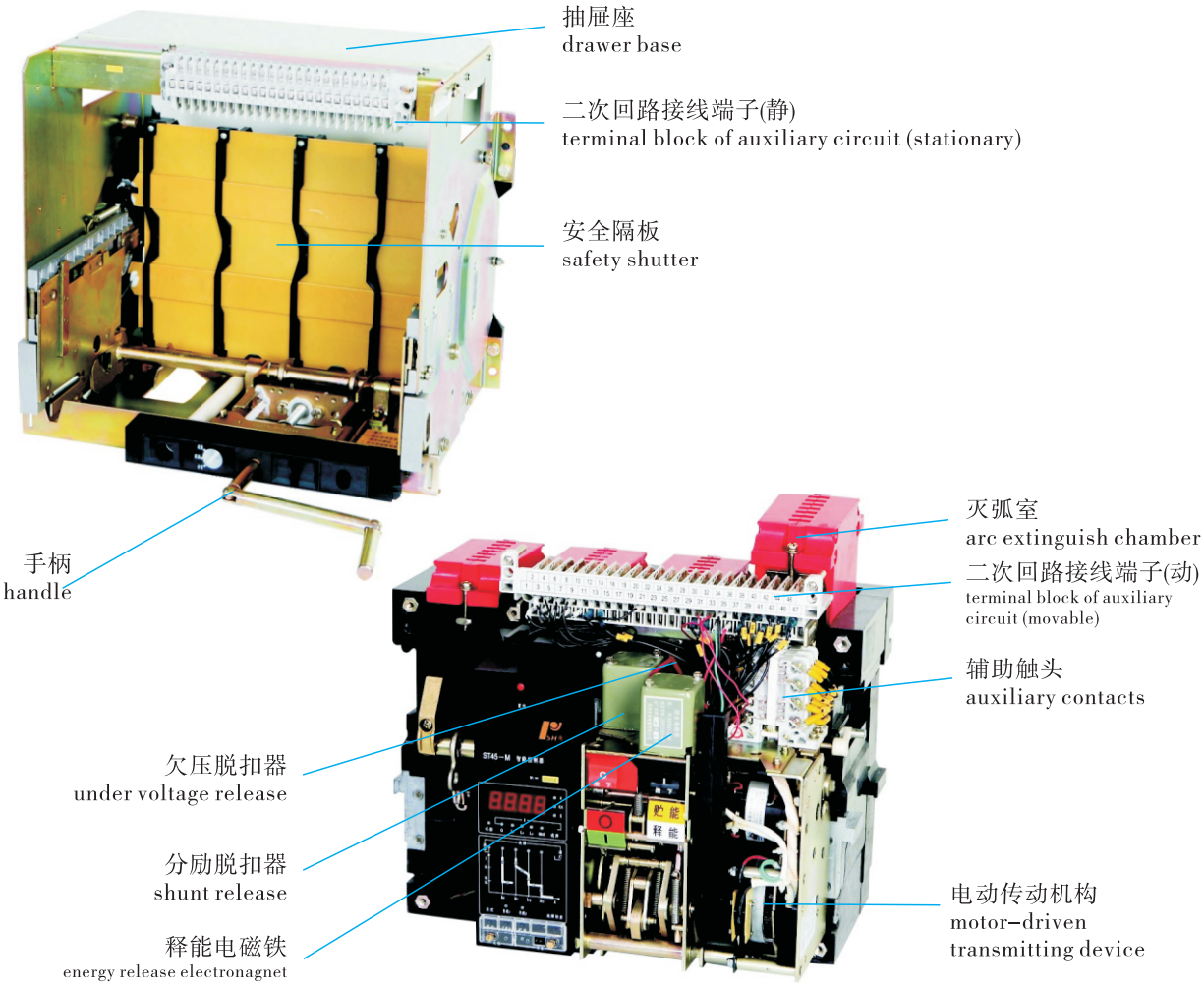

结构特点 Structure Feature

●断路器可分为固定式和抽屉式，固定式断路器由本体和支架组成，抽屉式断路器由本体和抽屉座组成。
●断路器本体由触头系统、灭弧系统、电动操作机构、智能型控制器、释能电磁铁、欠电压脱扣器、分励脱扣器和辅助开关等部件组成。具体规格详见“选型表”。
●抽屉座具有“连接”、“试验”、“分离”三个工作位置。
●根据需要，断路器还可以选配门框、相间隔板、“断开”锁定装置、机械联锁等附件。

●There are two types of breekey: freed, draw out, for fixed type breaker is composed of body and frame, for draw out type breaker is composed of body and drawer base.
● The breakor body is composed of contact system, are-exting wish system, motor-driuen operating meehunism,metllyent controcler, release magnet, under voltage release,shunt trip device, and awxiliary switeh, etc, detals shown in "Type selection form".
●The draner base has three posetion: conneeted, test,disconneeted.
● If necessary, can order door cover, partrtion plate between phases, "open" lock devie, mechanical interlock, etc.

更详细资料请索取并参考《使用说明书》
More details can be adked for, please refer to "Operation instractions".

智能型控制器功能 Intelligent Controller Function

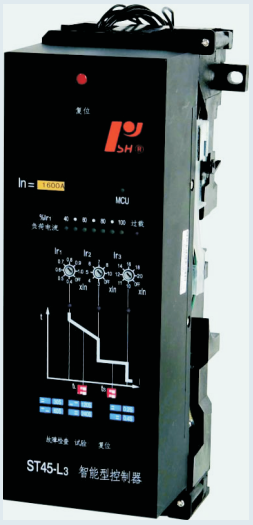

L基本功能
L Essential function

●过载长延时，短路短延时，短路瞬动保护
Overload long-time, short-circuit short time delay and short-circuit instantaneous

●故障状态指示
Fault trip display
●瞬动试验功能
Instantaneous test function
●MCU运行监视
MCU operating monitoring display
●负荷电流光柱指示
Load circuit light display
●过载热记忆功能
Overload heating memory function
●故障记忆功能
fault memory function

L选择功能
L Selecting function

●模拟脱扣及MCR保护
Imitative trip and MCR Protection
●单相接地或漏电保护
Single phase earth or leakage electric protection
●信号单元触点输出
Signal unit contact output

结构、功能 STRUCTURE, FUNCTION

M基本功能
M Essential function

●过载长延时，短路短延时，短路瞬动保护
Overload long-time, short-circuit short time delay and short-circuit instantaneous

●试验检查功能
Test checking function

●故障记忆功能
Fault memory function

●各种状态指示及数值显示功能
All kinds of state indicator and data display function

●电流表功能
Amperemeter display function

●热记忆功能
Thermal memory function

●单相接地保护
Single phase earth protection

M选择功能
M Selecting function

●模拟脱扣及MCR保护
Imitative trip and MCR protection

●负载监控保护
Load monitoring protection

●电压表功能
Voltage meter function

●信号单元触点输出
Signal unit contact output

●接地或漏电保护
earth or electricity leackage protection

2H基本功能
2H Essential function

●过载长延时，短路短延时，短路瞬动保护
Overload long-time, short-circuit short time delay and short-circuit instantaneous

●试验检查功能
Test checking function

●故障记忆功能
Fault memory function

●各种状态指示及数值显示
All kinds of state indicator and data display

●电流表功能
Amperemeter display function

●电压表功能
Voltage meter function

●功率表功能
Power meter function

●热记忆功能
Thermal memory function

●RS485通讯接口
RS485communication

●单相接地保护
Single phase earth protection

2H选择功能
2H Selecting function

●模拟脱扣及MCR功能
Imitative trip and MCR function

●负载监控保护
Load monitoring protection

●控制器自诊断功能及各种信号单元触点输出
Self-diagnostic function and signal unit contact out put

●接地或漏电保护
earth or electricity leackage

●MCR及HSISC保护
MCR protection and HSISC

●接地保护（缺省为T型）
Ground protection (default is T-shaped)

●中性相保护
Neutral phase protection

●八次故障记录
Eight fault records

●自诊断
Self-diagnosis

3M、3H基本功能
3M、3H Essential function

●负载监控保护
Load monitoring protection

●多曲线长延时保护
Multi-curve Long time delay protection

●多曲线短延时反时限保护
Multi-curve short delay inverse time protection

●短延时定时限保护
Short delay definite time protection

●瞬时保护
Instantaneous protection

●电流不平衡（断相）保护
Current unbalance (phase) protection

●接地报警
Grounding alarm

●四相电流及接地电流测量
Four-phase currents and earth current measurement

●八次报警记录
Eight alarm records

●触头当量
Contact equivalent

3M、3H选择功能
3M、3HSelecting function

●D(需量)

●U(电压)

●UD(电压+需量)

●P(功率)

●PD(功率+需量)

●H(谐波)

●HD(谐波+需量)

注：3M、3H型：按键调整、液晶显示(3H为通讯型，其他功能和3M一致)。

3M、3H智能控制器选择功能说明
3M, 3H Intelligent Controller Selection Function Description

D	U	UD	P	PD	H	HD
需用值测量(电流) Required value measurement (current)	电压测量 Voltage Measurement	电压测量 Voltage Measurement	电压测量 Voltage Measurement	电压测量 Voltage Measurement	电压测量 Voltage Measurement	电压测量 Voltage Measurement
需用值保护 Protection required value	频率测量 Frequency measurement	频率测量 Frequency measurement	频率测量 Frequency measurement	频率测量 Frequency measurement	频率测量 Frequency measurement	频率测量 Frequency measurement
	电压不平衡率测量 Voltage unbalance rate measurement	电压不平衡率测量 Voltage unbalance rate measurement	电压不平衡率测量 Voltage unbalance rate measurement	电压不平衡率测量 Voltage unbalance rate measurement	电压不平衡率测量 Voltage unbalance rate measurement	电压不平衡率测量 Voltage unbalance rate measurement
	相序检测 Phase sequence detection	相序检测 Phase sequence detection	相序检测 Phase sequence detection	相序检测 Phase sequence detection	相序检测 Phase sequence detection	相序检测 Phase sequence detection
	过压保护 Overvoltage Protection	电流需用值测量 Current value measurements required	功率测量 Power Measurement	功率测量 Power Measurement	功率测量 Power Measurement	功率测量 Power Measurement
	欠压保护 Undervoltage protection	过压保护 Overvoltage Protection	功率因数测量 Power factor measurement	功率因数测量 Power factor measurement	功率因数测量 Power factor measurement	功率因数测量 Power factor measurement
	电压不平衡保护 Voltage unbalance protection	欠压保护 Undervoltage protection	电能测量 Energy Measurement	电能测量 Energy Measurement	电能测量 Energy Measurement	电能测量 Energy Measurement
	过频保护 Over frequency protection	电压不平衡保护 Voltage unbalance protection	过压保护 Overvoltage Protection	需用值测量(电流、功率) Required value measurement (current, power)	谐波测量 Harmonic measurement	需用值测量(电流、功率) Required value measurement (current, power)
	欠频保护 Under Frequency Protection	过频保护 Over frequency protection	欠压保护 Undervoltage protection	过压保护 Overvoltage Protection	过压保护 Overvoltage Protection	谐波测量 Harmonic measurement
	相序保护 Phase sequence protection	欠频保护 Under Frequency Protection	电压不平衡保护 Voltage unbalance protection	欠压保护 Undervoltage protection	欠压保护 Undervoltage protection	过压保护 Overvoltage Protection
		相序保护 Phase sequence protection	过频保护 Over frequency protection	电压不平衡保护 Voltage unbalance protection	电压不平衡保护 Voltage unbalance protection	欠压保护 Undervoltage protection
		需用值保护 Protection required value	欠频保护 Under Frequency Protection	过频保护 Over frequency protection	过频保护 Over frequency protection	电压不平衡保护 Voltage unbalance protection
			相序保护 Phase sequence protection	欠频保护 Under Frequency Protection	欠频保护 Under Frequency Protection	过频保护 Over frequency protection
			逆功率保护 Reverse power protection	相序保护 Phase sequence protection	相序保护 Phase sequence protection	欠频保护 Under Frequency Protection
				逆功率保护 Reverse power protection	逆功率保护 Reverse power protection	相序保护 Phase sequence protection
				需用值保护 Protection required value		逆功率保护 Reverse power protection
						需用值保护 Protection required value

指标与特性 Parameters

型号Type			TBW1-2000						TBW1-3200				TBW1-6300		
框架等级额定电流(A) Rated Frame Current(A)			2000						3200				6300		
额定电流 In (A) Rated Current In (A)			630	800	1000	1250	1600	2000	2000	2500	3200	4000	4000	5000	6300
额定工作电压 Ue (V) Rated Working Voltage Ue (V)			AC50Hz 400、690												
额定绝缘电压 Ui (V) Rated Insulation Voltage Ui (V)			AC50Hz 1000												
额定冲击耐受电压 Uimp (V) Rated Impulse withstand Voltage Uimp (V)			12000												
工频耐受电压 U Power Frequency Withstand Voltage U			AC50Hz 3500V lmin												
极数 Quantity of poles			3、4	3、4	3、4	3、4	3、4	3、4	3、4	3、4	3、4	3	3、4	3、4	3
N极额定电流 In (A) Rated Current of N-pole In (A)			50%In 100%In										50%In		
额定极限短路分断能力Icu(kA)(有效值) Limited Short-circuit Breaking Capacify Icu (kA) (effective Value)		AC400V	80	80	80	80	80	80	100	100	100	100	120	120	120
		AC690V	50	50	50	50	50	50	65	65	65	65	75	75	75
额定运行短路分断能力Ics(kA)(有效值) Short-circuit Breaking Capacity in Operation Ics(kA)(effective Value)		AC400V	50	50	50	50	50	50	65	65	65	65	100	100	100
		AC690V	50	50	50	50	50	50	65	65	65	65	75	75	75
额定短路接通能力Icm(kA)(峰值) Rated Making Capacity of Short Circuit Icm (kA) peak		AC400V	176	176	176	176	176	176	220	220	220	220	264	264	264
		AC690V	105	105	105	105	105	105	143	143	143	143	165	165	165
额定短时耐受电流(1s)Icw(kA)(有效值) Rated withstand Current For Short-time (ls) Icw (kA) (effective)		AC400V	50	50	50	50	50	50	65	65	65	65	100	100	100
		AC690V	50	50	50	50	50	50	65	65	65	65	75	75	75
全分断时间(无附加延时)(ms) Full Breaking Time(no additional time delay)			25 ~ 30												
闭合时间(ms) Closing Time (ms)			最大70 max70												
操作性能 Operation Performance	电气寿命Electric Life	AC400V，690V	6500	6500	6500	6500	6500	6500	6000	6000	6000	6000	1000	1000	1000
	机械寿命 Mechanical Life	免维护 Maintainance-free	15000	15000	15000	15000	15000	15000	15000	15000	15000	15000	5000	5000	5000
		有维护 Maintainance needed	30000	30000	30000	30000	30000	30000	30000	30000	30000	30000	10000	10000	10000
外形尺寸 overall dimentions 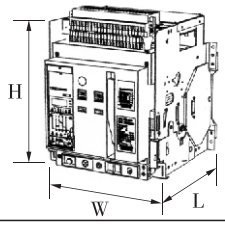	外形尺寸(mm) overall dimentions		H × W × L												
	抽屉式 Draw-out	3P	436 × 375 × 390						436 × 435 × 390			同a)	436 × 813 × 390		同b)
		4P	436 × 470 × 390						436 × 550 × 390 a)				436 × 928 × 390 b)		
	固定式 Fixed	3P	402 × 362 × 290						402 × 422 × 290						
		4P	402 × 457 × 290						402 × 539 × 290						

过载长延时反时限动作特性 Inverse Long-delay Action Feature For Over-load

整定电流调整范围Ir1 Adjusting area of setting current Ir1		L	(0.4 ~ 1.0)In+OFF按每级10%In递变调整 (0.4 ~ 1.0)In adjusting successively with 10% In for each step				
		M 2H	(0.4 ~ 1.0)In+OFF按每级2%In递变调整 (0.4 ~ 1.0)In adjusting successively with 2% In for each step				
电流允差 ± 10% 动作时间允差 ± 15% Allowable error of setting current ± 10% Allowable error of acting time ± 15%	电流Current	动作时间 Acting time					
	1.05Ir1	≥2h不动作 ≥2h no acting					
	1.30Ir1	≤1h动作 ≤1h acting					
	1.50Ir1 t1(s)	15	30	60	120	240	480
	2.00Ir1 T1(s)	8.4	16.9	33.7	67.5	135	270
	7.20Ir1 T1(s)	0.65	1.30	2.60	5.20	10.40	20.80
热记忆功能 Thermo-analogue Function		≤30min					
注：L型中t1无15、480挡 note:in the type of L without the item of 15、480 for t1							

短路短延时动作特性 Action Feature For Short-circuit short-delay

在低倍数电流时为反时限特性；当过载电流大于8Ir1时自动转换为定时限特性。短延时I^2t特性可“OFF”，此时转为定时限特性。

Reverse action feature in low current value; switch to definite action feature automatically when the over current is above 8Ir1; short-time action feature (I^2t) can be "OFF"; in this case turn into definite action feature.

整定电流调整范围Ir2 Adjusting area of setting current Ir2		L	(3 ~ 10)Ir1按3，4，5，6，7，8，10倍Ir1递变调整 (3 ~ 10)Ir1 adjusting successively in 3,4,5,6,7,8,10 times of Ir1				
		M 2H	(0.4 ~ 15)Ir1按每级4%Ir1递变调整 (0.4 ~ 15)Ir1 adjusting successively with 4% for each step				
电流允差 ± 10% 动作时间允差 ± 15% Allowable error of setting current ± 10% Allowable error of acting time ± 15%	电流 Current	动作时间 Acting time					
	I≥ Ir2, I ≤ 8Ir1	反限时+OFF Inverse time +OFF		$I^2T_2=(8I_{r1})^2t_2$			
	I≥ Ir2, I > 8Ir1	定时限 definite	整定时间t2(s) setting time t2(s)	0.1	0.2	0.3	0.4
			可返回时间(s) returnable time(s)	0.06	0.14	0.23	0.35
热记忆功能 Thermo-analogue Function		≤15min					
注：L型中定时限t2无0.1、0.3挡 note：for definite t2 of type L, without the item 0.1、0.3							

短路瞬时动作特性 Instantaneous Action Feature For Short-circuit

整定电流调整范围Ir3 电流允差 ± 15% Adjusting area of setting current Ir3 Allowable error of setting current ± 15%	L	(10 ~ 20) In (Inm 2000A) (7 ~ 14) In (Inm 3200A, Inm 6300A)
	M 2H	1.0In ~ 50kA (Inm 2000A) 1.0In ~ 75kA (Inm 3200A) 1.0In ~ 100kA (Inm 6300A) 按8%In级差递变调整 In adjusting successively with the step of 8% In

接地故障动作特性 Action Feature For Earthed Errors

整定电流调整范围Ir4 adjusting aree of setting current Ir4	L M 2H	(0.2~1)In (≤2%级差，最小160A) (0.2~1)In (≤2%difference of step, min 160A)				
电流允差 ± 10% 动作时间允差±15% allowable errer of setting current ± 10% allowable errer of actting time ± 15%	动作特性 pick-up char	在0.9 Ir4~1.1 Ir4之间动作 ≤0.9 Ir4不动作NO pick-up pick-up within 0.9 Ir4~l.l Ir4 >1.1 Ir 4延时动作Time delay pick-up				
	整定时间t4 (s) setting time t4 (s)	0.1	0.2	0.3	0.4	OFF
	可返回时间(s) returnable time (s)	0.06	0.14	0.23	0.35	只报警不分闸 Alarm but no open
注：L型中整定时间无0.1、0.3档 note: of type L, for setting time, without the tem of 0.1、0.3						

负载监控动作特性 Action Feature of Loading Monitor

方式一 Pattern 1	整定电流调整范围ILC1、ILC2 Adjusting area of setting current ILC1, ILC2 电流允差 ± 10% Allowable error of setting current ± 10%	(0.2~1.0)In按每级20A递变调整 (0.2~l.0)In adjusting successively with 20A for each step
	延时特性tc1、tc2 Delay feature tc1, tc2	反时限特性tc1=1/2 t1 tc2=1/4 t1 Inverse time feature tc1=1/2 t1 Inverse time feature tc2=1/4 t1
方式二 Pattern2	整定电流调整范围ILC1、ILC2 Adjusting area of setting current ILC1 ,ILC2 电流允差 ± 10% Allowable error of setting current ± 10%	(0.2~1.0)In按每级20A递变调整 (0.2~1.0)In adjusting successively with 20A for each step
	延时特性tc1、tc2 Delay feature tc1、tc2	反时限特性tc1=1/2 t1 Inverse time feature tc1=1/2 t1
		定时限特性tc2=60s Definite time feature tc2=60s
注：此特性用于M、2H型控制器中，L型控制器无此特性 note:This feature is used in the controller of type M、2H, but not for type L		

约定的制造厂出厂参数设定 Data adjusted by the manufacturer before delivery

除非用户特别提出，制造厂整定的智能型控制器参数见下表：

The data of the trip unit adjusted by the manufacturer are given in the following table,unless otherwise required by user:

型号 Model number	过载长延时整定 Long time settings		短路短延时整定 Short time settings		短路瞬时整定 instantaneous settings	接地故障保护整定 ground fault settings		负载监测整定 Load monitoring settings	
	Ir1	t1	Ir2	t2	Ir3	Ir4	t4	IrC1	IrC2
TBW1-2000	In	480s	6Ir1	0.2s	15In	0.8In或1200A （取最小值）	OFF	In	In
TBW1-3200	In	480s	6Ir1	0.2s	10In	0.6In或1600A （取最小值）	OFF	In	In
TBW1-6300	In	480s	6Ir1	0.2s	10In	2000A	OFF	In	In

断路器功耗、降容系数、高海拔降容

POWER CONSUMPTION、CAPACITY LOWER COEFFICIENT

功耗（环境温度+40℃） Power consumption (Ambient temp.+40℃)

型 号 Type	三极/四极功耗（W）Three poles/four poles	
	固定式Fixed Type	抽屉式Draw-out Type
TBW1-2000	307	452
TBW1-3200	550	877
TBW1-4000	649	898
TBW1-6300	1050	1200

功耗是在断路器通以壳架电流Inm情况下测量的总的损耗。
Power loss is the overall consunption measured with the breaker which is electrified with current Inm.

降容系数 Capacity Lower Coefficient

断路器降容系数 The circuit breaker capacity lower coefficient

环境温度 Environment temperature		+40℃	+45℃	+50℃	+55℃	+60℃
允许持续工作电流 Permission continual working current	2000A	1In	0.95In	0.9In	0.85In	0.8In
	4000A	1In	0.92In	0.86In	0.80In	0.74In
	3200A	1In	0.93In	0.87In	0.81In	0.75In
	6300A	1In	0.93In	0.87In	0.82In	0.75In

注: 周围空气温度与允许持续工作电流关系(在各种环境温度条件下,实测断路器进出线端温度达到110℃为基准)
Note: Relationship between ambient temperature and permission continual working current (Under each ambient temperature condition, basing on the circuit breaker inlet and outlet's acting temperature reaching 110)

高海拔降容 Capacity-reducing For High-elevation

海拔超过适用工作环境的2000m，断路器电气性能可参照下表修正：
If elevation exceeds work environment 2000m, electric property of circuit breaker can correct according to following table:

海拔（m） elevation	2000	3000	4000	5000
工频耐压(V) Power-frequency withstand voltage	3500	3150	2500	2000
工作电流修正系数 Correction factor of operational current	1	0.93	0.88	0.82

欠电压脱扣器 Undervoltage Release

- 欠电压脱扣器由脱扣器线圈和控制单元组成;
- 欠电压脱扣器动作分为瞬时动作和延时动作两种;
- 欠电压延时脱扣器延时时间常规分1s、2s、3s、5s四种，延时准确度 ± 10%。
- Theundervoltage releaseconsistsof release coil and control unit;
- The undervoltage release works in two ways: acting instantaneously andtime delay;
- There are four time delay specifications for the undervoltage timedelay release:1s,2s,3s,5s. Thetime–delay accur acyis ± 10%.

注：在雷雨多发地区或在供电电源电压不稳定的电网中，推荐使用带延时的欠电压脱扣器，可防止由于短时的电压降低而使断路器脱扣。延时时间一般为1s、2s、3s、5s，可供用户选择。

In the electrified wire netting where thurder and rain often happens or whose power supplyisnot stable, undervoltagerelease withtime delayis recommended to protect circuit breaker from releasing by transient voltage–lowering.Delay time is1s,2s,3s,5s. It is selectivebycustomers.

额定工作电压Ue(V) Rated working voltage	AC400 / AC230
动作电压(V) Operating voltage	(0.35~0.7)Ue
可靠合闸电压(V) Reliable closing voltage	(0.85~1.1)Ue
可靠不能合闸电压(V) Reliable impossible voltage	≤0.35Ue
功耗(VA) Power Consumption	14

分励脱扣器 Shunt Release

- 远距离使断路器分闸。
- They are available for operating remotely to break away.

额定控制电源电压Us(V) Rated voltage of control power supply / 功耗Power Consumption	AC400	AC230	DC220	DC110
	40VA	40VA	40W	40W
动作电压(V) Operating voltage	(0.7~1.1)Us			
分断时间(ms) Breaking time	25~30ms			

释能电磁铁 Energy Release Electronagnet

●电动机储能结束后，释能电磁铁能使操作机构的储能弹簧瞬间释放，断路器快速合闸。

●After the motor ended its energy stor ed,the closing electromagnet would make the charging spring to release its energy instantaneously,then to close the breaker quickly .

额定控制电源电压Us(V) Rated voltage of control power supply / 功耗Power Consumption	AC400	AC230	DC220	DC110
	40VA	40VA	40W	40W
动作电压(V) Operating voltage	(0.85~1.1)Us			
合闸时间(ms) Closing time	60~70ms			

电动传动机构 Motor-driven Transmitting Device

●断路器具有电动机储能及自动再储能功能。

●It has the functions of motor-driven to store energy and to restore energy automotively.

额定控制电源电压Us(V) Rated voltage of control power supply	AC400/AC230/DC220/DC110
动作电压(V) Operating voltage	(0.85~1.1)Us
功耗(VA/W) Power consumption	180
储能时间(s) Charging time	4~5s

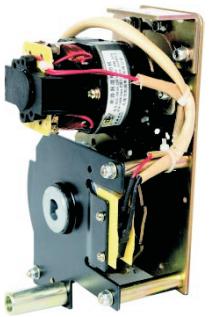

辅助触头 Auxialiary Switch

●额定值

●Rated Value

额定工作电压(V) Rated operational voltage / 额定控制容量(VA/W) Rated capacity	AC400	AC230	DC220	DC110
	300	300	60	60
约定发热电流Ith (A) Conventional thermal curren	6			
注：辅助触头标准型式为4组转换触头，特殊型式为6常开2常闭、2常开6常闭。 Note: For the normal type of auxiliary switch, there are four pairs of change-over contacts. they are of 6NO2NC, 2NO6NC.				

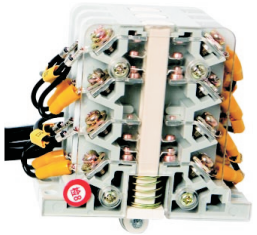

TBW1智能控制器过电流保护时间、电流特性曲线
Time-current Curves of Over-current Protection TBW1 Intelligent Controller

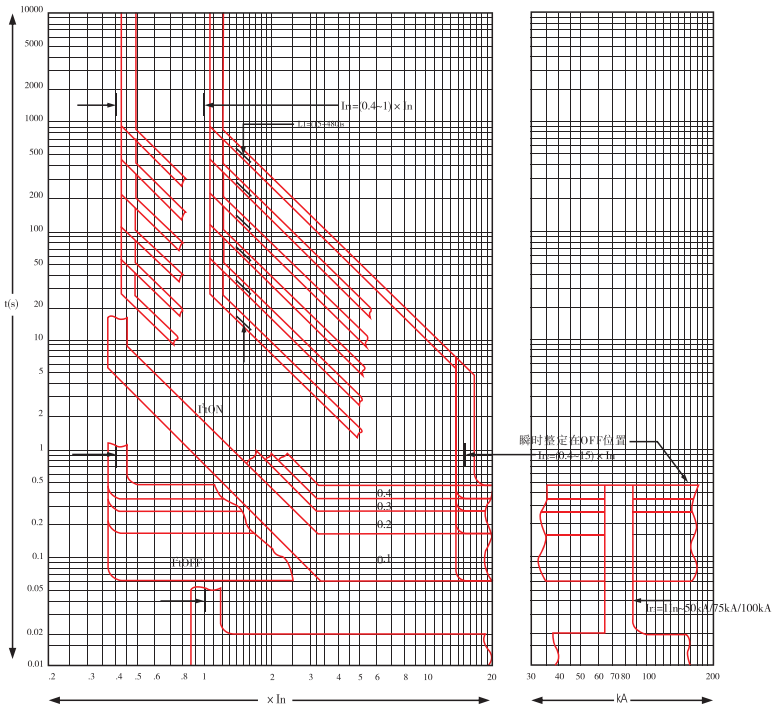

TBW1智能控制器接地故障保护时间、电流特性曲线
Time-current Curves of earth fault protection of TBW1 Intelligent controller

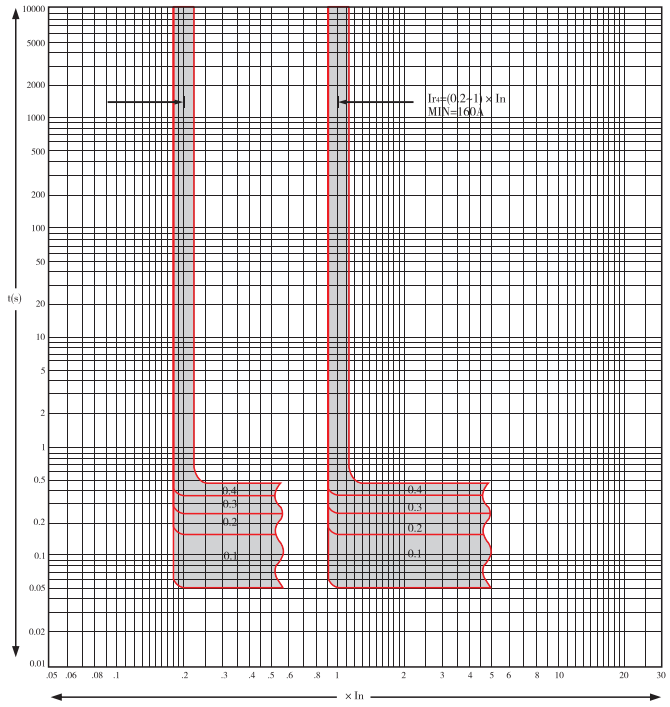

TBW1智能控制器负载监控时间、电流特性曲线（方式一）

Time-current Curves of the 1 st loading mornitor method of TBW1 Intelligent Controller

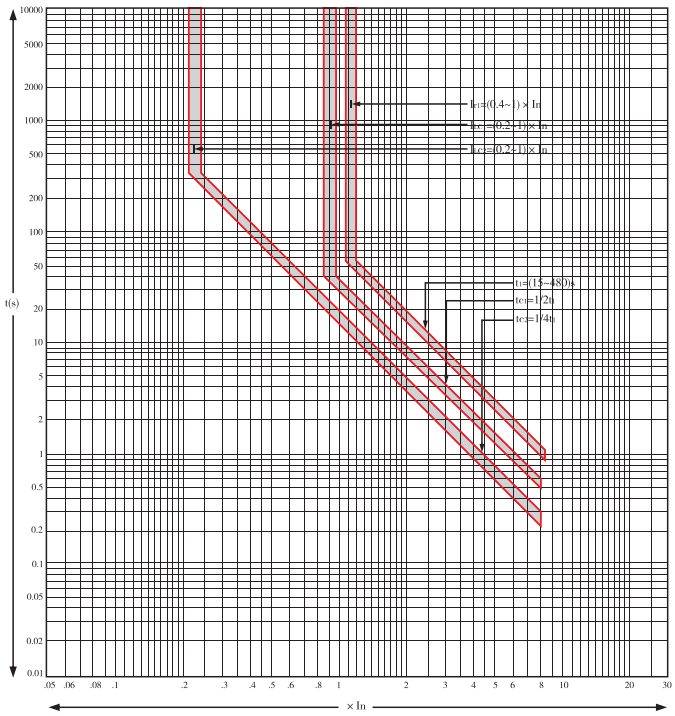

TBW1智能控制器负载监控时间、电流特性曲线（方式二）

Time-current Curves of the 2 nd loading mornitor method of TBW1 Intelligent Controller

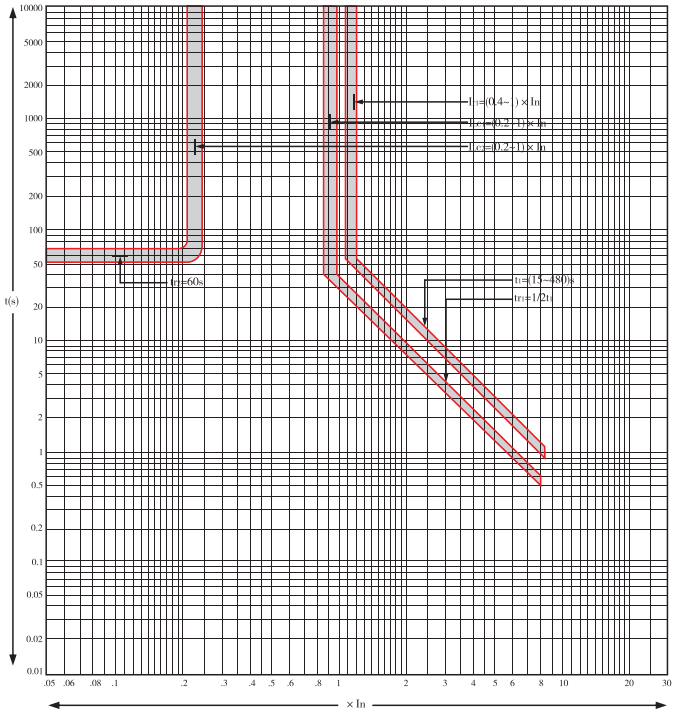

接地故障保护电路
EARTHED FAULT PROTECTION CIRCUIT

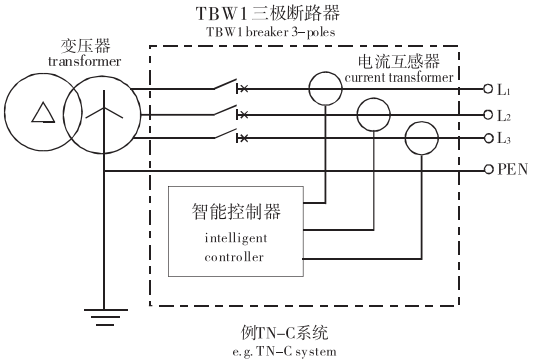

●TN-C、TN-C-S、TN-S配电系统中选用TBW1极断路器未接外接中性线N电流互感器
●接地故障保护信号只取三相电流的矢量和
●保护特性为定时限保护
●To select TBW1 three-poles breakers for TN-C、TN-C-S and TN-S distribution system, no current transformer of N pole equipped externally
●The ear thed fault protection signal only from sum of vectors of triphase current
●The protection feature is definite time protection

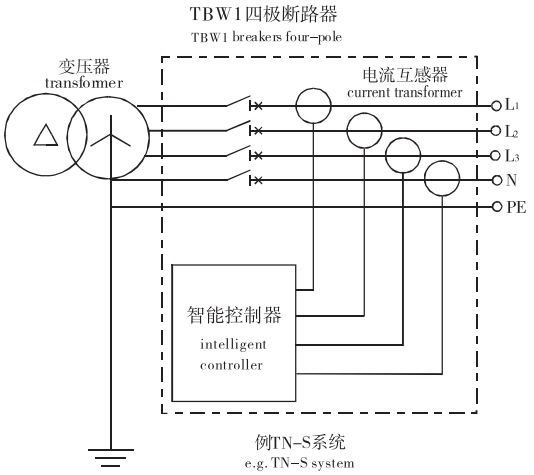

●TN-S配电系统中选用TBW1四极断路器
●接地故障保护信号取三相电流及N极电流的矢量和
●保护特性为定时限保护
●Toselect TBW1 four-polebreakers for TN-Sdistribution system.
●The earthed fault protection signal from sum of vectors of triphase currentand N-pole current.
●The protection feature is definite time protection

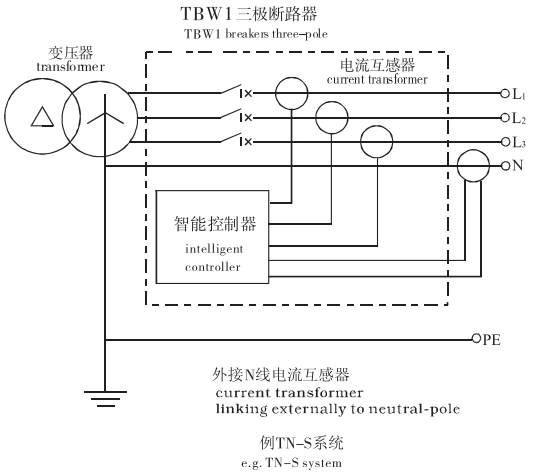

●TN-S配电系统中选用TBW1三极断路器
●外接中性线电流互感器作接地故障保护（用接25号、26号接线端子），互感器安装地点距离断路器最大为2米
●接地故障保护信号取三相电流及N相电流的矢量和
●保护特性为定时限保护
●To select TBW1 three-pole breakers for TN-S distribution system
●The current transformer,linking externally to N-pole, works for earthed fault protection(connected to terminals 25,26).The maximum distance from the place where the current transformer is mounted to breaker is 2 meters.
●The earthed fault protection signal only from sum of vectors of triphase current and N-pole current.
●The protection feature is definite time protection

注：图中电流互感器为有效值采样。

Note: current transformer in diagrams is r.m.s responsive.

TBW1-2000 抽屉式3极或4极外形及安装尺寸

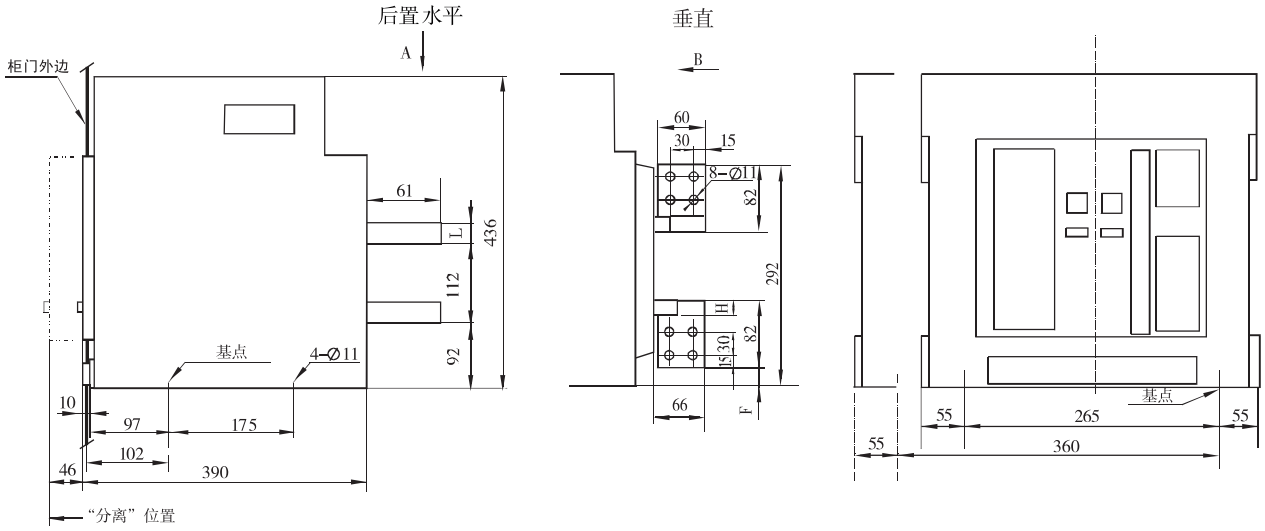

电流规格	L(mm)	H(mm)	F(mm)
2000A	20	20	20
1000－1600A	15	15	15
630－800A	10	15	15

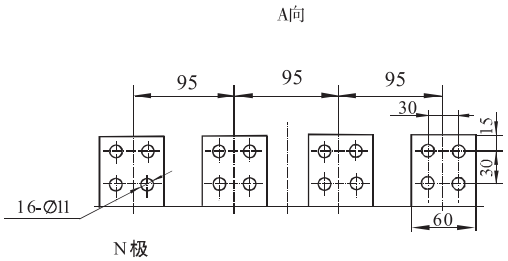

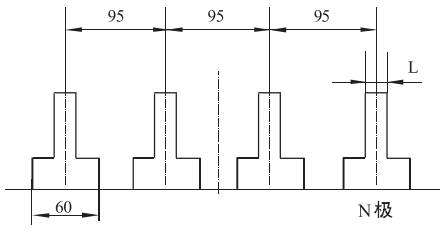

TBW1-2000 固定式3极或4极外形及安装尺寸

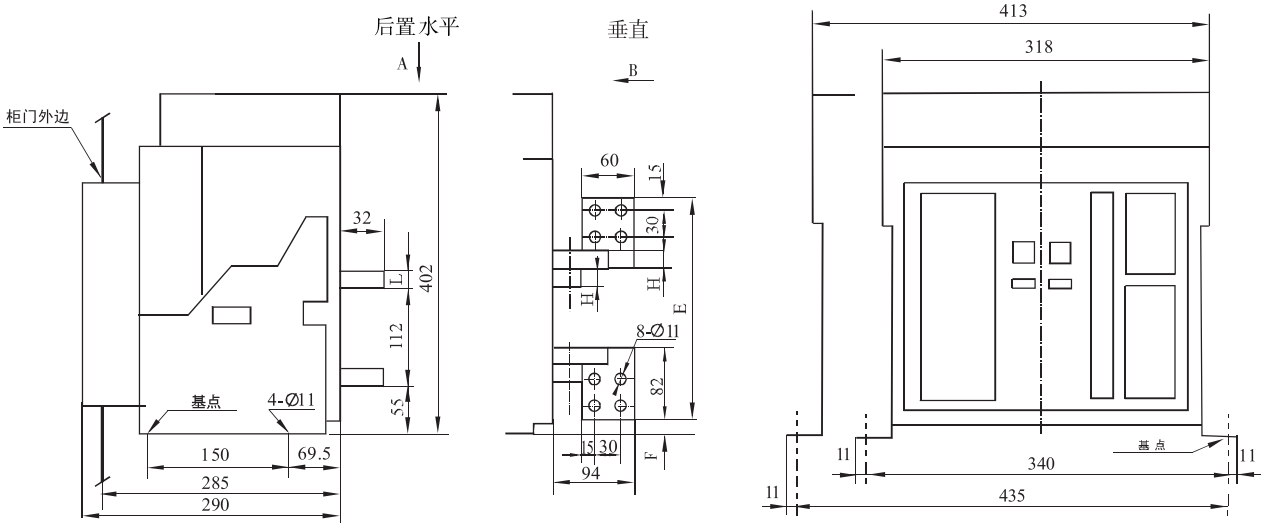

电流规格	L(mm)	H(mm)	E(mm)	F(mm)
2000A	20	20	269	13
1000－1600A	15	15	264	3
630－800A	10	15	264	3

A向

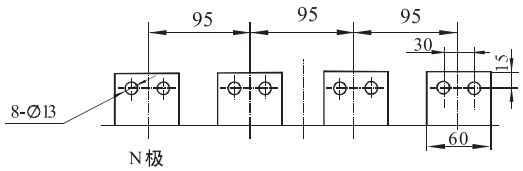

B向

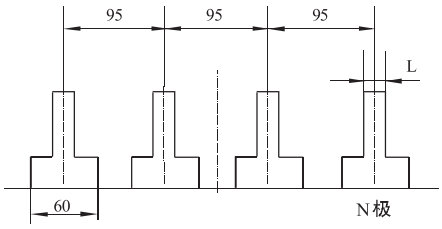

TBW1-3200 抽屉式3极或4极外形及安装尺寸

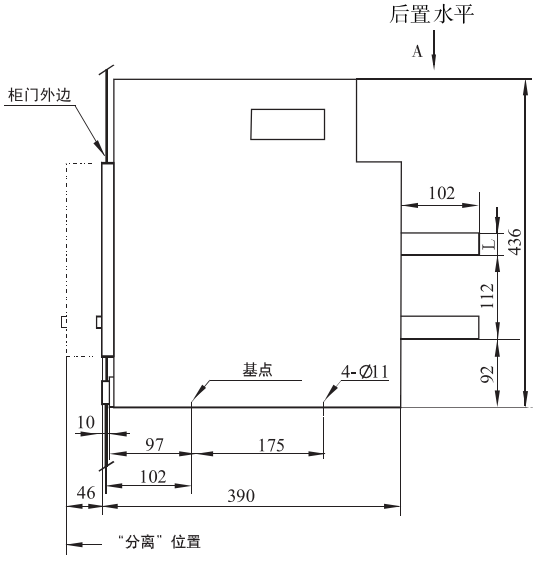

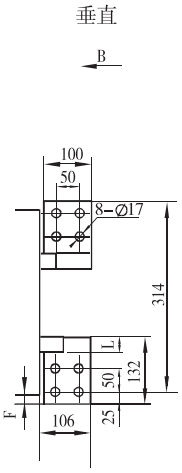

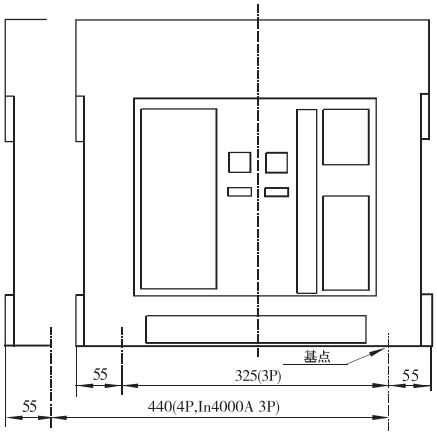

电流规格	L(mm)	F(mm)
4000A	30	0
3200A	30	0
2500A	20	10
2000A	20	10

A向 (In4000A 3P)

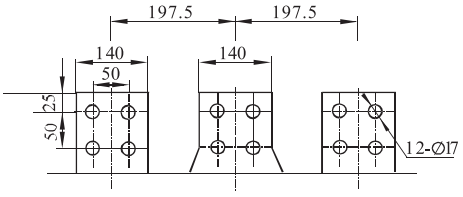

B向 (In2000—3200A)

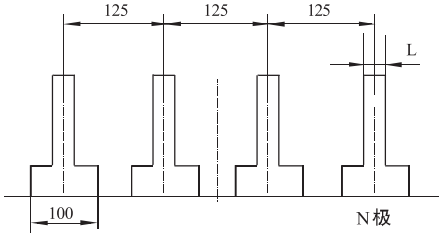

A向 (In2000—3200A)

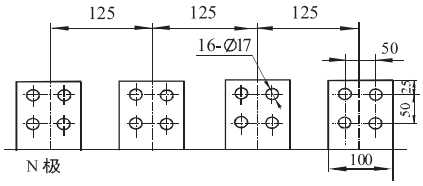

TBW1-3200 固定式3极或4极外形及安装尺寸

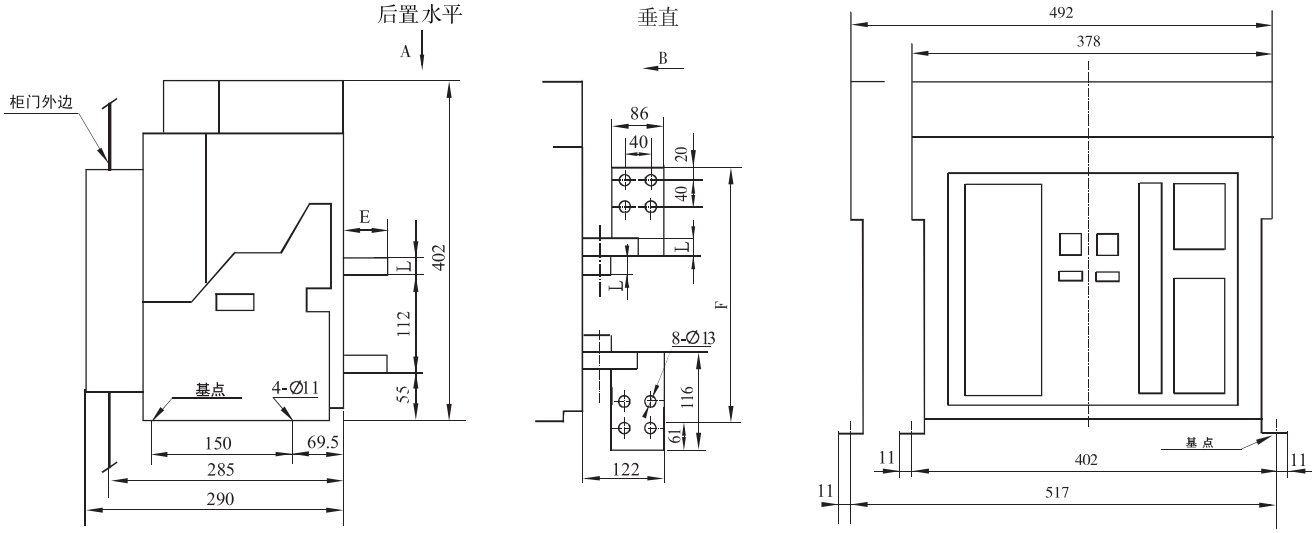

电流规格	L(mm)	F(mm)	E(mm)
3200A	30	311	32
2500A	20	301	32
2000A	20	301	32

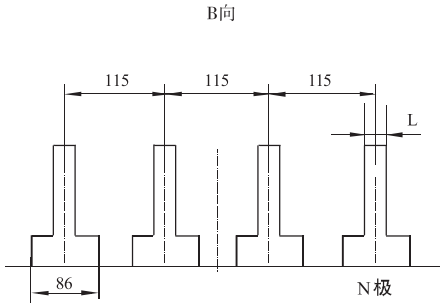

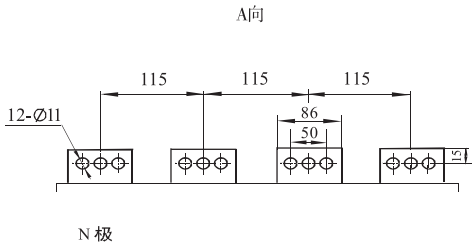

TBW1-6300 抽屉式3极或4极外形及安装尺寸

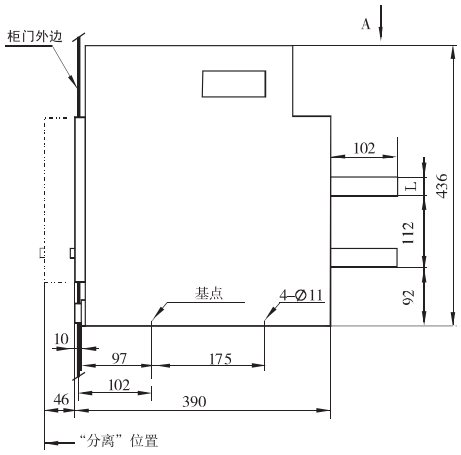

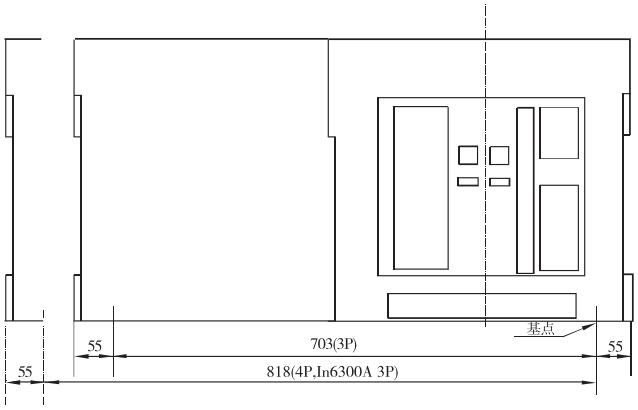

A向 (In4000A 5000A)

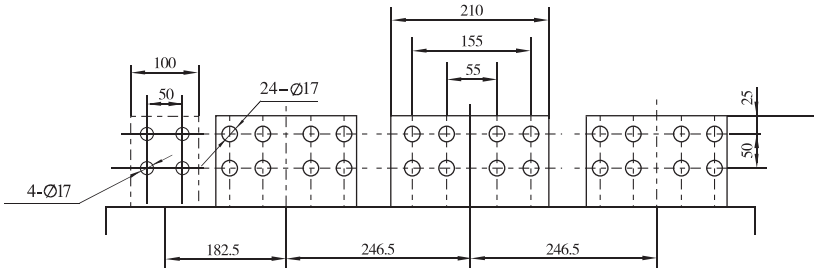

N极

电流规格	L(mm)
6300A	30
5000A	30
4000A	20

A向 (In6300A 3P)

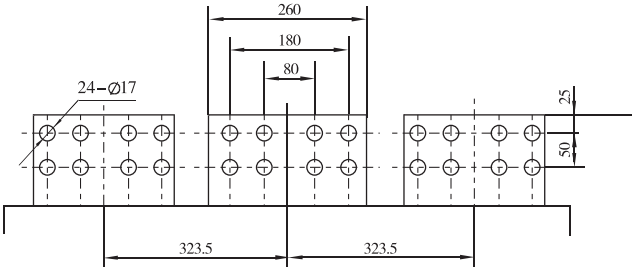

TBW1-2000 抽屉式3极或4极安装柜门开孔图

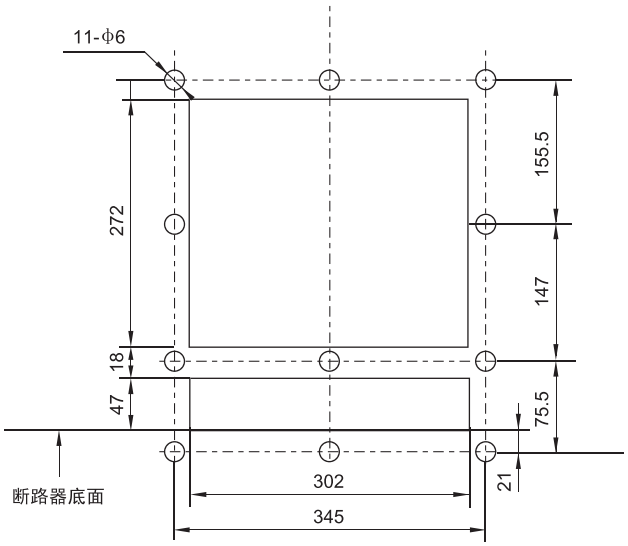

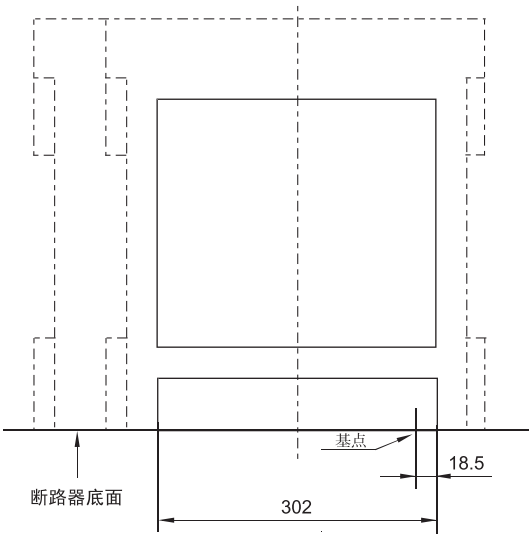

TBW1-2000 固定式3极或4极安装柜门开孔图

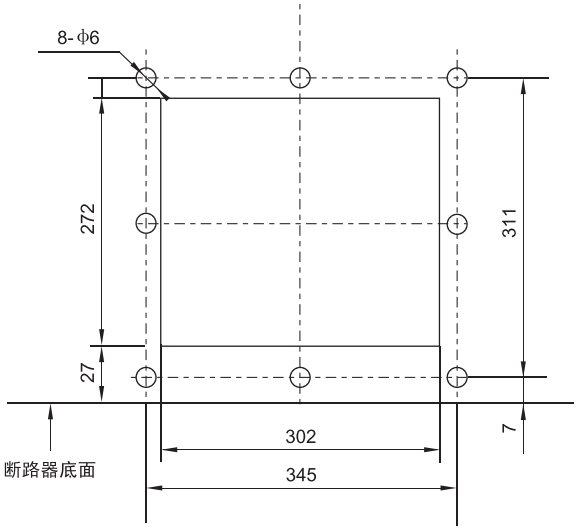

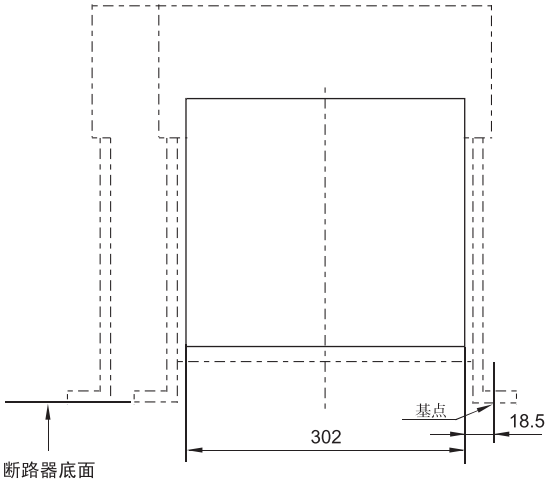

TBW1-3200 、4000、6300抽屉式3极或4极安装柜门开孔图

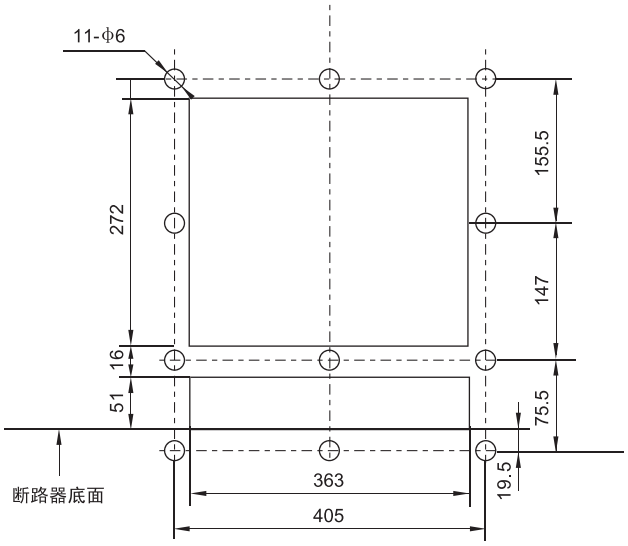

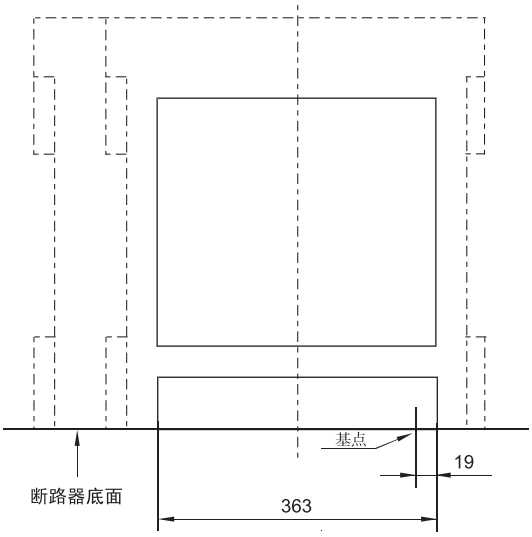

TBW1-3200 固定式3极或4极安装柜门开孔图

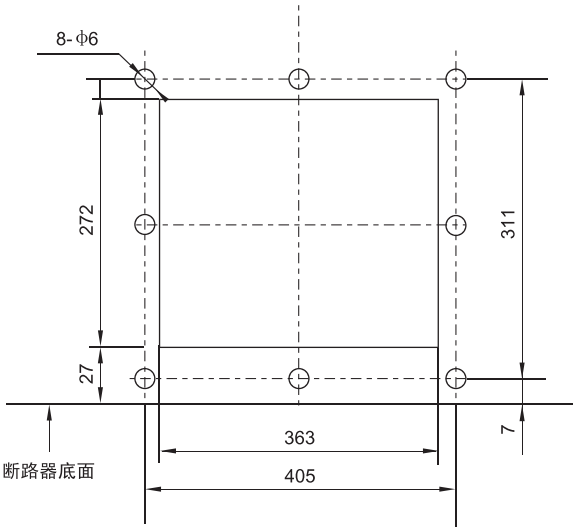

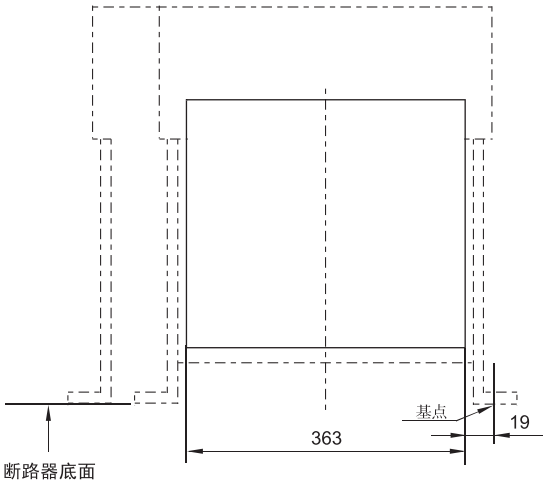

抽屉式断路器 Draw-out Breaker

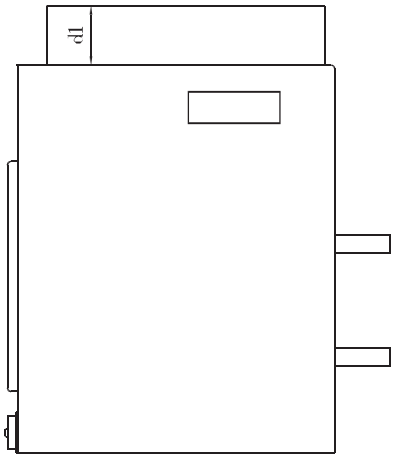

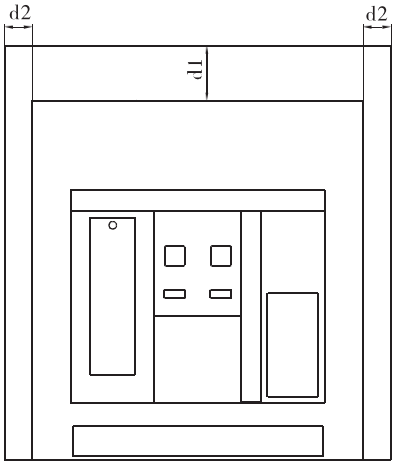

断路器与柜壁或带电部件最小距离
Minimn distance between breaker with switchboard wall or live part.

	柜壁 Switchboard wall	带电部分 Live part
d1(注note)(mm)	0	60
d2(mm)	0	60

固定式断路器 Fixed Breaker

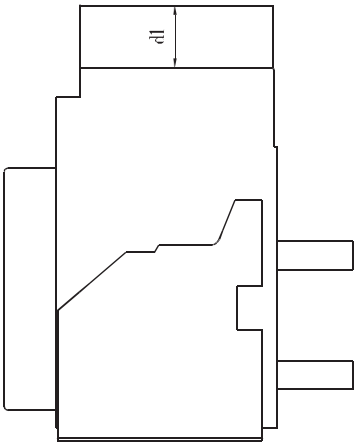

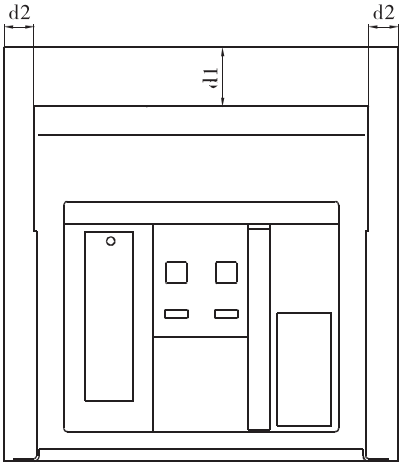

断路器与柜壁或带电部件最小距离
Minimn distance between breaker with switchboard wall or live part.

	柜壁 Switchboard wall	带电部分 Live part
d1(注note)(mm)	0	60
d2(mm)	0	60

注：安全间隙要考虑两次回路的走线。

Note:secondary circuit wiring must be considered for safety clearance.

联杆联锁（二台或三台叠装断路器）

Stick interlock (two sets or three stacked circuit breaker)

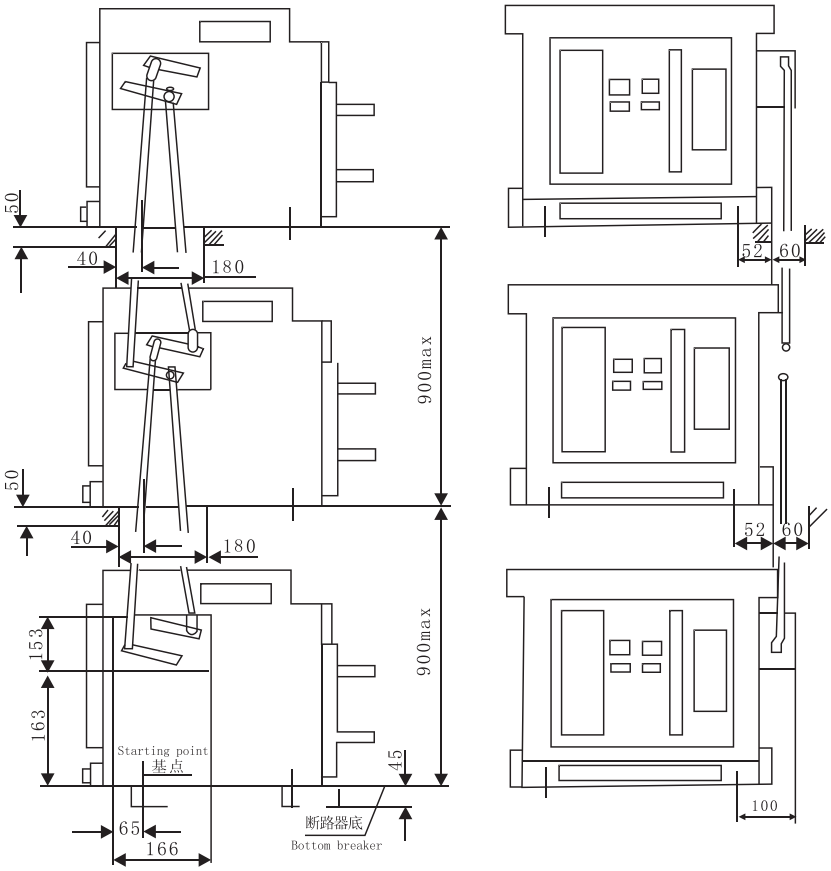

电路图 wiring diagram　　可能的运行方式 possible operation pattern

方式一：三个电源只能合一台断路器

Pattern 1:three ways of power supply close one breaker

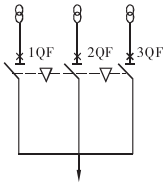

1QF	2QF	3QF
0	0	0
1	0	0
0	1	0
0	0	1

方式二：二个常用电源+一个备用电源

Pattern 2:two ways of power supply +one way of standby power supply

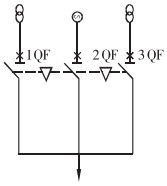

1QF	2QF	3QF
0	0	0
1	0	0
0	1	0
1	0	1
0	0	1

方式三：二个电源一个分段

Pattern 3:two ways of power supply+one way of coupling busbar

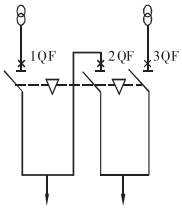

1QF	2QF	3QF
0	0	0
1	0	0
0	1	0
0	0	1
1	1	0
0	1	1
1	0	1

钢缆联锁（二台平放断路器）

Wire interlock (two sets flat circuit breaker)

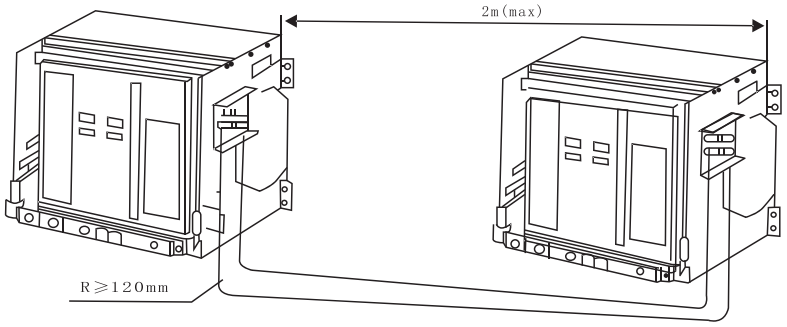

电路图 wiring diagram　　可能的运行方式 possible operation pattern

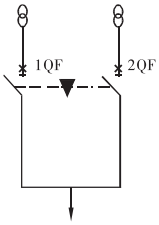

1QF	2QF
0	0
0	1
1	0

三锁二钥匙　3-Locks 2-Keys

专为不相邻的三台断路器而设计。当某两台断路器需合闸时，首先将钥匙插入该两台断路器锁孔中，并将分闸按钮按住，顺时针转动钥匙，此时断路器可进行合闸操作，但钥匙不能取出。若取出钥匙，需将断路器分闸，并将分闸按钮按住，逆时针转动钥匙并取出，此时断路器不能合闸。

Designed for non-adjacent three circuit breakers and design. When a two circuit breakers to be closing, first insert the key into the keyhole of two circuit breakers and hold the trip button, turn the key clockwise, then the circuit breaker closing operation can be carried out, but the key can not be remove. If you remove the key, the need to circuit breaker, and the sub-gate hold down the button and remove the key counter-clockwise, then the circuit breaker can not be closed.

外接式电流互感器（用户根据需要请在订货时特别注明）

External current transformer (users need please when ordering)

中性极互感器

Neutral pole transformer

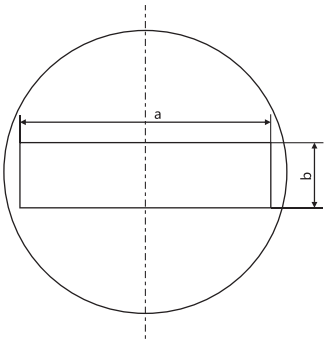

Inm(A)	a	b
2000	60	20
3200	86	30
4000	86	30
6300	86	30

安装使用 Installation and application

断路器安装使用

安装前先检查断路器的规格是否符合订货要求。并以1000V兆欧表检查断路器绝缘电阻，在周围介质温度20℃±5℃和相对湿度50%~70%应不小于20MΩ。

安装完毕，并按有关接线图接妥二次线后，抽屉式断路器应抽出两侧导轨，将断路器本体可靠放入导轨中，推动断路器本体至分离位置，将摇手柄插入进出装置孔内，顺时针摇动手柄至试验位置，应进行下列操作试验。

a)检查欠电压脱扣器，分励脱扣器，合闸电磁铁，电动贮能机构及智能控制器，外接辅助电源的额定电压与所接电源电压是否相符，然后接通二次回路（此时欠电压脱扣器应吸合）；

b)断路器贮能分手动及电动两种：手动贮能需上下扳动面板上手柄直至听到“咔”声，面板上显示“贮能”，即贮能结束。对电动贮能机构操作亦听到“咔”声面板上显示“贮能”即贮能结束。

此时按动“I”按钮或用合闸电磁铁通电，均可使断路器可靠闭合，电动贮能操作机构自动再贮能。

c)断路器闭合后，无论用欠电压脱扣器、分励脱扣器、面板上的“O”按钮或智能控制器的脱扣试验，均应使断路器断开。

⚠ 强干扰源远离断路器1000mm以上。

How to install and use the breaker

Check the specifications of breaker IN or OUT accordance with the requirements of order before installation.Check the insulati–ng resistance with a 500V megameter,the resistance should not be less than 20MΩ when ambient temperature is 20℃±5℃ and relative humidity is 50~70%.

After finished installation,and wiring the secondary circuit according with the wiring diagram,for drawout breaker,pull out the rails in two sides,push the breaker body to separated position,insert the handle into the hole of device,shake it clockwise, make it to the test position and do following operation test.

a) Check the rated voltage of undervoltage release,shunt release closing,electromagnet, motor–driven energy–storage system and intelligent controller,auxiliary supply (external) is IN or OUT accordance with the voltage of supply power,then energize the secondary circuit (at the time,the undervoltagerelease should be ON).

b) There are two ways for breaker energy– storage:manual and motordriven.

For manual energy–storage,turn the handle on face until a click comes and indicator shows "energy–storage" that it tells the energy–storage process finished.

At the time,press the button "I" or energize the closing electomagnet,the breaker could be closed reliably.For motor–driven system,it would be recharged automatically.

c) As the breaker closed,you could make the breaker released,whatever using the under– voltage release,shunt release,"o" button or tripping test of the intelligent controller.

⚠ Strong interruptive device should be kept 1000mm far from the breaker at least.

典型二次回路接线图 Typical Wiring Diagram of Auxiliary Circuit

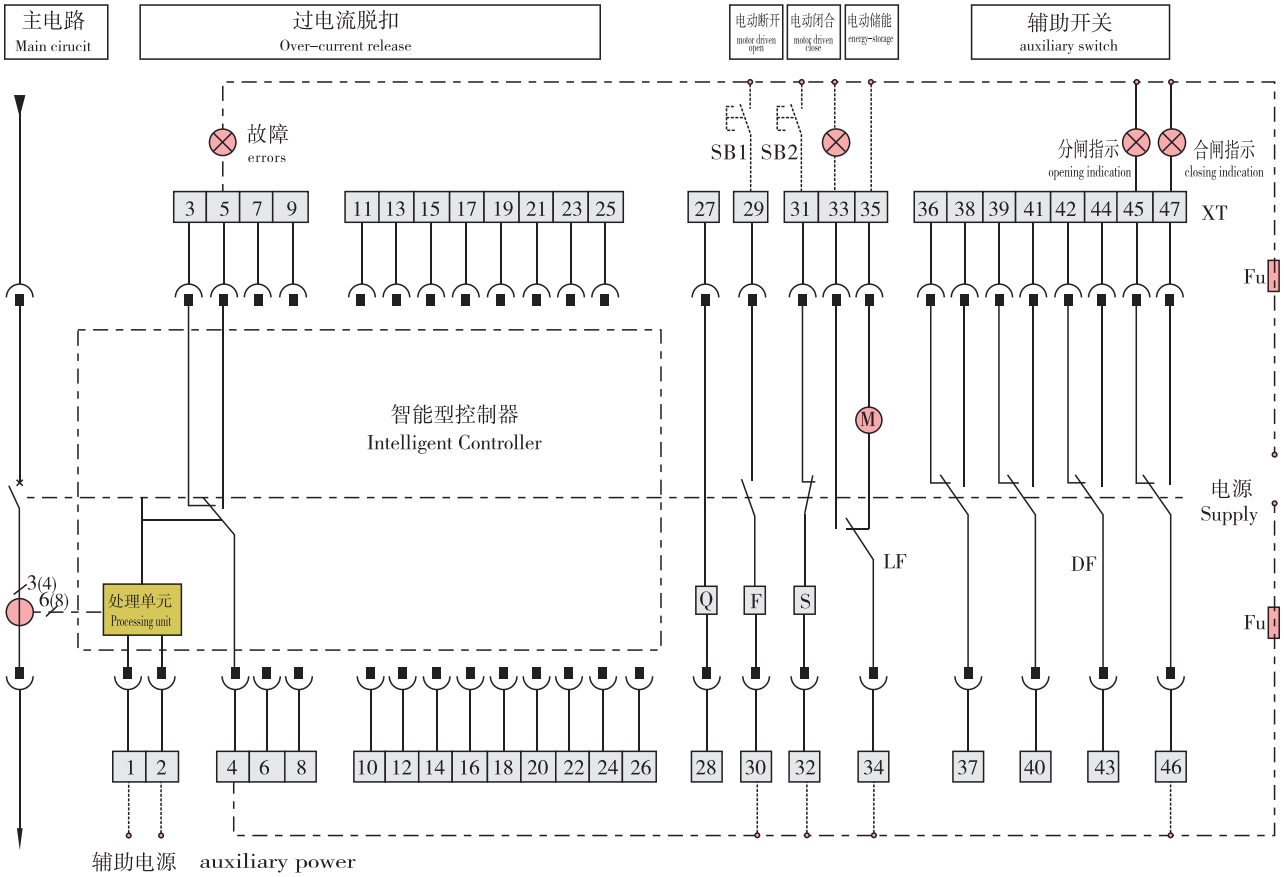

SBl-分励按钮 SB1-shunt button
SB2-合闸按钮 SB2-closing button
Q-欠压脱扣器，端子27、28应接在主电路中
Q-Undervoltane release,terminals of No. 27and 28 should be wired in the main circuit
F-分励脱扣器 F-shunt release
S-释能电磁铁 energy release electronagnet
M-储能电机 M-charging motor
XT-断路器二次回路接线端子 XT- terminals of secondary circuit of the circuit breaker
DF-辅助触头 auxilliary contacts
LF-储能电机限位触头 spacing contacts of charging motor (装入整机后，储能电机为得电状态 after erected the complete switch, the charging motor is energized state)
Fu-熔断器(6A)Fu-fuse (6A)

辅助开关特殊型式 Special type of auxiliary switch

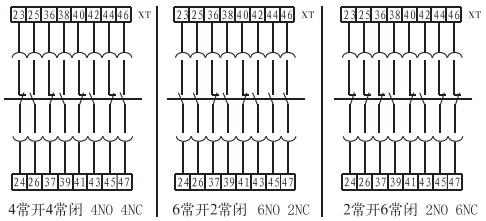

注：辅助开关选用特殊型式时，#23-#26不能另作它用。
Note: The auxiliary switch is made of special type, the # 23-# 26 can not be repurposed.

#1 ~ # 2：控制器辅助电源输入端子 auxilliary power input terminal of controller 当控制器电源为直流时，#1、#2已接入直流模块，外接直流电源应接至直流模块，端子号为U(+)、U(-)。
when the power source of controller is DC type, #1, #2 have been connected into DC module, outsicle DC power shall connect to DC module, relative terminals are U(+),U(-).
#10 ~ # 11：RS485通信口端子(适用于H型)RS485 communication interface terminal
#12 ~ # 19：控制器信号输出端子(输出信号可调) signal output of controller (signal isadjustable)
#20：PE端子(保护接地) PE terminal (protective earthing)
#21：电压信号U_N输入端子(选择电压表功能时)input terminal of voltage signal U_N (when select the voltage meter function)
#22：电压信号U_1输入端子(选择电压表功能时)input terminal of voltage signal U_1 (when select the voltage meter function)
#23：电压信号U_2输入端子(选择电压表功能时)input terminal of voltage signal U_2 (when select the voltage meter function)
#24：电压信号U_3输入端子(选择电压表功能时)input terminal of voltage signal U_3 (when select the voltage meter function)
#25 ~ # 26：外接互感器端子(增选漏电功能时)tranformer terminal for outside connection (when select additionally the function of leakage of dectricity)

通讯型应用接线范例 Conmenication Type Wiring Example

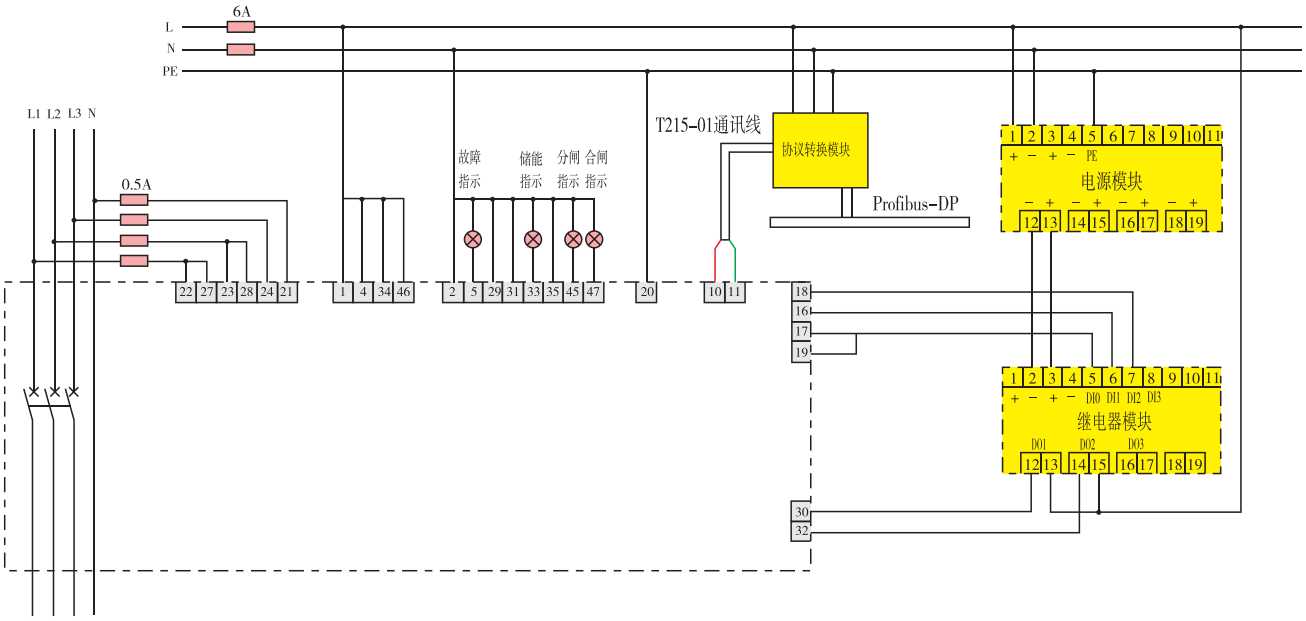

注：1. 本接线图适用的TBW1万能式断路器规格为：H型智能控制器，欠电压脱扣器电压AC400V,控制电路电压AC230V。
2. 当数据选用MODBUS协议时，图中协议转换模块不再需要，T215—01通讯线改为A类屏蔽线。
3. 通过与远程电脑本连接，可实现断路器与电脑通讯(遥讯)，在电脑上实现遥控分、合闸(遥控)，断路器状态显示(遥测)，断路器参数调整(遥调)等功能。
4. 远程电脑需安装通讯软件。

note: 1. The applicable TBW1 universal breaker as for upper wiring example is: type H intelligent controller, the voltage of under voltage release is 400V AC, of control circuit is 230V AC.
2. When use MODBUS regulation to communicate, the DP changeover module is not needed,T215-01 communicate line shall be instead of by type A shield line.
3. By conneeting to remote computer, can communicate between, breaker and computer (remote communication), can trip and close on computer (remote control), can display status of breaker(remote measuring), can adjust parametors of breaker(remote adjustment), ete.
4. The remote computers nee to install communication software.

抽屉式断路器主回路接线铜排规格参考表 ROFERENCE TABLE OF MAIN CIRCUIT WIRING COOPER BAR FOR DRAW-OUT CIRCUIT BREAKERS

壳架等级额定电流Inm（A）	额定电流In（A）	铜排规格	
		根数	尺寸（mm×mm）
2000	630	2	50×5
	800	2	60×5
	1000	2	60×5
	1250	3	60×5
	1600	2	60×10
	2000	3	60×10
3200	2000	3	100×5
	2500	4	100×5
	3200	4	100×10
	4000	5	100×10
6300	4000	5	100×10
	5000	6	100×10
	6300	8	100×10

表中规格为断路器牌周围环境温度最高40℃，敞开安装且满足GB14048.2中约定发热条件。
The spsecification of cooper bars in the above table are introduced under the conditions that the circuit breakers open installed are at the maximum ambient environment temperature of 40℃ and satisfy conventional haeating in GB 14048.2.

选型表 Type Selection Form

（请在□内打√或填上数字 Sign √or fill figures in□ ）

型号 TBW1 —□ Type		□ — 固定式 Fixed Version	□ — 抽屉式 Draw-out Version	
极数 Pole Quantity		□ — 三极 Three-poles	□ — 四极 Four-poles	
额定电压 RatedVoltage	□ AC 400V □ AC 690V	额定电流 In= □ A Rated current	N 极额定电流 IN Rated current of N Pole (IN)	□ 50% In □ 100% In
智能型控制器 Interlligent Controllet	型号选择 Type choosing	□ L型(电子型) L Type (Electroic Type)	□ M型(标准型) M Type (Typical Type)	□ 2H型(通讯型) 2H Type (Communication Type)
	基本功能 BasicFunction	过载长延时保护 Overload Long-time Delay Ir1 □ t1 □ 试验功能 Test	短路短延时保护 Short Circuit Shirt-time Delay Ir2 □ t2 □ 报警及故障区段指示 Alarm and District Indication	短路瞬时保护 Short Circuit Instantaneous Ir3 □ 整定功能 Setting
		电流柱状显示 Corrent Indication in Columnar Type 故障记忆功能 Fault Memory	接地故障保护 Earthed Errors Ir4 □ t4 □ 故障记忆功能 Fault Memory 自诊断功能 Auto-diagnosis	电流显示功能 Current Indication 热记忆功能 Thermo-analogue 通讯功能 Communication Function
	选择功能 Choosing Function	□ MCR功能 MCR Function	□ 漏电保护 Electricity leackage protection	□ 信号单元触点输出 Signal unit contact output
		接地故障保护 Earthed Errors Ir4 □ t4 □	□ 负载监控功能 Load Monitoring — □ 方式一 Pattern One / □ 方式二 Pattern Two □ 电压显示功能 Voltage Indication	
	电源 Power	□ AC 230V	□ AC 400V	□ DC 220V □ DC 110V
附件 Attachments	□ 欠电压脱扣器 Under Voltage Release	□ AC 230V	□ AC 400V	
		□ 欠电压瞬时脱扣器 Under Voltage Instantaneous Release □ 欠电压延时脱扣器 Under Voltage Time Delay release	□ 1s □ 2s □ 3s □ 5s	
	□ 分励脱扣器 Shunt Release	□ AC 230V	□ AC 400V	□ DC 220V □ DC 110V
	□ 释能电磁铁 Energy release electronagnet	□ AC 230V	□ AC 400V	□ DC 220V □ DC 110V
	□ 电动操作机构 Motor-driven	□ AC 230V	□ AC 400V	□ DC 220V □ DC 110V
	□ 机械联锁 Interlock	□ 钢缆联锁 Wire Interlock	□ 联杆联锁 Stick Interlock	□ 三锁二钥匙 3-locks 2-keys
	□ 辅助触头 Auxiliary Contacts	□ 标准型式 Standard Pattern	□ 4组转换触头 Four Groups Of Changeover Contacts	
		□ 特殊型式 Exceptional Pattern	□ 4常开4常闭 4 No 4 NC	□ 6常开2常闭 6 NO 2 NC □ 2常开6常闭 2 NO 6 NC
备注 Note	如产品的技术要求超出本规范表，请与本厂协商解决。 If the breaker with technical demands deyond range of this order form, please contact with us.			

云南通变电器有限公司

YUNNAN TONGBIAN ELECTRIC APPARATUS CO.LTD

科学创新造精品

诚实守信服务优

持续发展重环境

安全健康人为本

TONGBIAN

云南通变电器有限公司

地址：云南省通海县礼乐西路117号
电话：0877-3055899
传真：0877-3055899
邮编：652700
E-mail:yntbctc@126.com
网址：http://www.yntb.com.cn

2015年印制