TC2

VIB

C 2007

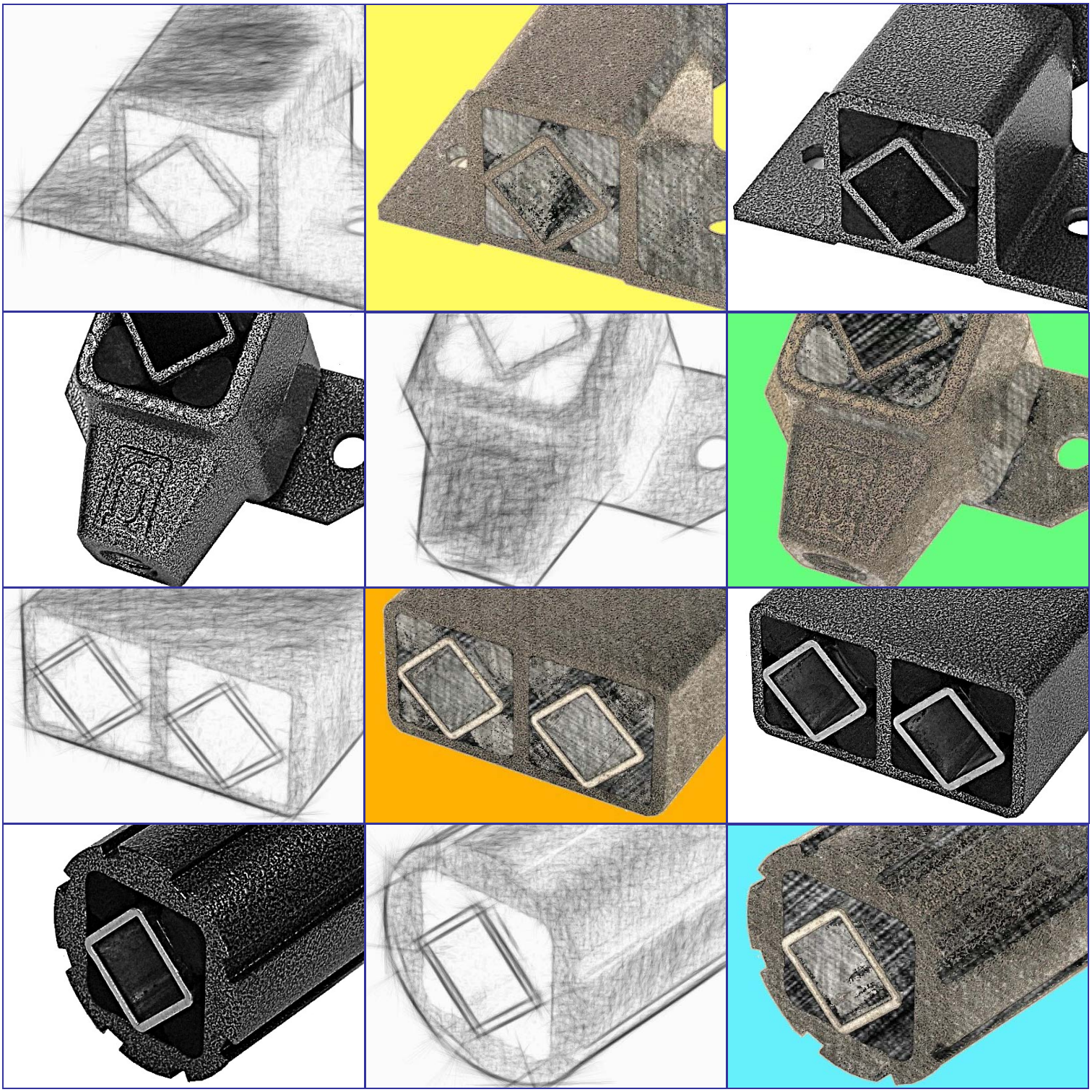

TECNIDEA CIDUE 泰尼达 S.r.l.

CERTIFIED QUALITY MANAGEMENT SYSTEM ISO 9001:2008 SINCERT DNV

VIB 弹性组件应用图片
APPLICATION PHOTOS OF VIB ELASTIC COMPONENTS

1

2

3

4

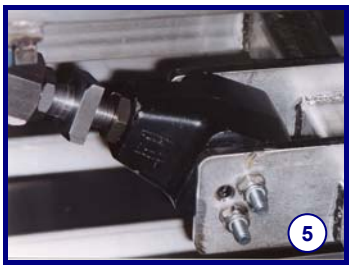
5

6

7

8

9

10

11

12

13

14

15

16

17

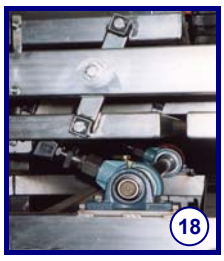
18

表面处理：涂漆 / SUPERFICIAL PAINTING TREATMENT:

VIB 产品标准颜色是在图位①显示的“阿拉伯式”。若有需要，我们可提供 RAL 系列的所有颜色 /

The standard colour of the VIB products is that one at the position ① "Arabesqued". Upon request we can supply all the colours of the RAL range

© Copyright Tecnidea Cidue S.r.l. Italy 2007

未经 Tecnidea Cidue 预先书面许可，不可复制这份刊物的任何内容。
No part of this publication may be reproduced by any means without the written permission of Tecnidea Cidue.

目录 / *INDEX*

简介: 技术 *INTRODUCTION: TECHNOLOGY*	第 5 – 11 页
弹性组件 *ELASTIC COMPONENTS*	第 12 – 21 页
振动组件 *OSCILLATING COMPONENTS*	第 22 – 64 页
附件 *ACCESSORIES*	第 65 – 67 页
抗振组件 *ANTI-DUMPING COMPONENTS*	第 68 – 74 页
应用领域 – 应用范例 *APPLICATION SECTORS - APPLICATION EXAMPLES*	第 75 页

COMPANY WITH QUALITY MANAGEMENT SYSTEM CERTIFIED BY DNV
= ISO 9001:2008 =

Via Apollo XI, 12 – 37057 San Giovanni Lupatoto – Verona – Italy – Tel 0039 (0)45 8750250 – Fax 0039 (0)45 8750288
www.tencideacidue.com - e-mail: sales@tecnideacidue.com

产品展示 / *PRODUCT RANGE*

1 AR-T 第 12 页	2 AR-P 第 13 页	3 AR-F 第 14 页	4 AC-T 第 15 页	5 AC-P 第 16 页
6 AD-T 第 17 页	7 AD-P 第 18/38/40 页	8 AS-P 第 19 页	9 BT-F 第 28 页	10 TB 第 30 页
11 TP-S 第 32 页	12 TP-F 第 33 页	13 TD-S 第 35 页	14 TD-F 第 36 页	15 GF 第 42 页
16 DE , DE R 第 49-50 页	17 DE-2L 第 52-53 页	18 DE SYM 第 54 页	19 AN-D 第 57 页	20 AD-L 第 59 页
21 BF 第 61 页	22 CR-P 第 63 页	23 SR 第 65 页	24 SC 第 65 页	25 SY 第 65 页
26 SB 第 66 页	27 PAR-T 第 66 页	28 Y 第 71 页	29 AN 第 73 页	30 不锈钢 / *STAINLESS STEEL* 第 7 页

简介: 技术 / *INTRODUCTION: TECHNOLOGY*

VIB 扭转式弹性组件

Tecnidea Cidue 的弹性组件是使用橡胶弹性的机械组件，在不同应用范围内使用，具有“弹簧”、“减震器”、“减速器”和“振动支撑”的功能。

VIB 组件结构简单，使用方便，具极高的弹性和对碰撞、敲击、振动和摆动的优良吸收功能。

设计者可以这些产品取代陈旧的抗震、振动、减震和悬挂装置，避免昂贵的耽误时间，另外减低维修费用。不同的应用方式均使用同样的功能原理：位于由两个扭转角度为 45°的方形部件（2 和 3）的联接所构成的空间中的四个天然橡胶制圆柱（1）的弹性变形性。橡胶圆柱使用天然橡胶，在其中加入专用添加剂并经过特殊的化学处理和热处理使其适合这些应用。

两个方形部件的可允许的最大扭转角度为±30°，此角度与振动频率成反比。由于预应力橡胶的摩擦防止向两个方向中其中一个方向移出，两个方形部件无需使用轴向约束系统。为此，其特殊的构造方式组成一项完整的弹性系统，以最小的占地提供极大的可信度，永远消除噪音（由于在它们之间没有金属部分的接触）和污染（由于不使用润滑剂并且磨损极低）的问题，同时在运转过程中显著减低费用。

VIB 产品的主要为铝制或钢制的内部和外部组件，与天然橡胶内置物组装。外部镀有极为耐久的油漆，为在大约 200°C 的烤炉内处理；另一方面，为了不影响尺寸限度，内部使用喷漆薄膜保护。在本产品目录中所展示的所有产品均可在–40°C 至+80°C 的环境温度使用。由于所使用的材料本性和处理方式，以及其抗污垢性、抗水性和抗日光性，这些产品组件均可在极端的外界环境中使用。

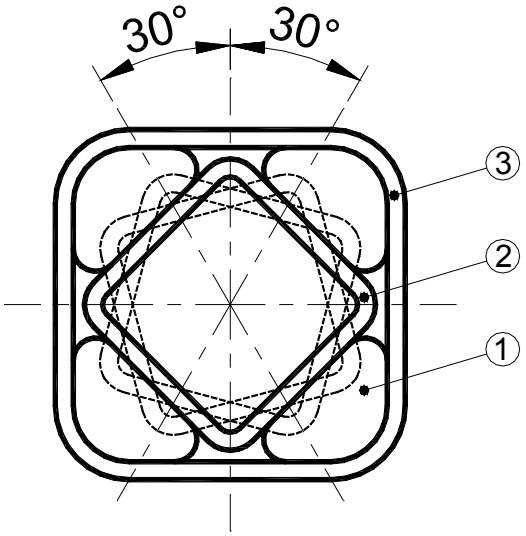

说明 / *Key*:

1: 天然橡胶圆柱 / *Natural rubber cylinders*

2: 内部方形部件 / *Inner square section*

3: 外部方形部件 / *External square section*

VIB ELASTIC ROTATING COMPONENTS

The elastic components produced by TECNIDEA CIDUE are mechanical items which exploit the elastic characteristics of rubber for use in various applications such as: springs, shock absorbers, decelerators and oscillating supports.

VIB components, with their simple structure and use, are distinguished for their high elasticity and ability to absorb impacts, blows, vibrations and oscillations.

With these products, the designers can replace obsolete vibration-damping, oscillating, shock absorbing and suspension systems, avoiding expensive wastes of time and also reducing maintenance costs. The various applications all exploit the same operating principle: the elastic deformation of four natural rubber cylinders (1), lodged inside the hollows resulting from the coupling of two square-section elements (2 and 3) rotated 45° with respect to each other. The rubber cylinders have a base of natural rubber, suited for use in these applications by inserting particular additives and carrying out special chemical and heat treatments.

The maximum admissible angle of torsion between the two square sections is ±30° and is inversely proportional to the oscillation frequency. It is not necessary to use axial containment systems for the two square-section elements, since the friction of the prestressed rubber prevents them coming out in either of the two directions. The particular constructive system therefore forms a highly reliable, integral elastic system with minimum bulk, which permanently eliminates problems such as noise (there are no metal parts in contact with one another) and pollution (there are no lubricants and wear is insignificant), with a notable reduction in running costs.

VIB internal and external components, mainly of aluminium or steel, are assembled with natural rubber inserts. External details are coated with a highly resistant paint which is the result of a heat treatment (oven) at 200°C. All parts inside are protected by a thin layer of sprayed paint in order to maintain dimensional tolerances. All the products described in this catalogue can be used with temperature ranging from –40°C to +80°C. The products in this catalogue can work even under extreme environmental conditions since, thanks to the nature of the materials used and the treatments to which they are subjected, they are insensitive to dirt and are very resistant to water and to the rays of the sun.

技术

VIB 产品使用模块性组件制造，为此可在机械不同领域得到应用。所有的组件均在±30°的扭转角度使用，排除一些特别的例外，在这些例外情况下，使用预加负荷系统，比如可在+7°至+30°的扭转角度范围使用。由于所使用材料的不同种类（钢材、铝材、不锈钢、铸铁和铝材融合），具大范围适用性的产品系列可在众多的工业领域得到应用，使得先进技术设备制造成为可能。特殊的金属材料均得到不同的表面处理，使得所有产品适合我们用户的不同需求。我们所使用的天然橡胶具有对碰撞和振动极高的吸收能力，这是由于在收到外界刺激时，比如说振荡，可通过在橡胶分子在移动中产生的摩擦而吸收动能，将其转变成热量而排放到外界。VIB 弹性组件借着其多功能性，成为代替如下传统应用系统的理想产品：张紧和挤压、缓冲和减弱、振荡、悬挂和支撑。

张紧和挤压系统

这项应用有效地代替用于使用弹簧和平衡重块制造自动链条张紧器和皮带张紧器、压紧辊、输送机导向推动机、电子线路绝缘等的传统应用系统。

缓冲和减弱系统

在这种情况下，VIB 产品用于制造：限位开关隔板、电动机振动底座支撑、抗震动支撑、输送机和振动筛悬挂。其主要功能为吸收敲击、碰撞、振荡并减弱在机器结构中所传播的振动。所有这些功能均以可靠和坚实的无噪音方式进行。

振荡系统

使用这项技术不须通过特殊移动机械装置，但是仅使用所运输物料的重量而进行产品运输。这项系统制造尤其简单，由于不产生在运转损耗中的生垢，遵守严格的卫生准则。自然而言，除了输送，其所应用的方面众多，所有用于添加或移除物料、覆盖、分配、计量、筛选、选择及统一化制成产品的系统。

悬挂和支撑系统

使用免除维修和简化结构的更新技术，这些特殊的抗振动系统用于替代振动支撑，并成功地替换传统的机械系统，比如支撑、轴承、轴套和减震装置。

TECHNOLOGY

VIB items are obtained from modular elements and may be used for a great many mechanical applications. All elements work with a ±30° rotation angle, except for a few special applications where a pre-loading system is adopted making the rotation range from +7° to +30°. These multi-faceted products are ideal for many industrial applications thanks to the different type of materials used (steel, stainless steel, aluminium, cast iron and aluminium castings) are appropriate for technologically advanced systems. Metal components are subject to various finishing treatments in order to meet the different needs of our customers. The natural rubber we use has a high capacity of absorbing shocks and oscillations. Anytime it is stressed by external sources, such as vibrations, it absorbs the kinetic energy by means of the friction which is formed between the moving rubber molecules and transforms it into heat which is dispersed in the environment.

VIB elastic elements are so versatile and are ideal to replace traditional applications with systems to Tighten and Press, Cushion and Damp, Suspend and Support

TIGHTEN and PRESS

This application efficiently replaces traditional systems where springs and counterweights are applied to chain and belt tighteners and automatic belt tighteners, pressure rollers, pushers for conveyor guides, electrical panel insulation, etc.

CUSHION and DAMP

VIB are used for the production of end of stroke walls, support for oscillating basement of motors, vibration-damping supports, suspensions for conveyors and vibrating screens. These elements are designed to absorb shocks, crashes, vibrations and to damp oscillations that propagate in all machinery structures, providing a noiseless, reliable and compact system.

VIBRATE

There is no need to use special mechanical shifting parts to move products with this technology but the weight itself of the conveyed material. This system, very easy to apply, complies with the strictest sanitary regulations as there is no formation of dirt from wear. It may be applied to many sectors: transportation as well as all systems that need to add or remove materials, cover, distribute, dose, screen, select and size all the products processed.

SUSPEND and SUPPORT

As an alternative to oscillating supports, these vibration-damping systems successfully replace traditional mechanical systems – supports, bearings, bushings and suspensions – with innovative technology that eliminates maintenance and simplifies structures.

橡胶

我们公司不断地研发新产品，尤其是致力于在本目录中产品所应用的橡胶品种的学习、实验和开发。Tecnidea Cidue, 与其公司的设计师合作，成功地开发了使用天然橡胶的橡胶，以便以更好的方式满足每项设计需要，其中综合了弹性和硬度，具有极高的机械效能和最佳的回弹性，即恢复最初形状的能力。不断的研究确定了可影响 VIB 弹性组件效能的不同因素: 拉丝、硫化和橡胶热处理、插入方式、在弹性组件中内置物的稳定性和工作环境（湿度、温度等）。所有这些因素均得到不断的分析并且不断提供提高 VIB 产品质量所必需的条件。

RUBBER

Our company is constantly investing in research of innovative products with a strong focus on studying, testing and developing the types of rubber used in the items illustrated in this catalogue. Tecnidea Cidue, backed by its designers, has obtained a natural rubber range which encompasses both elasticity and hardness to meet the most demanding engineering requirements with top mechanical performance and resilience, i.e. the property of a material that enables it to resume its original shape. Ongoing research has identified several factors that may have an impact on the performance of the VIB elastic elements: drawing, vulcanization and heat treatments of rubber, insertion procedures, fixation of inserts inside the elastic elements and work environment (humidity, temperature, etc.). All these factors are being continuously monitored and analysed, and are essential to increasingly improve the quality of VIB products.

耐化学品性列表 / *CHEMICAL RESISTANCE TABLE*

	不良 *Poor*	足够 *Suff.*	良好 *Good*	优秀 Very good		不良 *Poor*	足够 *Suff.*	良好 *Good*	优秀 Very good
丙酮 / *Acetone*			■		苯 / *Benzene*	■			
醋酸 <25% *Acetic acid <25%*		■			汽油 / *Fuel oil*	■			
柠檬酸 / *Citric acid*				■	柴油 / *Gasoleum*	■			
盐酸 <15% / *Hydrochloric acid <15%*		■			甘油 / *Glycerine*				■
甲酸 / *Formic acid*	■				次氯酸钠/ *Salt*		■		
磷酸 <85% / *Phosphoric acid*	■				牛奶 / *Milk*				■
乳酸 / *Lactic Acid*			■		糖浆 / *Sugar*				■
硝酸 <10% / *Nitric acid*	■				液压油 / *Hydraulic oil*	■			
氢硫酸 / *Sulphudric acid*	■				润滑油 (永久浸泡) / *Lubricating oil (permanent immersion)*	■			
硫酸 <10% / *Sulphuric acid*			■		石油 / *Petroleum*	■			
单宁酸 / *Tannic acid*			■		苛性苏打 <25% (20°C) / *Caustic soda up to 25 % (20°)*			■	
酒石酸 / *Tartaric acid*		■			苛性苏打 <85% / *Caustic soda <85%*			■	
水 / *Water*				■	油漆溶剂 / *Varnish solvent*	■			
海水 / *Seawater*				■	果汁 / *Fruit juice*				■
酒精 / *Alcohol*				■	甲苯 / *Toluene*	■			
氨 / *Ammonia*			■		葡萄酒 / *Wine*				■

VIB 不锈钢

不锈钢组件仅在客户需求时根据 DIN 1.4301 / AISI 304 标准制造。此类产品为解决腐蚀（生锈）问题的理想办法，并且满足以下重要工业领域的严格卫生要求：食品、捕鱼、航海、医药、化工、瓶装、计量、大理石和陶瓷等。VIB INOX 的尺寸与其他 VIB 产品不总是一致，但是非常相似，而且为保证同样的效能，始终遵循橡胶的压缩比，这一点可参见根据您要求而提供的特定技术数据。与 VIB INOX 产品一起我们还向您提供我们的 CRESA CIAO 产品（参见专门产品目录），由于后者使用弹性材料和不锈钢螺钉制造，可有效解决腐蚀问题。

STAINLESS STEEL VIB

Stainless steel elements are produced only upon request and comply with the DIN 1.4301 / AISI 304 norms. They are the ideal answer to corrosion (rust) and meet strict hygiene standards to which important industrial sectors are subjected to: FOOD, FISHING, SHIPPING, PHARMACEUTICAL, CHEMICAL, BOTTLING, DOSING, MARBLES and CERAMIC etc. Although VIB INOX sizes differ from the rest of the VIB range, they always respect the rubber compression ratio and guarantee same performance (see technical specifications available upon request). We also propose our CRESA CIAO products (see special catalogue) that solve efficiently corrosion problems given the fact that they are in plastic and screws are in stainless steel.

应力列表 / *TABLE OF STRESS*

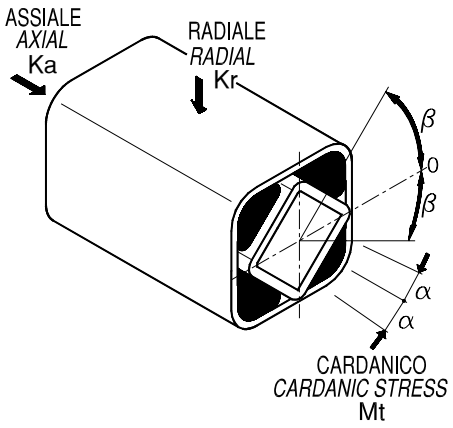

操作

VIB 弹性组件主要作为扭转弹簧使用，具最大扭转角度 ±30°。左图中显示 VIB 产品所能承受的应力，在表格中陈述在静止条件下所能承受的径向、轴向和扭转负荷的最大值。为了保证产品的正确使用，应遵守径向负荷 K_r、轴向负荷 K_a 和扭矩 M_t。C: 变形量 以 mm 表示。

OPERATION

The VIB elastic elements are used mainly as torsion springs with a maximum rotational angle of ±30°. The drawing at the side shows the stress that the VIB elements can withstand and the table gives the values that can be obtained in static conditions. For correct use of the elements, the radial loads K_r, the axial loads K_a and the torque M_t must be observed. C: set in mm.

弹性组件 – 型号: *Elastic Elements – Type:* AR – AC – AD – AS	径向应力 K_r *Radial Stress K_r*		轴向应力 K_a *Axial Stress K_a*		扭转应力 M_t *Cardanic Stress M_t*
	C max [mm]	K_r [N]	C max [mm]	K_a [N]	M_t 以 Nm 表示 per □ α = 1°
10 x 20	0.25	190	0.25	58	0.37
10 x 30	0.25	320	0.25	76	1.00
10 x 50	0.25	570	0.25	144	5.36
20 x 25	0.25	192	0.25	68	0.57
20 x 40	0.25	285	0.25	97	1.80
20 x 60	0.25	478	0.25	155	5.30
30 x 30	0.25	380	0.25	75	1.50
30 x 50	0.25	665	0.25	152	6.50
30 x 80	0.25	762	0.25	288	26.80
40 x 40	0.50	763	0.50	187	3.70
40 x 60	0.50	1230	0.50	288	10.80
40 x 100	0.50	2280	0.50	570	45.70
50 x 60	0.50	952	0.50	288	10.70
50 x 80	0.50	1910	0.50	478	23.60
50 x 120	0.50	2852	0.50	575	72.20
60 x 80	0.50	1800	0.50	534	26.80
60 x 100	0.50	2855	0.50	662	51.00
60 x 150	0.50	4565	0.50	953	135.00
70 x 120	0.50	2665	0.50	760	47.00
70 x 200	0.50	5985	0.50	1040	238.00
70 x 300	0.50	8170	0.50	2095	1160.00
80 x 150	1.00	5130	1.00	1525	85.50
80 x 200	1.00	6840	1.00	2050	210.00
80 x 300	1.00	8935	1.00	3045	850.00
90 x 200	1.00	8547	1.00	2050	270.00
90 x 300	1.00	11396	1.00	3420	1150.00
90 x 400	1.00	13305	1.00	3850	2060.00
100 x 200	1.00	9685	1.00	2380	648.00
100 x 300	1.00	14250	1.00	2650	1425.00
100 x 400	1.00	18055	1.00	4465	4380.00
110 x 250	1.00	14253	1.00	3037	1150.00
110 x 400	1.00	33255	1.00	5510	4090.00
110 x 500	1.00	36050	1.00	7130	7650.00

C max: 最大变形量[mm] / *Max set [mm]*

K_r: 径向应力 [N] / *Radial Stress [N]*

K_a: 轴向应力 [N] / *Axial Stress [N]*

M_t: 扭转应力 [Nm] / *Cardanic Stress [Nm]*

操作图 / *OPERATING GRAPHS*

1

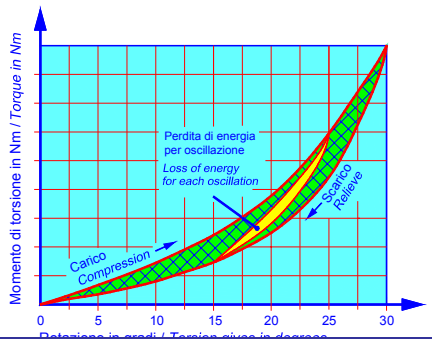

减震系数

由于取决于温度或加速等因素，减震等级不是定值。在负荷曲线和松放曲线之间的面积代表因振动而释放的能量。

SHOCK ABSORBING FACTOR

The shock absorption value is not constant as it depends on factors such as temperature and acceleration. The area between the loading curve and the release curve represents the loss of energy by oscillation.

2

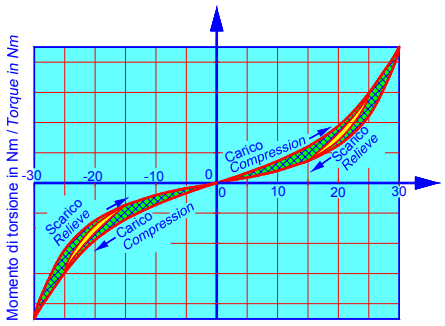

弹性特征

振动组件的特殊设计使得在负荷和松放阶段具有渐进的弹力（由左图所示）。扭矩与橡胶的长度成比例。

ELASTICITY

The special construction of the oscillating element offers progressive elasticity (as can be seen in the graph at the side) both in the loading and releasing phase. The torque is proportional to the length of the rubber.

3

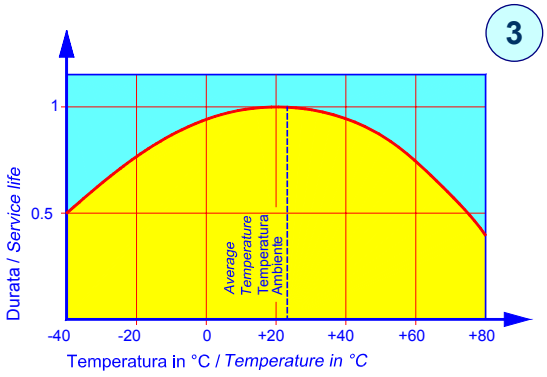

持久性

为了保证我们的弹性组件特性的长期稳定性，工作温度应为在图中因数 1 的位置所显示的。当热因数改变时，橡胶的持久性也会发生变化，产品的效力也会改变。

DURABILITY

In order to censure that the characteristics of our elastic elements remain unchanged in the long term, the operating temperature should be as specified in the graph by factor 1. Every time the thermal factor varies, also changes the durability of the rubber and therefore the efficiency of the product.

4

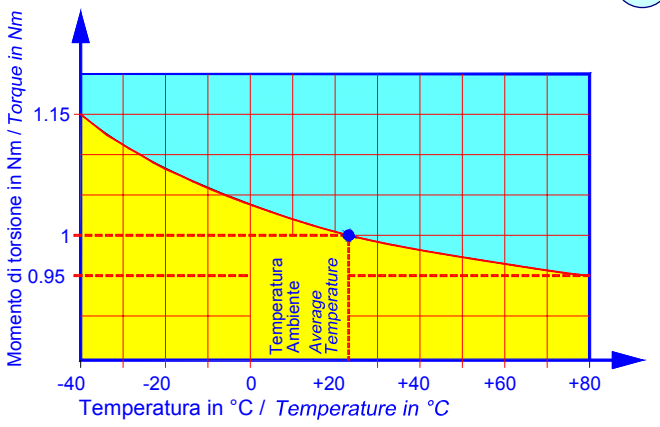

工作温度

用于我们产品的橡胶是为预定在–40°C 至+80°C 之间波动的温度范围内的应用而生产的。如果超过 80°C，丧失机械耐性，其结果是减震比例在低温条件下升高，在其他温度减低。另外，应考虑到实际工作温度不是外围环境的温度，因为橡胶和金属材料之间的摩擦可造成进一步的温度升高。

OPERATING TEMPERATURE

The rubber used in our products has been designed to operate in a –40°C +80°C temperature range if the temperature exceeds 80°C, mechanical resistance is reduced and the percentage shock absorption consequently increases at low temperatures and drops at high temperatures. It should also be remembered that the real operating temperature is not the temperature of the surrounding environment as the fiction produced between the rubber and the metal causes a further rise in temperature.

操作图 / *OPERATING GRAPHS*

5

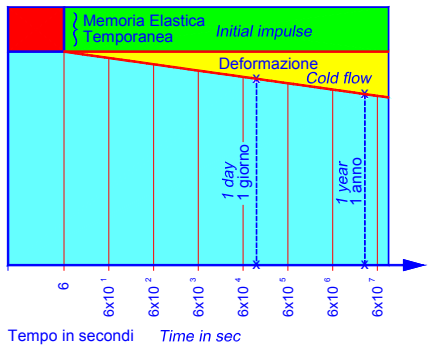

橡胶的长期变形

左图表示 VIB 产品中所使用的橡胶在长期使用过程中的变形。操作范围为±30°扭转角度，变形负荷在专门的列表中显示。由此图可见在一天中的变形比一整年工作变形的一半稍多。与静止位置相比，用于我们产品中的橡胶的不回返角度在 3°至 5°范围内。

LONG-TERM DEFORMATION OF THE RUBBER

The graph at the side shows the long-term deformation of the rubber used in the VIB elements. The operating range varies by ±30° rotation and deforming load is as shown in the specific technical tables. As can be seen one day's deformation accounts for just over half the deformation of an entire year of operation. The non-return memory of the rubber used in our products ranges 3° to 5° with respect to the rest position.

6

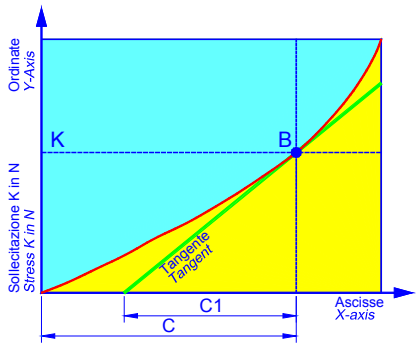

特定振动频率

通过左图和如下描述的公式，可大致取得固有频率值；若知道负荷值 K，可轻易地根据曲线在点 B 的切线计算在横坐标上的距离 C1。

$f=\frac{300}{\sqrt{C1}}$ [min^{-1}]　例如 C1=3 cm　$f=\frac{300}{\sqrt{3}}$ = 173 min^{-1}

SPECIFIC OSCILLATION FREQUENCY

The approximate specific frequency can be obtained via graph and formula described below; if we know the value of the load K, we can easily obtain the distance of the C1 axis from the tangent to the curve at point B.

$f=\frac{300}{\sqrt{C1}}$ [min^{-1}]　*Example with C1=3 cm*　$f=\frac{300}{\sqrt{3}}$ = 173 min^{-1}

7

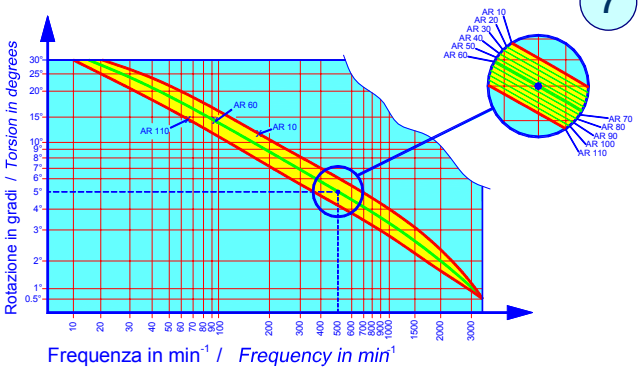

可允许频率

借由此图，可根据振动角度和预选振动组件很快地决定最高频率。频率越高，振动角度越小。

实例：　振动组件 AR 50 可由±5°的振动角度引发到最高频率 500 min^{-1} (8.3 Hz)。

PERMITTED FREQUENCY

The diagram facilitates rapid determination of maximum frequency according to the oscillation angle and the selected oscillating element. The higher is the frequency the smaller the oscillating angle.

Example: An oscillating element AR 50 can be brought to a maximum frequency of 500 min^{-1} (8,3 Hz) with an oscillating angle of ±5°.

8

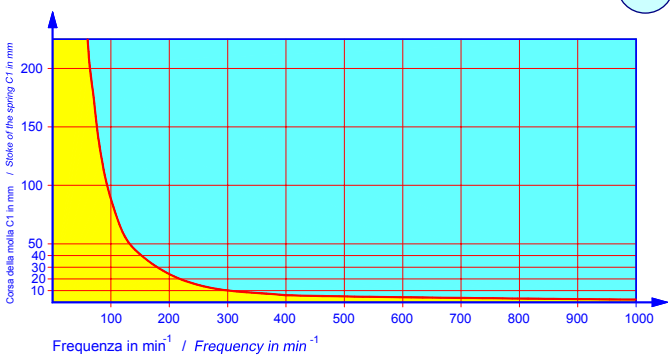

按照弹簧行程的固有频率

此图显示在弹簧行程和固有频率之间的比例关系。

FREQUENCY ACCORDING TO SPRING STROKE

This diagram shows the ratio between the spring stroke and its frequency.

实例 / *Example*:　1 mm = 960 min^{-1} / 16 Hz
10 mm = 300 min^{-1} / 5 Hz
50 mm = 134 min^{-1} / 2.23 Hz
100 mm = 96 min^{-1} / 1.60 Hz.

应用范例 - *APPLICATION EXAMPLES*

缓冲器
Bumper

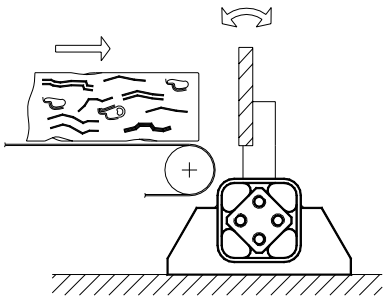

1

压力辊用悬架
Pressure roller suspensions

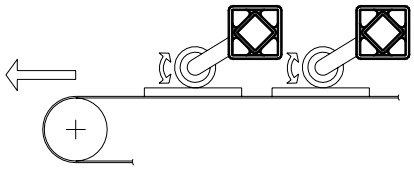

2

刮料器和带式输送机用悬架
Suspension for belt scraper and belt conveyor

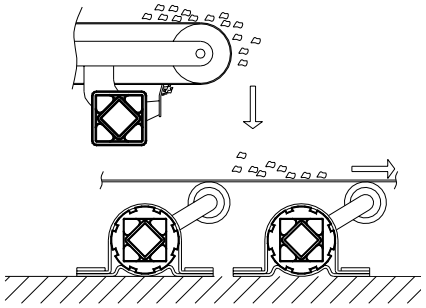

3

艺术品绝缘
Works of art insulation

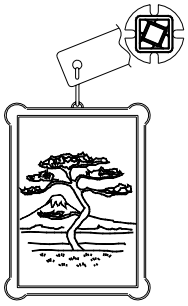

4

座椅用悬架
Chair suspension

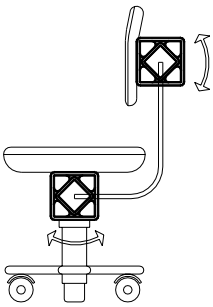

5

门挡
Door stop

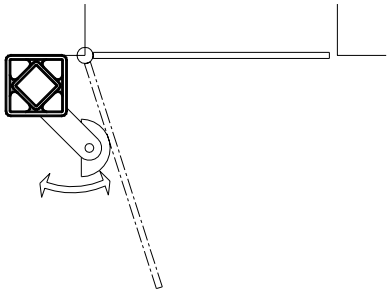

6

跳板用悬架
Suspension for springboard

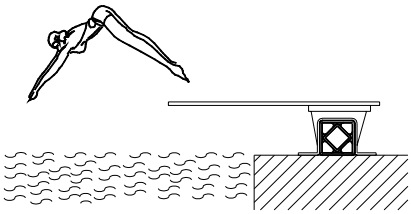

7

耙土机或播种机用悬架
Suspension for harrow or seeder

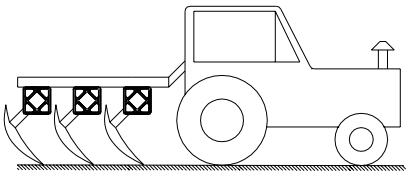

8

轮椅用悬架
Suspension for wheelchairs

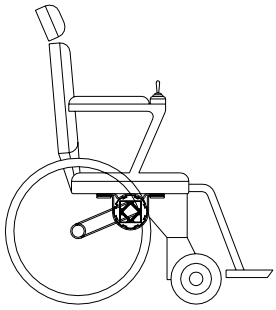

9

街道清扫刷用悬架
Brushes suspension for the cleaning of the streets

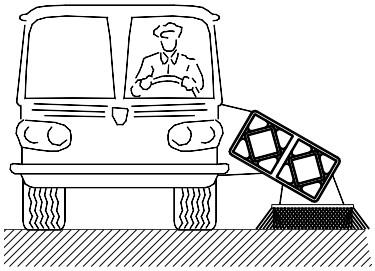

10

秋千弹性接头
Elastic joint for seesaw

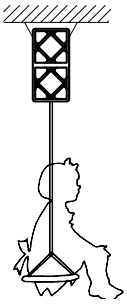

11

跷跷板弹性接头
Elastic joint for reciprocating motion games

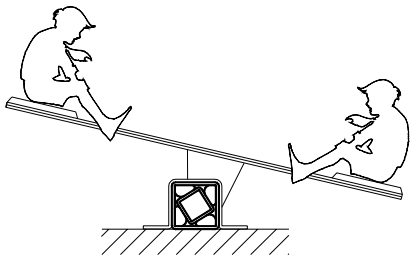

12

电动机底座用悬架
Suspension for motor bases

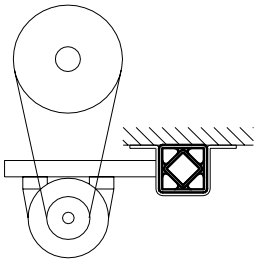

13

拖车或汽车用悬架
Suspension for trailers or vehicles

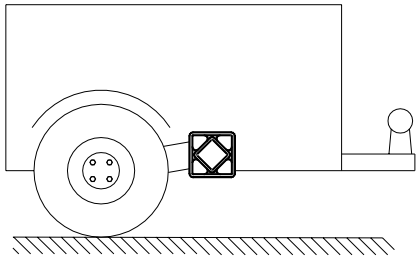

14

水上娱乐用悬架
Suspensions for water amusement

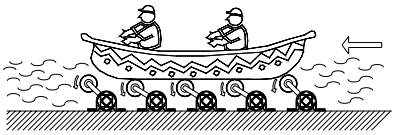

15

VIB 弹性组件 型号: AR-T / *Elastic Components VIB Type: AR-T*

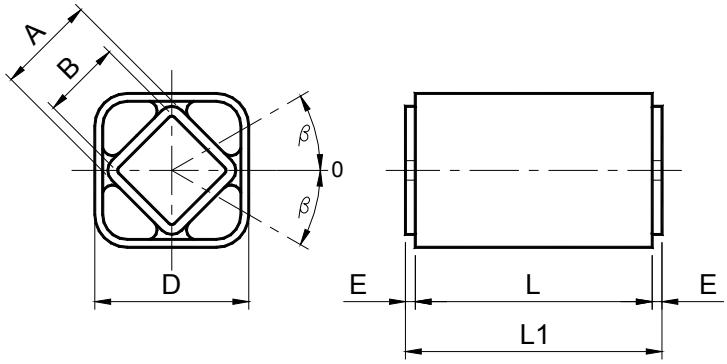

型号 *Type*	编号 N°	A	B +0.25 +0.00	D	E	L	L1 +0.0 -0.3	在不同角度ϟ β的扭矩 Q 以 Nm 表示 *Torque Q in Nm at ϟβ*						重量 *Weight* in kg
								5°	10°	15°	20°	25°	30°	
AR-T 10 x 20	RE020010	11	8	20 +0.10 -0.20	2.5	20	25	0.3	0.8	1.3	1.9	2.8	3.8	0.05
AR-T 10 x 30	RE020011	11	8	20 +0.10 -0.20	2.5	30	35	0.4	1.2	2.0	2.9	4.2	5.7	0.06
AR-T 10 x 50	RE020012	11	8	20 +0.10 -0.20	2.5	50	55	0.7	2.0	3.3	4.8	7.0	9.5	0.09
AR-T 20 x 25	RE020015	15	11	27 +0.20 -0.10	2.5	25	30	0.7	1.6	2.5	3.8	5.4	7.8	0.08
AR-T 20 x 40	RE020016	15	11	27 +0.20 -0.10	2.5	40	45	1.1	2.5	4.0	6.1	8.7	12.5	0.14
AR-T 20 x 60	RE020017	15	11	27 +0.20 -0.10	2.5	60	65	1.6	3.8	6.0	9.2	13.0	18.8	0.20
AR-T 30 x 30	RE020020	18	12	32 +0.10 -0.20	2.5	30	35	1.8	4.2	7.0	10.5	14.3	19.5	0.14
AR-T 30 x 50	RE020021	18	12	32 +0.10 -0.20	2.5	50	55	3.0	7.0	11.7	17.5	23.8	32.5	0.22
AR-T 30 x 80	RE020022	18	12	32 +0.10 -0.20	2.5	80	85	4.8	11.2	18.9	28.0	38.2	52.0	0.35
AR-T 40 x 40	RE020025	27	22	45 +0.20 -0.10	2.5	40	45	4.7	10.2	16.5	25.6	37.6	54.2	0.28
AR-T 40 x 60	RE020026	27	22	45 +0.20 -0.10	2.5	60	65	6.8	15.3	24.8	38.4	56.4	81.3	0.42
AR-T 40 x100	RE020027	27	22	45 +0.20 -0.10	2.5	100	105	11.8	25.5	41.2	64.0	94.0	135.5	0.68
AR-T 50 x 60	RE020030	38	30	60 +0.15 -0.30	5	60	70	12.4	29.0	48.2	74.0	107.5	153.5	0.69
AR-T 50 x 80	RE020031	38	30	60 +0.15 -0.30	5	80	90	16.5	38.7	64.3	98.7	143.4	204.7	0.94
AR-T 50 x120	RE020032	38	30	60 +0.15 -0.30	5	120	130	24.7	58.0	96.4	148.0	215.0	307.0	1.35
AR-T 60 x 80	RE020035	45	35	72 +0.15 -0.30	5	80	90	26.4	60.0	98.6	152.4	210.5	302.0	1.19
AR-T 60 x100	RE020036	45	35	72 +0.15 -0.30	5	100	110	33.0	75.0	123.2	190.5	263.1	377.5	1.48
AR-T 60 x150	RE020037	45	35	72 +0.15 -0.30	5	150	160	49.5	112.5	184.8	285.8	394.6	566.3	2.19
AR-T 70 x120	RE020040	50	40	78 +0.15 -0.30	5	120	130	50.0	121.0	225.0	356.0	513.0	741.0	2.15
AR-T 70 x200	RE020041	50	40	78 +0.15 -0.30	5	200	210	100.0	237.0	428.0	670.0	963.0	1378.0	3.51
AR-T 70 x300	RE020042	50	40	78 +0.15 -0.30	5	300	310	147.0	350.0	630.0	990.0	1431.0	2052.0	5.19

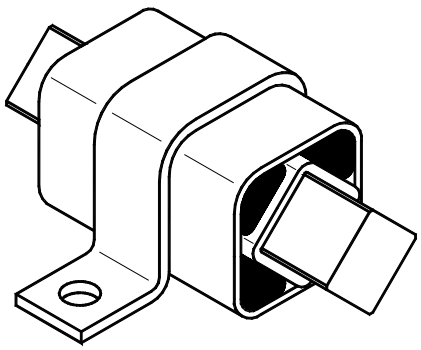

AR-T 型 配 SR 夹具
*Type **AR-T** with **SR** clamp*

材料

外壳和内部方形管为钢制。

处理

外壳为烤炉涂漆，内管为电解锌。

固定

通过具略磨过角的方形拉丝部件，或者使用一个通孔螺栓的摩擦取得内部联接，在后种情况下，我们建议仅使用尺寸为 **10-20-30** 的组件。为了更清楚，内管的承受力在以上表中列出。正如在左图中显示，外部方形结构可使用 **SR** 型夹具固定。

MATERIAL

The external body and the inner square section tube are made of steel.

TREATMENTS

The external body is oven-painted while the inner tube is covered with a RAL varnish in order to maintain the tolerances unaltered.

FITTING

Internal coupling is obtained with square-drawn section with slightly smoothed angles, or by friction using a passing screw but in this case we recommend to use only 10-20-30 sizes. The tolerances of the internal channel are listed in the above table. The external square structure can be fixed by the SR clamp as illustrated in the side drawing.

VIB 弹性组件 型号: AR-P / *Elastic Components VIB Type: AR-P*

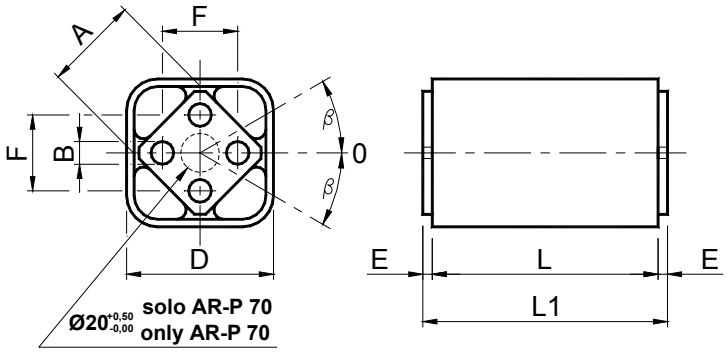

型号 *Type*	编号 N°	A	B	D	E	F	L	L1 +0.0 -0.3	在不同角度∢ β的扭矩 Q 以 Nm 表示 *Torque Q in Nm at ∢ β*						重量 *Weight* in kg
									5°	10°	15°	20°	25°	30°	
AR-P 20 x 25	**RE020065**	15	5 +0.50 +0.00	27 +0.20 -0.10	2.5	10 ±0.2	25	30	0.7	1.6	2.5	3.8	5.4	7.8	0,07
AR-P 20 x 40	**RE020066**	15	5 +0.50 +0.00	27 +0.20 -0.10	2.5	10 ±0.2	40	45	1.1	2.5	4.0	6.1	8.7	12.5	0,11
AR-P 20 x 60	**RE020067**	15	5 +0.50 +0.00	27 +0.20 -0.10	2.5	10 ±0.2	60	65	1.6	3.8	6.0	9.2	13.0	18.8	0,17
AR-P 30 x 30	**RE020070**	18	6 +0.50 +0.00	32 +0.10 -0.20	2.5	12 ±0.3	30	35	1.8	4.2	7.0	10.5	14.3	19.5	0,11
AR-P 30 x 50	**RE020071**	18	6 +0.50 +0.00	32 +0.10 -0.20	2.5	12 ±0.3	50	55	3.0	7.0	11.7	17.5	23.8	32.5	0,18
AR-P 30 x 80	**RE020072**	18	6 +0.50 +0.00	32 +0.10 -0.20	2.5	12 ±0.3	80	85	4.8	11.2	18.9	28.0	38.2	52.0	0,28
AR-P 40 x 40	**RE020075**	27	8 +0.50 +0.00	45 +0.20 -0.10	2.5	20 ±0.4	40	45	4.7	10.2	16.5	25.6	37.6	54.2	0,28
AR-P 40 x 60	**RE020076**	27	8 +0.50 +0.00	45 +0.20 -0.10	2.5	20 ±0.4	60	65	6.8	15.3	24.8	38.4	56.4	81.3	0,39
AR-P 40 x 100	**RE020077**	27	8 +0.50 +0.00	45 +0.20 -0.10	2.5	20 ±0.4	100	105	11.8	25.5	41.2	64.0	94.0	135.5	0,65
AR-P 50 x 60	**RE020080**	38	10 +0.50 +0.00	60 +0.15 -0.30	5	25 ±0.4	60	70	12.4	29.0	48.2	74.0	107.5	153.5	0,65
AR-P 50 x 80	**RE020081**	38	10 +0.50 +0.00	60 +0.15 -0.30	5	25 ±0.4	80	90	16.5	38.7	64.3	98.7	143.4	204.7	0,84
AR-P 50 x 120	**RE020082**	38	10 +0.50 +0.00	60 +0.15 -0.30	5	25 ±0.4	120	130	24.7	58.0	96.4	148.0	215.0	307.0	2,10
AR-P 60 x 80	**RE020085**	45	12 +0.50 +0.00	72 +0.15 -0.30	5	35 ±0.5	80	90	26.4	60.0	98.6	152.4	210.5	302.0	1,12
AR-P 60 x 100	**RE020086**	45	12 +0.50 +0.00	72 +0.15 -0.30	5	35 ±0.5	100	110	33.0	75.0	123.2	190.5	263.1	377.5	1,25
AR-P 60 x 150	**RE020087**	45	12 +0.50 +0.00	72 +0.15 -0.30	5	35 ±0.5	150	160	49.5	112.5	184.8	285.8	394.6	566.3	1,95
AR-P 70 x 120	**RE020090**	50	M12x40	78 +0.15 -0.30	5	40 ±0.5	120	130	50.0	121.0	225.0	356.0	513.0	741.0	1.97
AR-P 70 x 200	**RE020091**	50	M12x40	78 +0.15 -0.30	5	40 ±0.5	200	210	100.0	237.0	428.0	670.0	963.0	1378.0	3.35
AR-P 70 x 300	**RE020092**	50	M12x40	78 +0.15 -0.30	5	40 ±0.5	300	310	147.0	350.0	630.0	990.0	1431.0	2052.0	4.58

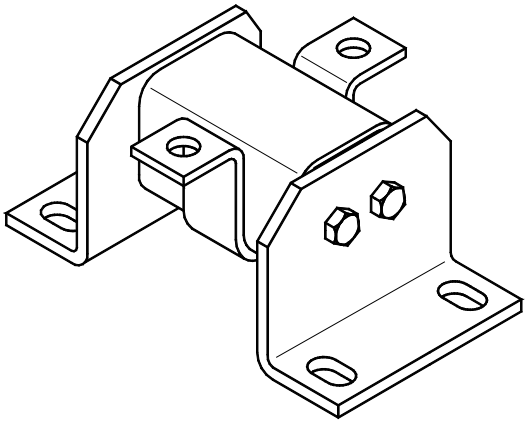

型号 **AR-P** 配 **SR** 和 **SB** 夹具
*Type **AR-P** with **SR** and **SB** clamp*

材料

外壳为钢制，内部方管为铝制拉丝。

处理

外壳为烤炉涂漆，内管由 RAL 涂漆覆盖。

固定

在中心轴以螺钉固定，以保证稳固不移动的安装。如左图例所示，也可使用 **SB** 和 **SR** 型的夹具。这项产品尤其适用于交替和振荡运动。

MATERIAL

The external body is made of steel while the inner square is made of light alloy profile.

TREATMENTS

The external body is oven-painted while the inner square is covered with a RAL varnish.

FITTING

The central pin is fixed with screws for more stable and safe assembly. SB and SR-type clamps can also be used (see side example). This product is ideal for alternating and oscillating movements.

VIB 弹性组件 型号: AR-F / *Elastic Components VIB Type: AR-F*

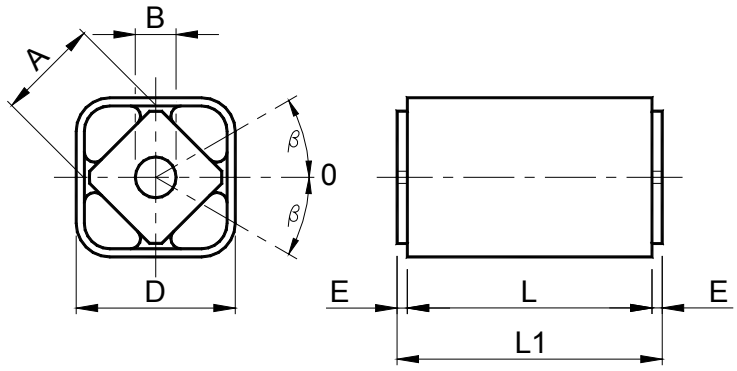

型号 *Type*	编号 N°	A	B	D	E	L	L1 +0.0 -0.3	在不同角度ϵ β的扭矩 Q 以 Nm 表示 *Torque Q in Nm at ϵβ*						重量 *Weight* in kg
								5°	10°	15°	20°	25°	30°	
AR-F 20 x 25	RE020115	15	10 +0.40 +0.20	27 +0.20 - 0.10	2.5	25	30	0.7	1.6	2.5	3.8	5.4	7.8	0.07
AR-F 20 x 40	RE020116	15	10 +0.40 +0.20	27 +0.20 - 0.10	2.5	40	45	1.1	2.5	4.0	6.1	8.7	12.5	0.11
AR-F 20 x 60	RE020117	15	10 +0.40 +0.20	27 +0.20 - 0.10	2.5	60	65	1.6	3.8	6.0	9.2	13.0	18.8	0.17
AR-F 30 x 30	RE020120	18	13 +0.00 -0.20	32 +0.10 - 0.20	2.5	30	35	1.8	4.2	7.0	10.5	14.3	19.5	0.11
AR-F 30 x 50	RE020121	18	13 +0.00 -0.20	32 +0.10 - 0.20	2.5	50	55	3.0	7.0	11.7	17.5	23.8	32.5	0.18
AR-F 30 x 80	RE020122	18	13 +0.00 -0.20	32 +0.10 - 0.20	2.5	80	85	4.8	11.2	18.9	28.0	38.2	52.0	0.28
AR-F 40 x 40	RE020125	27	16 +0.50 +0.30	45 +0.20 - 0.10	2.5	40	45	4.7	10.2	16.5	25.6	37.6	54.2	0.28
AR-F 40 x 60	RE020126	27	16 +0.50 +0.30	45 +0.20 - 0.10	2.5	60	65	6.8	15.3	24.8	38.4	56.4	81.3	0.39
AR-F 40 x 100	RE020127	27	16 +0.50 +0.30	45 +0.20 - 0.10	2.5	100	105	11.8	25.5	41.2	64.0	94.0	135.5	0.65
AR-F 50 x 60	RE020130	38	20 +0.50 +0.20	60 +0.15 - 0.30	5	60	70	12.4	29.0	48.2	74.0	107.5	153.5	0.65
AR-F 50 x 80	RE020131	38	20 +0.50 +0.20	60 +0.15 - 0.30	5	80	90	16.5	38.7	64.3	98.7	143.4	204.7	0.84
AR-F 50 x 120	RE020132	38	20 +0.50 +0.20	60 +0.15 - 0.30	5	120	130	24.7	58.0	96.4	148.0	215.0	307.0	2.10
AR-F 60 x 80	RE020135	45	24 +0.50 +0.20	72 +0.15 - 0.30	5	80	90	26.4	60.0	98.6	152.4	210.5	302.0	1.12
AR-F 60 x 100	RE020136	45	24 +0.50 +0.20	72 +0.15 - 0.30	5	100	110	33.0	75.0	123.2	190.5	263.1	377.5	1.25
AR-F 70 x 120	RE020140	50	30 +0.50 +0.20	78 +0.15 - 0.30	5	120	130	50.0	121.0	225.0	356.0	513.0	741.0	1.97
AR-F 70 x 200	RE020141	50	30 +0.50 +0.20	78 +0.15 - 0.30	5	200	210	100.0	237.0	428.0	670.0	963.0	1378.0	3.35

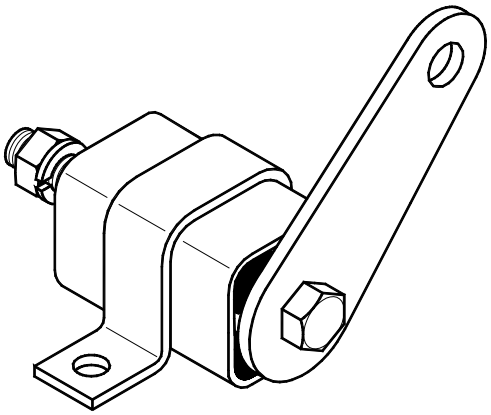

*型号 **AR-F** 配 **SR** 夹具 / Type **AR-F** with **SR** clamp*

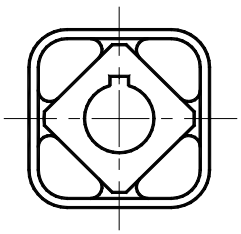

材料

外壳为钢制，内部方管为铝制拉丝。

处理

外壳为烤炉涂漆，内管由 RAL 涂漆覆盖。

固定

使用通孔螺栓的摩擦连接。这种办法使得在 360°内任何角度可与一个手柄迅速联接。我们建议您尤其注意造成扭转角度超过±10°的高摆动负荷，在此情况下，若有需要，我们可提供由 UNI 6604 规范所指定的具有插片槽空洞的产品。

MATERIAL

The external body is made of steel while the inner square is made of light alloy profile.

TREATMENTS

The external body is oven-painted while the inner square is covered with a RAL varnish.

FITTING

Connection is obtained by friction through a passing bolt. As a result, the one-lever coupling can rapidly select and reach a position over 360°. We recommend that you pay special attention to the high loads that need rotations over ±10°. In this case we can supply the product with a hole to house a tongue in compliance with the UNI 6604 norms.

VIB 弹性组件 型号: AC-T / *Elastic Components VIB Type: AC-T*

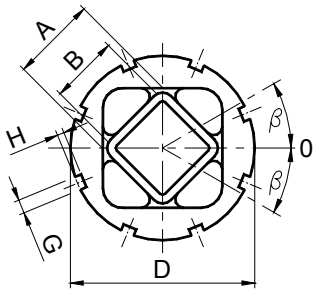

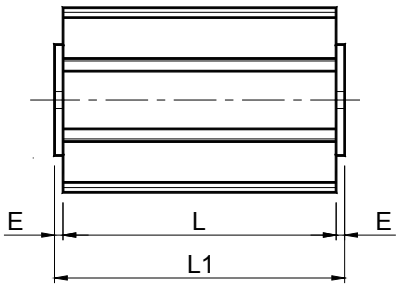

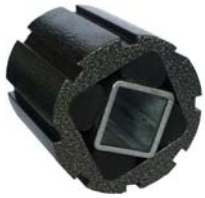

型号 *Type*	编号 N°	A	B +0.25 +0	D	E	G	H	L	L1 +0.0 -0.3	在不同角度 ∢β的扭矩 Q 以 Nm 表示 *Torque Q in Nm at ∢β*						重量 *Weight* in kg
										5°	10°	15°	20°	25°	30°	
AC-T 10 x 20	RE020160	11	8	28 +0.30 +0.00	2.5	4	2.5	20	25	0.3	0.8	1.3	1.9	2.8	3.8	0.02
AC-T 10 x 30	RE020161	11	8	28 +0.30 +0.00	2.5	4	2.5	30	35	0.4	1.2	2.0	2.9	4.2	5.7	0.04
AC-T 10 x 50	RE020162	11	8	28 +0.30 +0.00	2.5	4	2.5	50	55	0.7	2.0	3.3	4.8	7.0	9.5	0.06
AC-T 20 x 25	RE020165	15	11	36 +0.30 +0.00	2.5	5	2.5	25	30	0.7	1.6	2.5	3.8	5.4	7.8	0.05
AC-T 20 x 40	RE020166	15	11	36 +0.30 +0.00	2.5	5	2.5	40	45	1.1	2.5	4.0	6.1	8.7	12.5	0.09
AC-T 20 x 60	RE020167	15	11	36 +0.30 +0.00	2.5	5	2.5	60	65	1.6	3.8	6.0	9.2	13.0	18.8	0.12
AC-T 30 x 30	RE020170	18	12	45 +0.40 +0.00	2.5	5	2.5	30	35	1.8	4.2	7.0	10.5	14.3	19.5	0.12
AC-T 30 x 50	RE020171	18	12	45 +0.40 +0.00	2.5	5	2.5	50	55	3.0	7.0	11.7	17.5	23.8	32.5	0.17
AC-T 30 x 80	RE020172	18	12	45 +0.40 +0.00	2.5	5	2.5	80	85	4.8	11.2	18.9	28.0	38.2	52.0	0.31
AC-T 40 x 40	RE020175	27	22	62 +0.50 +0.00	2.5	6	3	40	45	4.7	10.2	16.5	25.6	37.6	54.2	0.25
AC-T 40 x 60	RE020176	27	22	62 +0.50 +0.00	2.5	6	3	60	65	6.8	15.3	24.8	38.4	56.4	81.3	0.37
AC-T 40 x 100	RE020177	27	22	62 +0.50 +0.00	2.5	6	3	100	105	11.8	25.5	41.2	64.0	94.0	135.5	0.62
AC-T 50 x 60	RE020180	38	30	80 +0.60 +0.00	5	7	3.5	60	70	12.4	29.0	48.2	74.0	107.5	153.5	0.67
AC-T 50 x 80	RE020181	38	30	80 +0.60 +0.00	5	7	3.5	80	90	16.5	38.7	64.3	98.7	143.4	204.7	0.88
AC-T 50 x 120	RE020182	38	30	80 +0.60 +0.00	5	7	3.5	120	130	24.7	58.0	96.4	148.0	215.0	307.0	1.31
AC-T 60 x 80	RE020185	45	35	95 +0.80 +0.00	5	8	4	80	90	26.4	60.0	98.6	152.4	210.5	302.0	1.29
AC-T 60 x 100	RE020186	45	35	95 +0.80 +0.00	5	8	4	100	110	33.0	75.0	123.2	190.5	263.1	377.5	1.54
AC-T 60 x 150	RE020187	45	35	95 +0.80 +0.00	5	8	4	150	160	49.5	112.5	184.8	285.8	394.6	566.3	2.32
AC-T 70 x 120	RE020190	50	40	108 +1.00 +0.00	5	8	4	120	130	50.0	121.0	225.0	356.0	513.0	741.0	2.42
AC-T 70 x 200	RE020191	50	40	108 +1.00 +0.00	5	8	4	200	210	100.0	237.0	428.0	670.0	963.0	1378.0	4.11
AC-T 70 x 300	RE020192	50	40	108 +1.00 +0.00	5	8	4	300	310	147.0	350.0	630.0	990.0	1431.0	2052.0	6.32

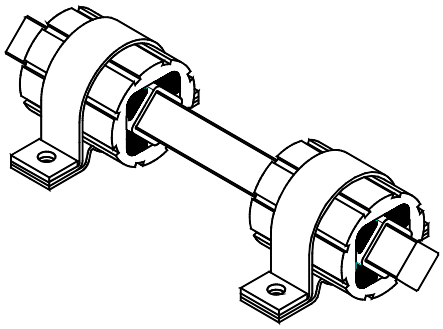

型号 **AC-T** 配 **SC** 夹具
*Type **AC-T** with **SC** clamp*

材料

外壳为铝制拉丝，内部方形管为钢制。

处理

外壳为烤炉涂漆，内管镀锌。

固定

通过具略磨过角的方形拉丝部件，或者使用一个通孔螺栓的摩擦取得内部联接，在后种情况下，我们建议仅使用尺寸为 **10-20-30** 的组件。为了更清楚，内管的承受力在以上表中列出。外部部件可使用 **SC** 型夹具固定。外壳上的槽便于使用侧面孔钩扳手将弹性组件预加负荷。

MATERIALS

The external body is made of light alloy profile while the square inner section tube is made of steel.

TREATMENTS

The external body is oven-painted while the inner tube is covered with a RAL varnish in order to maintain the tolerances unaltered.

FITTING

Internal coupling is obtained with square-drawn section with slightly smoothed angles, or by friction using a passing bolt but in this case we recommend to use only 10-20-30 sizes. The tolerances of the internal channel are listed in the above table. The external structure can be fixed by the SC clamp. The grooves on the outer body help pre-load the elastic element by means of a pin wrench.

VIB 弹性组件 型号: **AC-P** / *Elastic Components **VIB** Type: **AC-P***

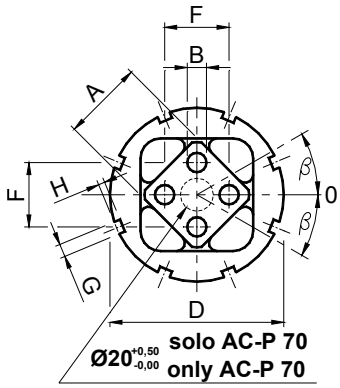

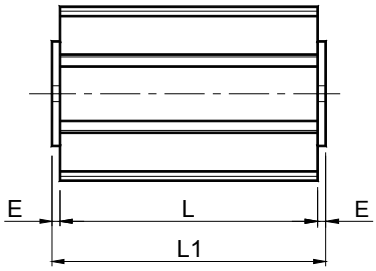

型号 *Type*	编号 N°	A	B	D	E	F	G	H	L	L1 +0.0 -0.3	在不同角度 ∢β的扭矩 Q 以 Nm 表示 *Torque Q in Nm at ∢β*						重量 *Weight* in kg
											5°	10°	15°	20°	25°	30°	
AC-P 20 x 25	**RE020215**	15	$5^{+0.50}_{+0.00}$	$36^{+0.30}_{+0.00}$	2.5	10 ±0.2	5	2.5	25	30	0.7	1.6	2.5	3.8	5.4	7.8	0.05
AC-P 20 x 40	**RE020216**	15	$5^{+0.50}_{+0.00}$	$36^{+0.30}_{+0.00}$	2.5	10 ±0.2	5	2.5	40	45	1.1	2.5	4.0	6.1	8.7	12.5	0.09
AC-P 20 x 60	**RE020217**	15	$5^{+0.50}_{+0.00}$	$36^{+0.30}_{+0.00}$	2.5	10 ±0.2	5	2.5	60	65	1.6	3.8	6.0	9.2	13.0	18.8	0.12
AC-P 30 x 30	**RE020220**	18	$6^{+0.50}_{+0.00}$	$45^{+0.40}_{+0.00}$	2.5	12 ±0.3	5	2.5	30	35	1.8	4.2	7.0	10.5	14.3	19.5	0.12
AC-P 30 x 50	**RE020221**	18	$6^{+0.50}_{+0.00}$	$45^{+0.40}_{+0.00}$	2.5	12 ±0.3	5	2.5	50	55	3.0	7.0	11.7	17.5	23.8	32.5	0.17
AC-P 30 x 80	**RE020222**	18	$6^{+0.50}_{+0.00}$	$45^{+0.40}_{+0.00}$	2.5	12 ±0.3	5	2.5	80	85	4.8	11.2	18.9	28.0	38.2	52.0	0.31
AC-P 40 x 40	**RE020225**	27	$8^{+0.50}_{+0.00}$	$62^{+0.50}_{+0.00}$	2.5	20 ±0.4	6	3	40	45	4.7	10.2	16.5	25.6	37.6	54.2	0.25
AC-P 40 x 60	**RE020226**	27	$8^{+0.50}_{+0.00}$	$62^{+0.50}_{+0.00}$	2.5	20 ±0.4	6	3	60	65	6.8	15.3	24.8	38.4	56.4	81.3	0.37
AC-P 40 x 100	**RE020227**	27	$8^{+0.50}_{+0.00}$	$62^{+0.50}_{+0.00}$	2.5	20 ±0.4	6	3	100	105	11.8	25.5	41.2	64.0	94.0	135.5	0.62
AC-P 50 x 60	**RE020230**	38	$10^{+0.50}_{+0.00}$	$80^{+0.60}_{+0.00}$	5	25 ±0.4	7	3.5	60	70	12.4	29.0	48.2	74.0	107.5	153.5	0.67
AC-P 50 x 80	**RE020231**	38	$10^{+0.50}_{+0.00}$	$80^{+0.60}_{+0.00}$	5	25 ±0.4	7	3.5	80	90	16.5	38.7	64.3	98.7	143.4	204.7	0.88
AC-P 50 x 120	**RE020232**	38	$10^{+0.50}_{+0.00}$	$80^{+0.60}_{+0.00}$	5	25 ±0.4	7	3.5	120	130	24.7	58.0	96.4	148.0	215.0	307.0	1.31
AC-P 60 x 80	**RE020235**	45	$12^{+0.50}_{+0.00}$	$95^{+0.80}_{+0.00}$	5	35 ±0.5	8	4	80	90	26.4	60.0	98.6	152.4	210.5	302.0	1.29
AC-P 60 x 100	**RE020236**	45	$12^{+0.50}_{+0.00}$	$95^{+0.80}_{+0.00}$	5	35 ±0.5	8	4	100	110	33.0	75.0	123.2	190.5	263.1	377.5	1.54
AC-P 60 x 150	**RE020237**	45	$12^{+0.50}_{+0.00}$	$95^{+0.80}_{+0.00}$	5	35 ±0.5	8	4	150	160	49.5	112.5	184.8	285.8	394.6	566.3	2.32
AC-P 70 x 120	**RE020240**	50	M12x40	$108^{+1.00}_{+0.00}$	5	40 ±0.5	8	4	120	130	50.0	121.0	225.0	356.0	513.0	741.0	2.42
AC-P 70 x 200	**RE020241**	50	M12x40	$108^{+1.00}_{+0.00}$	5	40 ±0.5	8	4	200	210	100.0	237.0	428.0	670.0	963.0	1378.0	4.11
AC-P 70 x 300	**RE020242**	50	M12x40	$108^{+1.00}_{+0.00}$	5	40 ±0.5	8	4	300	310	147.0	350.0	630.0	990.0	1431.0	2052.0	6.32

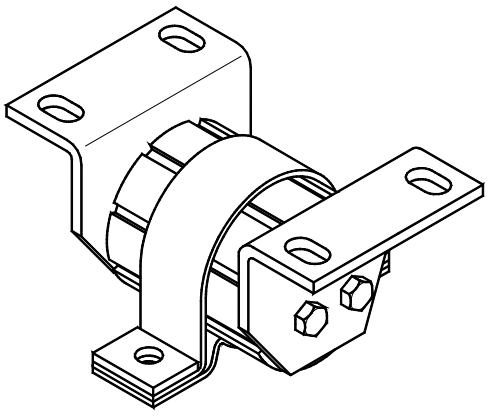

型号 **AC-P** 配 **SC** 和 **SB** 夹具
*Type **AC-P** with **SC** and **SB** clamps*

材料

外壳和内部方管为铝制拉丝。

处理

外壳为烤炉涂漆，内管由 RAL 涂漆覆盖。

固定

在中心轴以螺钉固定，以保证稳固不移动的安装。安装也可使用 **SB** 和 **SY** 型的夹具。外壳的固定可使用 **SC** 型的夹具。外壳上的槽便于使用侧面孔钩扳手将弹性组件预加负荷。

MATERIALS
The external body and the inner square are made of light alloy profile.

TREATMENTS
The external body is oven-painted while the inner square is covered with a RAL varnish.

FITTING
The central pin is fixed with screws for more stable and safe assembly. For the assembling operation, SB and SY-type brackets can also be used. The external element can be fixed with the SC clamps. The grooves on the outer body help pre-load the elastic element by means of a sector key.

VIB 弹性组件 型号: AD-T / *Elastic Components VIB Type: AD-T*

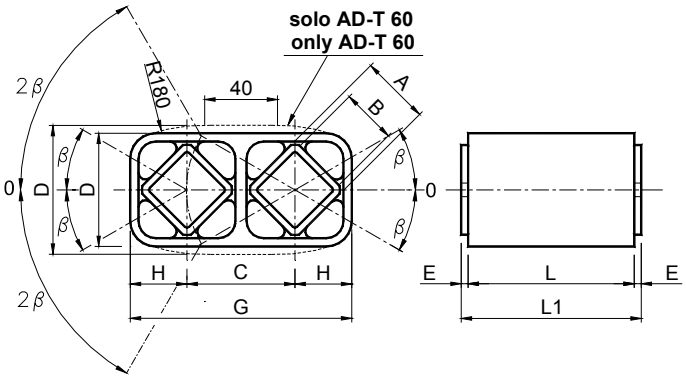

尺寸 20, 30, 40, 50 和 60 / *SIZES* 20, 30, 40, 50 and 60

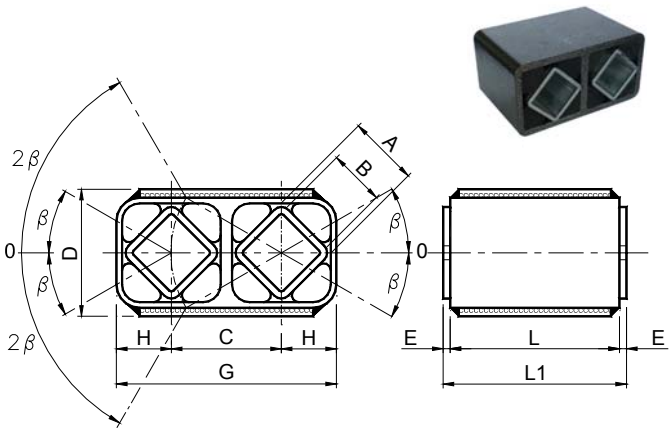

尺寸 70 / *SIZE 70*

型号 *Type*	编号 N°	A	B +0.25 +0	C	D	E	G	H	L	L1 +0.0 -0.3	在不同角度 ∢β的扭矩 Q 以 Nm 表示 *Torque Q in Nm at ∢β*						重量 *Weight* in kg
											5°	10°	15°	20°	25°	30°	
AD-T 20 x 25	RE020265	15	11	25.5	28±0.15	2.5	53.5 ±0.20	13.5	25	30	0.7	1.6	2.5	3.8	5.4	7.8	0.11
AD-T 20 x 40	RE020266	15	11	25.5	28±0.15	2.5	53.5 ±0.20	13.5	40	45	1.1	2.5	4.0	6.1	8.7	12.5	0.15
AD-T 20 x 60	RE020267	15	11	25.5	28±0.15	2.5	53.5 ±0.20	13.5	60	65	1.6	3.8	6.0	9.2	13.0	18.8	0.22
AD-T 30 x 30	RE020270	18	12	31	34±0.15	2.5	65 +0.20 +0.00	16	30	35	1.8	4.2	7.0	10.5	14.3	19.5	0.18
AD-T 30 x 50	RE020271	18	12	31	34±0.15	2.5	65 +0.20 +0.00	16	50	55	3.0	7.0	11.7	17.5	23.8	32.5	0.31
AD-T 30 x 80	RE020272	18	12	31	34±0.15	2.5	65 +0.20 +0.00	16	80	85	4.8	11.2	18.9	28.0	38.2	52.0	0.47
AD-T 40 x 40	RE020275	27	22	44	47±0.15	2.5	91 +0.20 +0.00	22.5	40	45	4.7	10.2	16.5	25.6	37.6	54.2	0.37
AD-T 40 x 60	RE020276	27	22	44	47±0.15	2.5	91 +0.20 +0.00	22.5	60	65	6.8	15.3	24.8	38.4	56.4	81.3	0.54
AD-T 40 x 100	RE020277	27	22	44	47±0.15	2.5	91 +0.20 +0.00	22.5	100	105	11.8	25.5	41.2	64.0	94.0	135.5	0.89
AD-T 50 x 60	RE020280	38	30	60	63±0.20	5	123 +0.30 +0.00	30	60	70	12.4	29.0	48.2	74.0	107.5	153.5	1.07
AD-T 50 x 80	RE020281	38	30	60	63±0.20	5	123 +0.30 +0.00	30	80	90	16.5	38.7	64.3	98.7	143.4	204.7	1.39
AD-T 50 x 120	RE020282	38	30	60	63±0.20	5	123 +0.30 +0.00	30	120	130	24.7	58.0	96.4	148.0	215.0	307.0	2.07
AD-T 60 x 80	RE020285	45	35	73	85±0.20	5	149.4 +1.60 -0.40	36	80	90	26.4	60.0	98.6	152.4	210.5	302.0	2.07
AD-T 60 x 100	RE020286	45	35	73	85±0.20	5	149.4 +1.60 -0.40	36	100	110	33.0	75.0	123.2	190.5	263.1	377.5	2.55
AD-T 60 x 150	RE020287	45	35	73	85±0.20	5	149.4 +1.60 -0.40	36	150	160	49.5	112.5	184.8	285.8	394.6	566.3	3.82
AD-T 70 x 120	RE020290	50	40	78	90±0.20	5	156 +0.40 +0.00	39	120	130	50.0	121.0	225.0	356.0	513.0	741.0	6.21

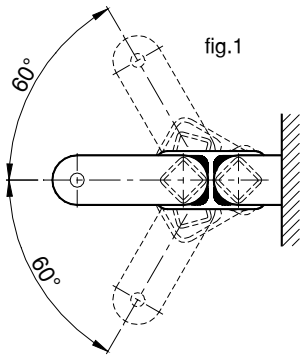

fig.1

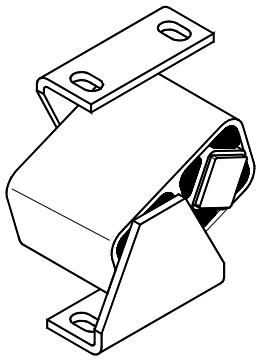

fig.2

材料

尺寸从 20 至 60, 外壳为铝制拉丝，内部方形管为钢制。尺寸为 70，外壳和内部方形管均为钢制。

处理

外壳为烤炉涂漆，所有内管镀锌。

AD-T 组件的优势在于可以之前所展示产品成倍的工作角度操作。通过各内部方形管的系列运作，确实可达到 60° 的扭转角度 (图 1)。与特定夹具配合可作为弹性悬架使用 (图 2) 。

MATERIAL

From size 20 to 60 external body is made out of light alloy profile while inner squares are made of steel. Size 70 external body and inner squares are made of steel The external body and the inner square section tubes are made of steel.

TREATMENTS

The external body is oven-painted while the inner tubes are galvanized.

One advantage of the AD-T element is that a double working angle can be obtained with respect to the products described above. In fact, due to the inner square element arrangement, a rotation of 60° can be achieved (fig.1). Combined with special brackets, they can be used as elastic suspensions (fig.2).

VIB 弹性组件 型号: AD-P / *Elastic Components VIB Type: AD-P*

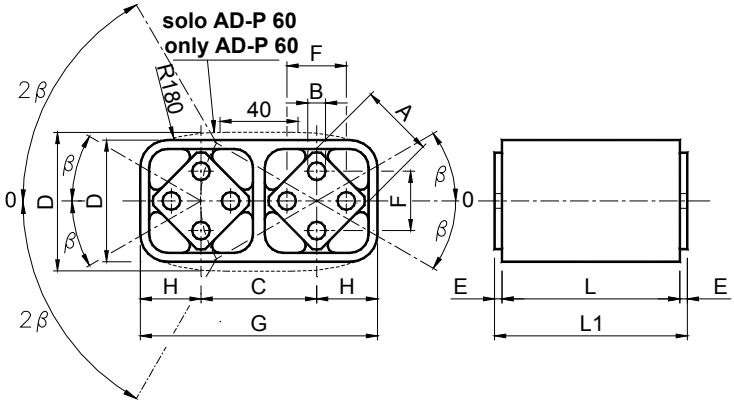

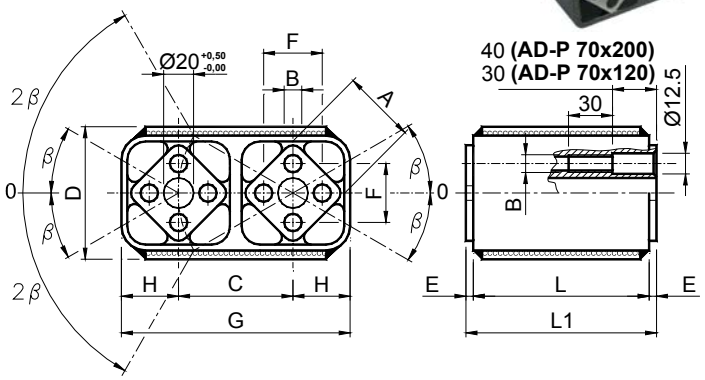

尺寸 20, 30, 40, 50 和 60 / *SIZES 20, 30, 40, 50 and 70*

尺寸 70 / *SIZE 70*

型号 *Type*	编号 N°	A	B	C	D	E	F	G	H	L	L1 +0.0 -0.3	在不同角度 ∢ β的扭矩 Q 以 Nm 表示 *Torque Q in Nm at ∢ β*						重量 *Weight* in kg
												5°	10°	15°	20°	25°	30°	
AD-P 20 x 25	RE020315	15	5 +0.50 +0.00	25.5	28 ±0.15	2.5	10 ±0.2	53.5 ±0.20	13.5	25	30	0.7	1.6	2.5	3.8	5.4	7.8	0,07
AD-P 20 x 40	RE020316	15	5 +0.50 +0.00	25.5	28 ±0.15	2.5	10 ±0.2	53.5 ±0.20	13.5	40	45	1.1	2.5	4.0	6.1	8.7	12.5	0,10
AD-P 20 x 60	RE020317	15	5 +0.50 +0.00	25.5	28 ±0.15	2.5	10 ±0.2	53.5 ±0.20	13.5	60	65	1.6	3.8	6.0	9.2	13.0	18.8	0,15
AD-P 30 x 30	RE020320	18	6 +0.50 +0.00	31	34 ±0.15	2.5	12 ±0.3	65 +0.20 +0.00	16	30	35	1.8	4.2	7.0	10.5	14.3	19.5	0,12
AD-P 30 x 50	RE020321	18	6 +0.50 +0.00	31	34 ±0.15	2.5	12 ±0.3	65 +0.20 +0.00	16	50	55	3.0	7.0	11.7	17.5	23.8	32.5	0,20
AD-P 30 x 80	RE020322	18	6 +0.50 +0.00	31	34 ±0.15	2.5	12 ±0.3	65 +0.20 +0.00	16	80	85	4.8	11.2	18.9	28.0	38.2	52.0	0,30
AD-P 40 x 40	RE020325	27	8 +0.50 +0.00	44	47 ±0.15	2.5	20 ±0.4	91 +0.20 +0.00	22.5	40	45	4.7	10.2	16.5	25.6	37.6	54.2	0,32
AD-P 40 x 60	RE020326	27	8 +0.50 +0.00	44	47 ±0.15	2.5	20 ±0.4	91 +0.20 +0.00	22.5	60	65	6.8	15.3	24.8	38.4	56.4	81.3	0,47
AD-P 40 x 100	RE020327	27	8 +0.50 +0.00	44	47 ±0.15	2.5	20 ±0.4	91 +0.20 +0.00	22.5	100	105	11.8	25.5	41.2	64.0	94.0	135.5	0,78
AD-P 50 x 60	RE020330	38	10 +0.50 +0.00	60	63 ±0.20	5	25 ±0.4	123 +0.30 +0.00	30	60	70	12.4	29.0	48.2	74.0	107.5	153.5	0,87
AD-P 50 x 80	RE020331	38	10 +0.50 +0.00	60	63 ±0.20	5	25 ±0.4	123 +0.30 +0.00	30	80	90	16.5	38.7	64.3	98.7	143.4	204.7	1,15
AD-P 50 x 120	RE020332	38	10 +0.50 +0.00	60	63 ±0.20	5	25 ±0.4	123 +0.30 +0.00	30	120	130	24.7	58.0	96.4	148.0	215.0	307.0	1,68
AD-P 60 x 80	RE020335	45	12 +0.50 +0.00	73	85 ±0.20	5	35 ±0.5	149.4 +1.60 -0.40	36	80	90	26.4	60.0	98.6	152.4	210.5	302.0	1,85
AD-P 60 x 100	RE020336	45	12 +0.50 +0.00	73	85 ±0.20	5	35 ±0.5	149.4 +1.60 -0.40	36	100	110	33.0	75.0	123.2	190.5	263.1	377.5	2,25
AD-P 60 x 150	RE020337	45	12 +0.50 +0.00	73	85 ±0.20	5	35 ±0.5	149.4 +1.60 -0.40	36	150	160	49.5	112.5	184.8	285.8	394.6	566.3	3,35
AD-P 70 x 120	RE020340	50	M12	78	90 ±0.20	5	40 ±0.5	156 +0.40 +0.00	39	120	130	50.0	121.0	225.0	356.0	513.0	741.0	5.95
AD-P 70 x 200	RE020341	50	M12	78	90 ±0.20	5	40 ±0.5	156 +0.40 +0.00	39	200	210	100.0	237.0	428.0	670.0	963.0	1378.0	9.82

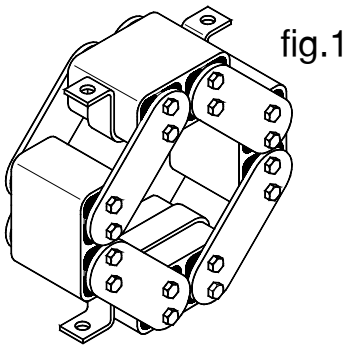

fig.1

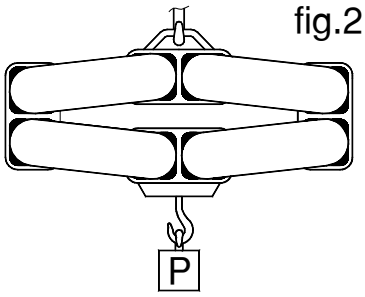

fig.2

材料

尺寸从 20 至 60, 外壳和内部方形管均为铝制。尺寸为 70，外壳为钢制，内部方形管为铝制拉丝。

处理

外壳为烤炉涂漆，为不改变容限，内管由 RAL 涂漆覆盖。

AD-P 组件的用途众多，可用于悬架的制造 (图 1)，或者通过改变手柄的倾斜角度，可用于悬挂负载钩的弹性支撑 (图 2)。

MATERIALS

From size 20 to 60 external body and inner squares are made out of light alloy profile. Size 70 external body is made of steel while inner squares are made out of light alloy profile.

TREATMENTS

The external body is oven-painted while the inner squares are covered with a RAL varnish.

The AD-P elements are multi-purpose and can be used for the assembly of suspensions (fig.1) or, by changing the angle of the levers , as elastic hook supports for suspended loads (fig.2).

VIB 弹性组件 型号: AS-P / *Elastic Components VIB Type: AS-P*

AS-P 20÷50

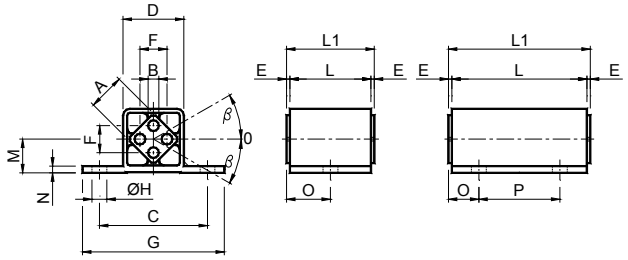

AS-P 60x100
AS-P 70x120

AS-P 70x200

AS-P 80÷1100

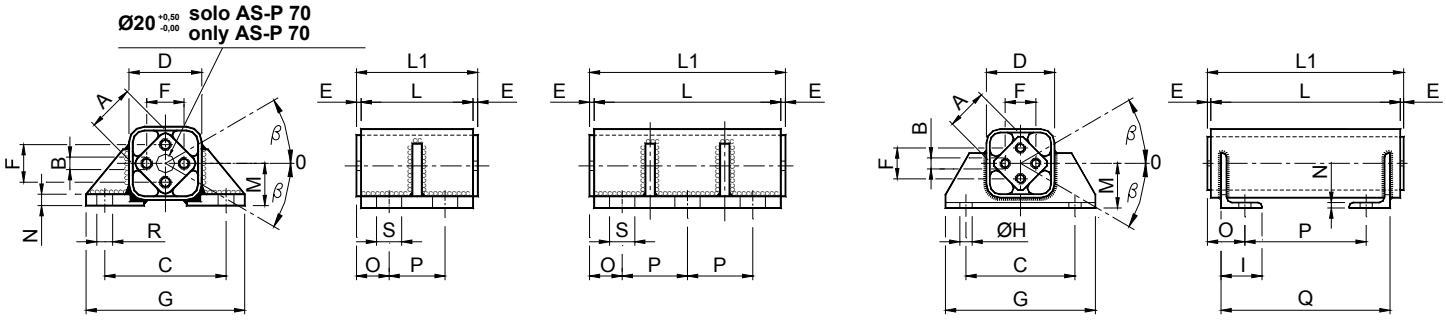

型号 *Type*	编号 N°	A	B	C	D	E	F	G	H	I	L	L1 +0.0 -0.3	M	N	O	P	Q	R	S	重量 *Weight* in kg
AS-P 20 x 25	**RE020365**	15	Ø 5	50	28	2.5	10 ±0.2	65	7	-	25	30	15	3	15.0	-	-	-	-	0.05
AS-P 20 x 40	**RE020366**	15	Ø 5	50	28	2.5	10 ±0.2	65	7	-	40	45	15	3	22.5	-	-	-	-	0.07
AS-P 20 x 60	**RE020367**	15	Ø 5	50	28	2.5	10 ±0.2	65	7	-	60	65	15	3	12.5	40	-	-	-	0.11
AS-P 30 x 30	**RE020370**	18	Ø 6	60	34	2.5	12 ±0.3	80	9	-	30	35	18	3.5	17.5	-	-	-	-	0.08
AS-P 30 x 50	**RE020371**	18	Ø 6	60	34	2.5	12 ±0.3	80	9	-	50	55	18	3.5	27.5	-	-	-	-	0.13
AS-P 30 x 80	**RE020372**	18	Ø 6	60	34	2.5	12 ±0.3	80	9	-	80	85	18	3.5	17.5	50	-	-	-	0.21
AS-P 40 x 40	**RE020375**	27	Ø 8	80	48	2.5	20 ±0.4	105	11	-	40	45	25	4.5	22.5	-	-	-	-	0.21
AS-P 40 x 60	**RE020376**	27	Ø 8	80	48	2.5	20 ±0.4	105	11	-	60	65	25	4.5	32.5	-	-	-	-	0.31
AS-P 40 x 100	**RE020377**	27	Ø 8	80	48	2.5	20 ±0.4	105	11	-	100	105	25	4.5	22.5	60	-	-	-	0.52
AS-P 50 x 60	**RE020380**	38	Ø10	100	66	5	25 ±0.4	125	13	-	60	70	34	6	35.0	-	-	-	-	0.59
AS-P 50 x 80	**RE020381**	38	Ø10	100	66	5	25 ±0.4	125	13	-	80	90	34	6	25.0	40	-	-	-	0.77
AS-P 50 x 120	**RE020382**	38	Ø10	100	66	5	25 ±0.4	125	13	-	120	130	34	6	25.0	80	-	-	-	1.15
AS-P 60 x 100	**RE020386**	45	Ø12	115	78	5	35 ±0.5	145	-	-	100	110	41	8	22.5	65	-	13	20	2.90
AS-P 70 x 120	**RE020390**	50	M12x40	130	87	5	40 ±0.5	170	-	-	120	130	45	12	35.0	60	-	17	27	3.70
AS-P 70 x 200	**RE020391**	50	M12x40	130	87	5	40	170	-	-	200	210	45	12	35.0	70	-	17	27	6.10
AS-P 80 x 150	**RE020395**	60	M16x22	160	100	5	45	220	18	60	150	160	65	8	50.0	60	130	-	-	9.50
AS-P 80 x 200	**RE020396**	60	M16x22	160	100	5	45	220	18	60	200	210	65	8	55.0	100	170	-	-	11.80
AS-P 80 x 300	**RE020397**	60	M16x22	160	100	5	45	220	18	60	300	310	65	8	55.0	200	270	-	-	16.60
AS-P 90 x 200	**RE020400**	70	M20x28	200	120	5	50	260	22	65	200	210	80	9	55.0	100	170	-	-	16.60
AS-P 90 x 300	**RE020401**	70	M20x28	200	120	5	50	260	22	65	300	310	80	9	55.0	200	270	-	-	23.00
AS-P 90 x 400	**RE020402**	70	M20x28	200	120	5	50	260	22	65	400	410	80	9	55.0	300	370	-	-	29.50
AS-P 100 x 200	**RE020405**	80	M20x28	220	136	5	60	280	22	80	200	210	85	10	65.0	80	170	-	-	22.90
AS-P 100 x 300	**RE020406**	80	M20x28	220	136	5	60	280	22	80	300	310	85	10	65.0	180	270	-	-	31.70
AS-P 100 x 400	**RE020407**	80	M20x28	200	136	5	60	280	22	80	400	410	85	10	65.0	280	370	-	-	40.60
AS-P 110 x 250	**RE020410**	100	M24x32	300	170	5	75	380	26	100	250	260	110	12	75.0	110	220	-	-	45.70
AS-P 110 x 400	**RE020411**	100	M24x32	300	170	5	75	380	26	100	400	410	110	12	75.0	260	370	-	-	66.70
AS-P 110 x 500	**RE020412**	100	M24x32	300	170	5	75	380	26	100	500	510	100	12	75.0	360	470	-	-	80.70

材料

尺寸为 20 至 50，外壳和内部方管为铝制拉丝。尺寸为 60 和 70，外壳为钢制，内部方管为铝制拉丝；尺寸从 80 到 110，外壳和内部方管均为钢制。

处理

外壳为烤炉涂漆，内管由 RAL 涂漆覆盖。

固定

外壳包括固定法兰：这一点简化安装操作。

这些产品用于高负载和在轴中心周围的振荡运动。

MATERIALS

From size 20 to 50 external body and inner square are made our of light alloy profile. Size 60 and 70 external body are made of steel while inner square is made our of light alloy profile.

TREATMENTS

The external body is oven-painted while the inner square is covered with a RAL varnish.

型号 *Type*	编号 N°	在不同角度 n ∢ β的扭矩 Q 以 Nm 表示 *Torque Q in Nm at* n ∢ *β*						型号 *Type*	编号 N°
		5°	10°	15°	20°	25°	30°		
AS-P 20 x 25	**RE020365**	0.7	1.6	2.5	3.8	5.4	7.8	**AS-F 20 x 25**	**RE020420**
AS-P 20 x 40	**RE020366**	1.1	2.5	4.0	6.1	8.7	12.5	**AS-F 20 x 40**	**RE020421**
AS-P 20 x 60	**RE020367**	1.6	3.8	6.0	9.2	13.0	18.8	**AS-F 20 x 60**	**RE020422**
AS-P 30 x 30	**RE020370**	1.8	4.2	7.0	10.5	14.3	19.5	**AS-F 30 x 30**	**RE020425**
AS-P 30 x 50	**RE020371**	3.0	7.0	11.7	17.5	23.8	32.5	**AS-F 30 x 50**	**RE020426**
AS-P 30 x 80	**RE020372**	4.8	11.2	18.9	28.0	38.2	52.0	**AS-F 30 x 80**	**RE020427**
AS-P 30 x 40	**RE020375**	4.7	10.2	16.5	25.6	37.6	54.2	**AS-F 30 x 40**	**RE020430**
AS-P 40 x 60	**RE020376**	6.8	15.3	24.8	38.4	56.4	81.3	**AS-F 40 x 60**	**RE020431**
AS-P 40 x 100	**RE020377**	11.8	25.5	41.2	64.0	94.0	135.5	**AS-F 40 x 100**	**RE020432**
AS-P 50 x 60	**RE020380**	12.4	29.0	48.2	74.0	107.5	153.5	**AS-F 50 x 60**	**RE020435**
AS-P 50 x 80	**RE020381**	16.5	38.7	64.3	98.7	143.4	204.7	**AS-F 50 x 80**	**RE020436**
AS-P 50 x 120	**RE020382**	24.7	58.0	96.4	148.0	215.0	307.0	**AS-F 50 x 120**	**RE020437**
AS-P 60 x 100	**RE020386**	33.0	75.0	123.0	191.0	263.0	378.0		
AS-P 70 x 120	**RE020390**	50.0	121.0	225.0	356.0	513.0	741.0		
AS-P 70 x 200	**RE020391**	100.0	237.0	428.0	670.0	963.0	1378.0		
AS-P 80 x 150	**RE020395**	70.0	160.0	283.0	440.0	668.0	955.0		
AS-P 80 x 200	**RE020396**	93.0	213.0	378.0	586.0	890.0	1274.0		
AS-P 80 x 300	**RE020397**	140.0	320.0	566.0	880.0	1336.0	1910.0		
AS-P 90 x 200	**RE020400**	134.0	360.0	618.0	985.0	1415.0	2015.0		
AS-P 90 x 300	**RE020401**	201.0	540.0	927.0	1478.0	2122.0	3022.0		
AS-P 90 x 400	**RE020402**	268.0	720.0	1236.0	1970.0	2830.0	4030.0		
AS-P 100 x 200	**RE020405**	192.0	480.0	806.0	1230.0	1800.0	2570.0		
AS-P 100 x 300	**RE020406**	288.0	720.0	1209.0	1845.0	2700.0	3855.0		
AS-P 100 x 400	**RE020407**	384.0	960.0	1612.0	2460.0	3600.0	5140.0		
AS-P 110 x 250	**RE020410**	385.0	1020.0	1720.0	2680.0	3890.0	5990.0		
AS-P 110 x 400	**RE020411**	616.0	1632.0	2752.0	4288.0	6224.0	9584.0		
AS-P 110 x 500	**RE020412**	770.0	2040.0	3440.	5360.0	7780.0	11980.0		

VIB 弹性组件 型号: AS-F / *Elastic Components VIB Type: AS-F*

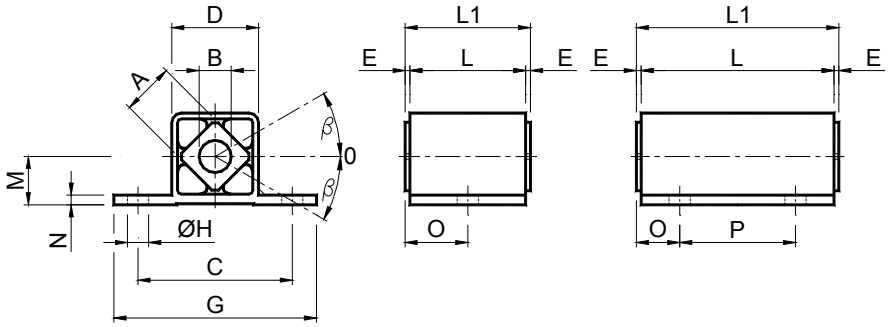

型号 *Type*	编号 N°	A	B	C	D	E	G	H	L	L1 $^{0}_{-0.3}$	M	N	O	P	重量 *Weight* in kg
AS-F 20 x 25	**RE020420**	15	10 $^{+0.4}_{+0.2}$	50	27	2.5	65	7	25	30	15	3	15.0	-	0.07
AS-F 20 x 40	**RE020421**	15	10 $^{+0.4}_{+0.2}$	50	27	2.5	65	7	40	45	15	3	22.5	-	0.10
AS-F 20 x 60	**RE020422**	15	10 $^{+0.4}_{+0.2}$	50	27	2.5	65	7	60	65	15	3	12.5	40	0.15
AS-F 30 x 30	**RE020425**	18	13 $^{-0.0}_{-0.2}$	60	32	2.5	80	9	30	35	18	4	17.5	-	0.10
AS-F 30 x 50	**RE020426**	18	13 $^{-0.0}_{-0.2}$	60	32	2.5	80	9	50	55	18	4	27.5	-	0.15
AS-F 30 x 80	**RE020427**	18	13 $^{-0.0}_{-0.2}$	60	32	2.5	80	9	80	85	18	4	17.5	50	0.25
AS-F 40 x 40	**RE020430**	27	16 $^{+0.5}_{+0.3}$	80	45	2.5	105	11	40	45	25	5	22.5	-	0.25
AS-F 40 x 60	**RE020431**	27	16 $^{+0.5}_{+0.3}$	80	45	2.5	105	11	60	65	25	5	32.5	-	0.36
AS-F 40 x 100	**RE020432**	27	16 $^{+0.5}_{+0.3}$	80	45	2.5	105	11	100	105	25	5	22.5	60	0.58
AS-F 50 x 60	**RE020435**	38	20 $^{+0.5}_{+0.2}$	100	60	5	125	13	60	70	34	6	35.0	-	0.64
AS-F 50 x 80	**RE020436**	38	20 $^{+0.5}_{+0.2}$	100	60	5	125	13	80	90	34	6	25.0	40	0.89
AS-F 50 x 120	**RE020437**	38	20 $^{+0.5}_{+0.2}$	100	60	5	125	13	120	130	34	6	25.0	80	1.50

材料

外壳和内部方管均为铝制拉丝。

处理

外壳为烤炉涂漆，内管由 RAL 涂漆覆盖。

固定

外体包括固定法兰：这样可简化安装操作。

MATERIALS

The external body and the inner square are made of light alloy profile.

TREATMENTS

The external body is oven-painted while the inner square is covered with a RAL varnish.

FITTING

The external body includes the fixing flanges: this makes more easy the assembly operations.

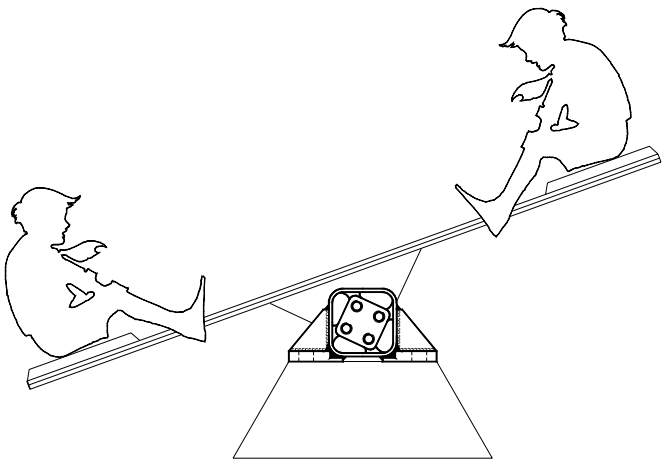

应用实例:

弹性组件 AS-P 或 AS-F 可用于设计儿童游戏玩具。

Application example:
The AS-P or AS-F elastic elements can be used for the realization of children games.

机械振动原理 / *VIBRATION MECHANICAL THEORY*

由于振动现象对机器动态行为及部件寿命所造成的影响，它们在机械设备的设计中是极为重要的。

但是，如果不将机械系统成为一份简图，其中只分析沿着 3 条主要轴线的主要振动源，对于这些现象的研究几乎是不可能的。在大多数情况下，这种简化几乎总是足够的。

作为机器设备学习内容的振动系统可分为两类：

- 自由振动；
- 受迫振动。

在不存在外界施压时，即机械系统不受没有外界激励时，产生自由振动；在这种情况下，机械系统以与其固有频率相等的频率振动，这些固有频率是系统自身的频率，仅取决于其重量和硬度的分配。受迫振动为在受外界激励下所产生的振动，比如电机所造成的振动。

在激励的原因为振动性时，系统以此频率振动，但是如果这种频率与一种固有频率同时发生的话，将产生共振的情况，也就是振幅将急剧增加。塔科马海峡吊桥倒塌事件便是一个由于共振情况造成的典型的例子。事件发生于 1940 年 11 月 7 日，在美国华盛顿州，当时虽然风速仅为 72 Km/h，桥梁的不断振动使它进入共振状况。在这种特殊情况下，振动加剧，使得街面不断的受到振动波的冲击，直至整个的桥面结构崩塌造成桥倒塌。

由于摩擦和其他阻力造成的能量耗散，所有实际的振动系统都会逐渐衰减。如果阻尼小，对系统固有频率没有太大影响，若阻尼高，可能引起与共振接近的频率。

因此机械振动由如下因素所表示：

- 振幅 ($\frac{D_m}{2}$): 偏离参考值的最大波动
- 频率 (f_n): 在一定时间单位内的振动次数

Vibrating phenomena play a key role in mechanical engineering because of their effects on the dynamic behaviour of machines and their parts.
The above phenomena can be studied only if the system is broken down into a diagram, in order to focus on and analyse its main vibration sources along the 3 main axis. In the majority of the cases, this simplification seems to be sufficient.
Vibrating systems, which are the object under study in mechanics of machinery, can be divided in two classes:

- *with free vibrations;*
- *with forced vibrations.*

Free vibrations occur in the absence of external forcing, i.e. when no external forces influence the system; in this case, the system will oscillate with a frequency that is characteristic of that system. The frequency is known as the system's natural frequency and depends only on the distribution and the stiffness of its system's mass. Forced vibrations occur under the excitation of external forces such as motor-driven forces.
When excitation is driven by oscillations, the system shares the same vibrational frequency, but if this frequency equals one of its natural frequencies, the system is said to be in a state of resonance, i.e. the tendency of the system to oscillate with high amplitude. The Tacoma Narrows Bridge failure is an example of the effects caused by vibrations. On November 7, 1940 in the State of Washington, the bridge gave way before winds of only 72 Km/h. It was not just the speed of these winds, but the fact that they produced oscillations of resonant frequency in step with the oscillations of the structure. Under such a particular condition, oscillations increased so much that they induced continuous vibrational waves along the road surface, caused the bridge structure to twist and, ultimately, to crumble.
Vibrating systems are all subjected to damping, given the energy dissipation caused by friction or other resistance. Reduced damping effects have a little impact on the system's natural frequencies; on the contrary, if strong, they play a key role in frequencies near to resonance.
Mechanical vibration is characterized by :

- *Amplitude ($\frac{D_m}{2}$): maximum variation from a reference value*
- *Frequency (f_n): the number of oscillations within a time unit.*

振动波 / *VIBRATION WAVE*

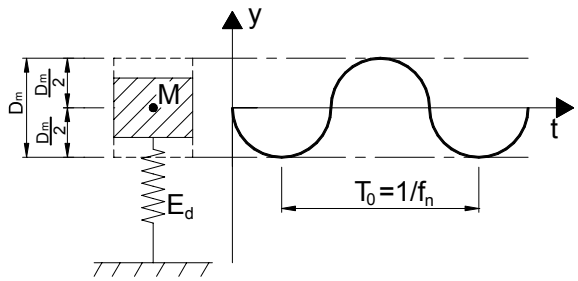

D_m: 最大振幅 / *maximum amplitude*
f_n : 频率 / *frequency*
T_0: 振动时间 / *Oscillation time*
M: 系统重量 / *System mass*
E_d: 系统动态弹性 / *System dynamic spring value*
y: 纵坐标 [mm] / *frame axis [mm]*
t: 横坐标 [s] / *abscissa axis [s]*

具曲柄连杆制动的输送机：简介

VIB 弹性组件技术可用于制造用于传送不同种类和尺寸物料的高效率振动输送机。与传统系统相比，VIB 弹性组件有助于建造可提供更具优势的输送系统：

- 设计和建造简单经济
- 耐久性高，维修率低
- 数不胜数的应用范围: 输送机、振动筛、校准器、搅拌器、 机动筛等。

使用 VIB 振动组件所建造的振动槽可汇集由沿着物料运送平面的偏心轮所产生的振动。使用 VIB 技术而设计的振动输送机可用于流动式运送（运输）和跳式 (筛选和校准）振动槽的设计和建造。

流动式输送振动槽在低频率 (2 Hz)和高振幅 (最高约 30 cm)条件下使用，尤其适用于大尺寸物料的输送。

跳式输送机在高频率 (至 10 Hz) 和低振幅 (最高约 2 cm)条件下使用。

这类输送机特别适用于采矿 - 采石业、水果蔬菜加工、烟草加工、回收、筛面、饲料混合等。

CONVEYORS ACTUATED BY A CONNECTING ROD-CRANK DEVICE: INTRODUCTION

VIB elastic elements are engineered in order to obtain high-performance oscillating conveyors that carry material of different type and size. VIB elastic elements have suitable features for the production of highly advanced conveyors compared to the traditional ones and provide the following improvements:

- *engineering and production is facilitated and money-saving*
- *long life and reduced maintenance*
- *multi-faceted applications/solutions: conveyors, screens, calibrators, stirrers, etc.*

The vibrating channels produced with VIB oscillating elements allow to propagate the vibrations generated by an eccentric along the forward plane of the material. Vibrating conveyors - backed by the VIB technology - may be used to design and produce vibrating channels for fluid conveyance as well as hopping channels (screening and calibration). Fluid vibrating channels are used at low frequencies (2Hz) and high amplitudes (max approx. 30 cm) and are ideal for bulky material.
Hopping conveyors work at high frequencies (up to 10 Hz) and reduced amplitudes (max approx. 2 cm). These conveyors are largely used in the mining-quarrying industry, fruit and vegetable processing, tobacco processing, recycling, flour sifting, fodder mixing, etc.

单重块振动组

在图 1 中所示的系统是用于建造中等尺寸和长尺寸散装物料输送的最简单经济的方法。这项设备需要一条滑槽 (1), 由弹性悬架(2)支撑，由曲柄连杆制动系统(3)制动。因振动槽可用于直至 1.6g 的加速，这些输送机由坚硬的结构设计，牢固地在地面固定。由于这些因素，有必要正确地计算机器的尺寸，而且适当 VIB 弹性组件的选择有助于对振动的吸收和振动槽的最佳运作。

这项设备需要由一些悬架装置支撑的一条滑槽，每个悬架由两个 **BT-F** 组成，滑槽由作为球形弹性接头的 **TB** 连杆头制动。这项简单的应用可用于任何动力不太高的情况下，因为所有的负载和应力都加在 **BT-F** 上。

图 2，表示建造悬架的最佳方式，这项系统涉及到用六角棒车削加工的连接单位。在六角棒头尾的螺纹应为一个右旋一个左旋，这样在设备安装过程中可使用活动扳手对轴距做一些不可避免的轻微修正。

使用同样的建造系统，但是具固定的悬架轴距，VIB 产品系列中提供 **TP-S** 或者 **TP-F** 弹性组件。

为了降低使用功率，在设计过程中可在特定条件下进行设备运转，也就是在共振条件下或者以一个接近系统固有频率的条件下将设备运转。在这种特殊条件下，振幅将大程度地增高，因而可使用较低的驱动功率，但是造成结构所受应力增高。

One-mass vibrating unit

The system illustrated in fig. 1 is the most simple and inexpensive method to build conveyors for medium to large sized unpacked material. This system consists of a sliding chute (1) supported by elastic suspensions (2) actuated by a connecting rod-crank device (3). These conveyors are used with rigid structures and are firmly fixed to the ground because the vibrating channel may work with accelerations up to 1.6 g. Given the above, correct dimensioning of the machine is essential, while the appropriate choice of the VIB elastic elements improves the vibration absorption and optimizes the execution of the vibrating channel.
This system consists of a chute supported by suspensions, each formed by 2 BT-F and actuated by a connecting rod TB that acts as an elastic bearing. This simple application can be used anytime dynamic forces are not too high because BT-F are charged with all loads and stresses.
Figure 2 illustrates the ideal design of a suspension using one connecting unit obtained by drawing an hexagonal bar. The bar end threads must be right-hand and left-hand respectively: this allows any unavoidable adjustments of the axle base which can be carried out with a monkey spanner when setting up the system.
Within the VIB range, elastic elements TP-S or TP-F are designed for use with similar engineering systems but with fixed suspension axle base.
During the design phase, power can be reduced by making the plant work under resonance condition, i.e. under a frequency near to that of the system. Under this particular condition, the oscillation amplitudes greatly grow and motor drive power can be reduced yet with an increase in the structure stresses.

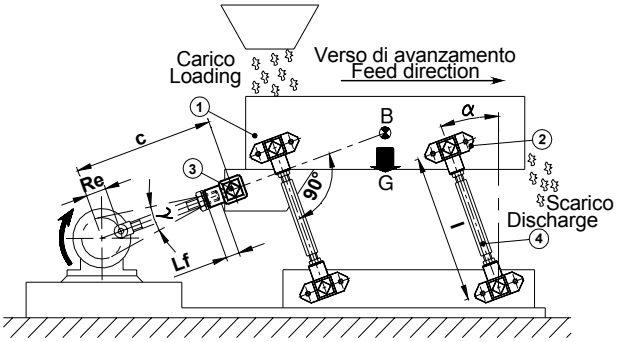

Fig.1

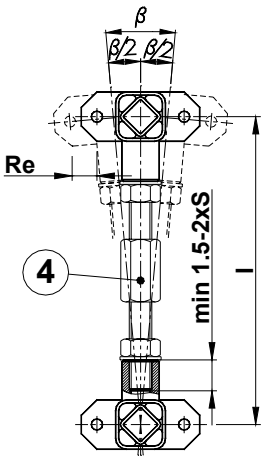

Fig.2

图例说明 / *Key*:

1: 滑槽 / *Sliding chute*

2: VIB BT-F 型悬架/ *BT-F suspension*

3: VIB TB 型连杆头/ *TB Drive head*

4: 连接单位 / *Connecting rod*

B: 重心 / *Center of gravity*

G: 重量 / Weight

I: 轴距 / *Distance between centers*

L_f: 螺纹段最低长度 (1.5-2 S)
Min Screwed-in lenght (1.5-2 S)

S: VIB TB 型或 BT-F 型连杆头的螺纹周距
Threaded diameter inside types TB or BT-F

R_e: 曲柄半径 / *Sliding crank radius*

α: 安装角度从 20°至 30°
Rocker angle from 20° to 30°

β: 工作角度 / *Working angle*

具重块和平衡重块的平衡式振动组

在动力和惯性力极高的情况下，在对输送机运作功能和效率有极高要求时，建议使用具备重块和平衡重块的振动系统，这样设备所受的应力不完全由底座承担而是机动性地由两份振动重体分担。图 3 显示一架使用曲柄连杆制动的两份平衡重块的振动输送机的简图。这项设备包括由 **TD-S** 悬架支撑的槽，槽通过作为弹性接头的 **AD-P** 弹性组件驱动。在这些具双重块的输送机中可在上端滑动渠或下端平衡重块同样驱动。另外还利用 **TD-F** 代替 **TD-S**，这些产品唯一不同之处为如下所示的不同安装方式。滑动渠 (1)与平衡重块 (2) 具同等重量，因此在振动过程中，两份重块因作相反的运动而取得动力平衡。这项系统另外还可能使用平衡重块的振动而获得与上端滑动渠运送方向相同的第二滑动渠。

Balanced vibrating unit with mass and counter mass

With high dynamic and inertial forces, and any time there is the need for an efficient and high-performance conveyor, we recommend that you use an oscillation system with mass and counter mass because stresses are never completely discharged in foundations but dynamically compensated by the two oscillating masses. Figure 3 illustrates the diagram of a two-balanced-mass oscillating conveyor actuated by a connecting-rod/crank device. This plant consists of a chute supported by TD-S suspensions and enabled by an AD-P elastic element that acts as the elastic joint. These two-mass conveyors can be operated both from the upper sliding channel and the lower counter mass. As an alternative, TD-S can be replaced by TD-F which differs only in the coupling procedures as illustrated below. The sliding channel (1) and the counter mass (2) have the same weight. Therefore, while they oscillate, their two masses are dynamically balanced because one moves in the opposite direction to the other. This system also allows to exploit the oscillation of the counter mass to obtain a second sliding channel with the same direction of the upper one.

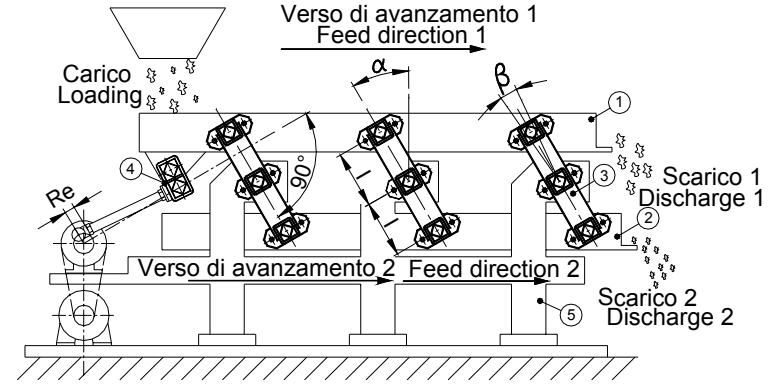

Fig.3

图例说明 / *Key*:

1: 上端滑行槽 / *Superior sliding chute*

2: 下端平衡重块 (下端槽)
Counter mass (Inferior sliding chute)

3: VIB TD-S 型悬架 / *TD-S Suspension*

4: VIB AD-P 型振动组件 / *AD-P Oscillating Element*

5: 底座 / *Base plate*

α: 安装角度从 20°至 30° / *Rocker angle from 20° to 30°*

β: 工作角度 / *Working angle*

I: 轴距 / *Distance between centers*

共振组

使用单重量块或双平衡重块的振动输送机可在共振动力方案情况下设计，目的在于增高振幅同时减低系统所要求的功率。但是这种条件比非共振动力方案来讲，需要使用更多的弹性悬架组件。VIB 弹性组件可为系统在共振条件下运转提供必要的动力弹性，但是同时可避免振动在机器结构内部和通过底座对地面进行的传播。

Resonance vibrating unit

One-mass or two-mass-balanced vibrating conveyors can be designed to work under resonance dynamic regimen in order to increase the oscillation amplitudes and at the same time reduce the power required by the system. This condition however involves a larger number of elastic suspensions compared to dynamic regimen out of resonance. VIB elastic elements provide the necessary dynamic elasticity to the system which can operate under resonance conditions but avoiding that vibrations propagate to the machine structure and, through the foundations, to the ground.

计算系统和公式 / *CALCULATION SYSTEMS AND FORMULA*

术语 / *Nomenclature:*

符号 *Symbol*	描述 *Description*	计量单位 *Measure unit*
A	安装角度 *Rocker angle*	[°]
B	工作角度 *Working angle*	[°]
Γ	振动角度 *Oscillation angle*	[°]
B	重心 *Center of gravity*	
D_m	最大振幅 *Maximum amplitude*	[mm]
E_d	动力弹性 *Dynamic spring value*	[N/mm]
E_t	总弹性 *Total spring value*	[N/mm]
f_n	固有频率 *Own frequency*	[Hz]
f_0	进入系统的频率 Entrance frequency in the system	[Hz]
F	冲力 *Acceleration force*	[N]
G	重量 *Weight*	[N]

符号 *Symbol*	描述 *Description*	计量单位 *Measure unit*
g	重力加速 *Gravitational acceleration*	9.81 [m/s^2]
I	轴距 *Distance between centers*	[mm]
J	机器指数 *Machine factor*	
m	重量 *Mass*	[Kg]
M_d	动力扭距 *Dynamic torque*	[Nm/°]
n	旋转速度 *Rotation Velocity*	[min^{-1}]
R_e	曲柄半径 *Crank radius*	[mm]
V_a	理论送料速度 *Theoretical feed velocity of the material*	[m/min]
V_r	实际送料速度 *Real feed velocity of the material*	[m/min]
W	偏心轴上理论驱动力 *Theoretical driving power on crank shaft*	[kW]
λ	送料速度降低系数 *Reduction coefficient feed velocity*	

主要计算公式 / *Main calculation formula:*

公式 / *Formula*	计量单位 *Measure unit*
$G = m \cdot g$	[N]
$E_t = 0{,}001 \cdot m \cdot \left(\frac{2\pi}{60} \cdot n\right)^2$	[N/mm]
$J = \frac{\left(\frac{2\pi}{60} \cdot n\right)^2 \cdot R_e}{9810}$	
$D_m = 2 \cdot R_e$	[mm]

公式 / *Formula*	计量单位 *Measure unit*
$f_0 = \frac{n}{60}$	[Hz]
$F = J \cdot m \cdot g$	[N]
$V_r = V_a \cdot \lambda$	[m/min]
$W = \frac{D_m \cdot J \cdot m \cdot g \cdot n}{9550 \cdot 2 \cdot 1000 \cdot \sqrt{2}}$	[kW]

理论速度图 / *Theoretical velocity graph:*

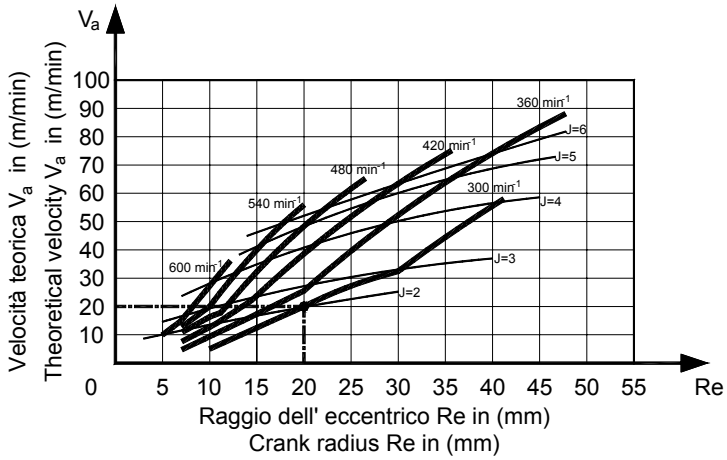

使用此图可计算具以 α=30°的角度安装的弹性组件并以曲柄连杆驱动输送机中的理论送料速度。

但是实际送料速度 V_r 取决于所输送的产品的种类。实际速度 V_r 以此关系式计算:

$V_r = V_a \cdot \lambda$

在此 λ 为取决于所输送物料种类的内聚性的降低系数。

This graph shows the theoretical feed velocity of the material on a conveyor actuated by the connecting-rod/crank device with suspensions mounted at an angle of α=30°.
Real feed velocity V_r depends on the type of product fed. Real velocity V_r is the result of the relation: $V_r = V_a \cdot \lambda$ where λ is the reduction coefficient due to the cohesion that depends on the type of material to be conveyed.

输送产品种类 ***Carried product type***	**λ**	**输送产品种类** ***Carried product type***	**λ**
砾石 *Gravel*	0.95	木屑 *Wood chips*	0.75
沙 *Sand*	0.70	带叶菜 *Leaf vegetable*	0.70
煤(精颗粒) *Coal (small granulometry)*	0.80	糖 *Sugar*	0.85
煤(粗颗粒) *Coal (coarse granulometry)*	0.85	盐 *Salt*	0.95

计算实例: 计算使用 VIB 弹性悬架安装和连杆曲柄驱动的砾石输送机上物料的实际速度

***CALCULATION EXAMPLE**: Determination of the real velocity of the material on a gravel conveyor actuated by a connecting rod/crank device with VIB elastic suspensions*

初始数据 / *Given data*:

n: 偏心轮旋转速度 / *Crank rotation velocity*: 300 min^{-1}

R_e: 曲柄半径 / *Crank radius*: 20 mm

α: 安装角度 / *Rocker angle*: 30°

λ: 降低系数 / *Reduction coefficient feed velocity*: 0.95 (砾石 / *gravel*)

未知数据 / *Unknow values*:

V_a: 理论送料速度 / *Theoretical feed velocity*

V_r: 实际送料速度 / *Real feed velocity*

计算步骤 / *Calculation steps*:

J: 振动机器指数/ *Oscillating machine factor* = $\dfrac{\left(\dfrac{2 \cdot \pi \cdot n}{60}\right)^2 \cdot Re}{9810} = \dfrac{\left(\dfrac{\pi \cdot 300}{30}\right)^2 \cdot 20}{9810} = 2.0$

V_a: 理论送料速度 (“由“理论速度图”得出)
Theoretical feed velocity = 20 m/min *(obtained from “theorical velocity graph”)*

V_r: 实际速度 / *Real feed velocity* = $V_a \cdot \lambda$ = 20 · 0.95 = 19 m/min.

振动组件选择列表: 连杆 - 曲柄驱动装置

SELECTION TABLE OF OSCILLATING COMPONENTS: CONNECTING ROD/CRANK DEVICE

← 应用 *Application* / 产品 / *Product* →	型号 – *Type*					
驱动装置 / *Device*	**BT-F**	**TB**	**TP-S TP-F**	**TD-S TD-F**	**AD-P**	**GF**
	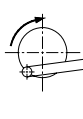					
	第 28 页	第 30 页	第 32/33 页	第 35/36 页	第 38/40 页	第 42 页
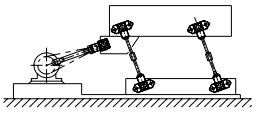	具可调轴距的 单重块振动组 *One-mass oscillating unit with adjustable axle base*	连杆头接头中 弹性铰链 *Elastic hinge in the joint of the big end of the connecting rod*			连杆头接头中 弹性铰链或弹性 存储器 *Elastic hinge in the joint of the big end of the connecting rod or elastic*	
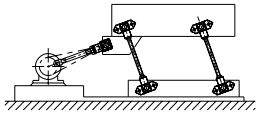	具固定轴距的 单重块振动组 *One-mass oscillating unit with fixed axle base*	连杆头接头中 弹性铰链 *Elastic hinge in the joint of the big end of the connecting rod*			连杆头接头中 弹性铰链或弹性 存储器 *Elastic hinge in the joint of the big end of the connecting rod or elastic*	
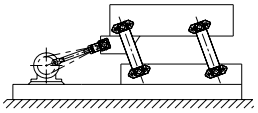	连杆头接头中 弹性铰链 *Elastic hinge in the joint of the big end of the connecting rod*	具固定轴距的 单重块振动组 *One-mass oscillating unit with fixed axle base*			连杆头接头中 弹性铰链或弹性 存储器 *Elastic hinge in the joint of the big end of the connecting rod or elastic*	
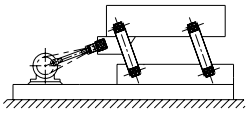	连杆头接头中 弹性铰链 *Elastic hinge in the joint of the big end of the connecting rod*	具不可调轴距的 单重块振动组 *One-mass oscillating unit with not adjustable axle base*			连杆头接头中 弹性铰链或弹性 存储器 *Elastic hinge in the joint of the big end of the connecting rod or elastic*	
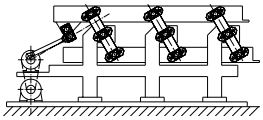	连杆头接头中 弹性铰链 *Elastic hinge in the joint of the big end of the connecting rod*		具不可调轴距的 双重块振动组 *Two-mass oscillating unit with not adjustable axle base*	连杆头接头中 弹性铰链或弹性 存储器 *Elastic hinge in the joint of the big end of the connecting rod or elastic*		
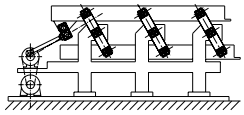	连杆头接头中 弹性铰链 *Elastic hinge in the joint of the big end of the connecting rod*		具不可调轴距的 双重块振动组 *Two-mass oscillating unit with not adjustable axle*	连杆头接头中 弹性铰链或弹性 存储器 *Elastic hinge in the joint of the big end of the connecting rod or elastic*		
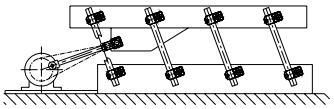	连杆头接头中 弹性铰链 *Elastic hinge in the joint of the big end of the connecting rod*			连杆头接头中 弹性铰链或弹性 存储器 *Elastic hinge in the joint of the big end of the connecting rod or elastic*	具可调轴距的 单重块振动组 *One-mass oscillating unit with adjustable axle base*	
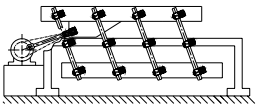	连杆头接头中 弹性铰链 *Elastic hinge in the joint of the big end of the connecting rod*			连杆头接头中 弹性铰链或弹性 存储器 *Elastic hinge in the joint of the big end of the connecting rod or elastic*	具可调轴距的 双重块振动组 *Two-mass oscillating unit with adjustable axle base*	
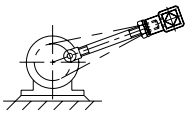	连杆头接头中 弹性铰链 *Elastic hinge in the joint of the big end of the connecting rod*					
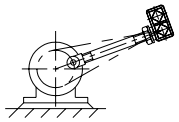					连杆头接头中 弹性铰链 *Elastic hinge in the joint of the big end of the connecting rod*	
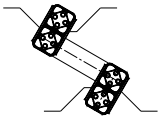					弹性存储器 *Elastic accumulator*	

VIB 弹性组件 型号: **BT-F** / *Elastic Components* ***VIB*** *Type:* ***BT-F***

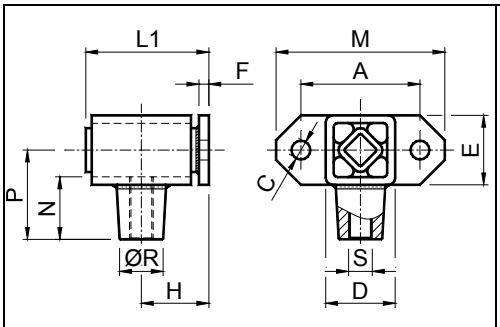

尺寸 20 和 30 / *SIZES 20 and 30*

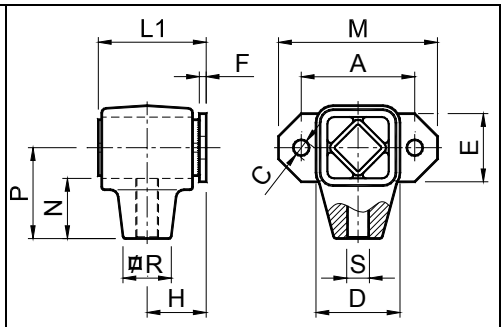

尺寸 40 和 50 / *SIZES 40 and 50*

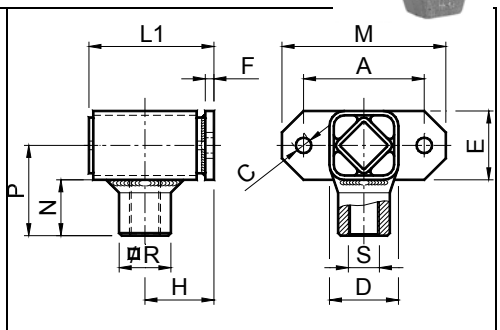

尺寸 60, 70 和 80 / *SIZES 60,70 and 80*

型号 *Type*	编号 N°	Q	n	Md	A	C	D	E	F	H	L1	M	N	P	R	S	重量 *Weight* in kg
BT-F 20	**RE020584**	96	1150	0,42	50	7	30	25	4	28	50	70	29	40	20	M10	0,28
BT-F 20 S	**RE020586**	96	1150	0,42	50	7	30	25	4	28	50	70	29	40	20	M10S	0,28
BT-F 30	**RE020588**	197	1150	1,26	60	9,5	35	35	5	34	62	85	31,5	45	22	M12	0,44
BT-F 30 S	**RE020590**	197	1150	1,26	60	9,5	35	35	5	34	62	85	31,5	45	22	M12S	0,44
BT-F 40	**RE020592**	385	750	2,5	80	11,5	54	45	5	40	73	110	40,5	60	28	M16	0,85
BT-F 40 S	**RE020594**	385	750	2,5	80	11,5	54	45	5	40	73	110	40,5	60	28	M16S	0,85
BT-F 50	**RE020596**	765	750	6,4	100	14	74	60	6	52	95	140	53	80	42	M20	2,00
BT-F 50 S	**RE020598**	765	750	6,4	100	14	74	60	6	52	95	140	53	80	42	M20S	2,00
BT-F 60	**RE020600**	1510	750	11,1	130	18	76	70	8	66	120	180	62	100	45	M24	3,20
BT-F 60 S	**RE020602**	1510	750	11,1	130	18	76	70	8	66	120	180	62	100	45	M24S	3,20
BT-F 70	**RE020604**	2370	560	19,2	140	18	80	80	10	80	145	190	65	105	60	M36	8,50
BT-F 70 S	**RE020606**	2370	560	19,2	140	18	80	80	10	80	145	190	65	105	60	M36S	8,50
BT-F 80	**RE020608**	4700	370	27,4	180	18	110	120	15	128	233	230	75	130	80	M42	20,00
BT-F 80 S	**RE020610**	4700	370	27,4	180	18	110	120	15	128	233	230	75	130	80	M42S	20,00

Q: 每个悬架最大负载 以 N 表示 / *Max loading in N per rocker suspension*

n: 偏心轮最高旋转速度 以 min^{-1} 表示 最大角度为∢10° 从位置 0 波动∢ ±5°
Max crank rotation velocity in min^{-1} at the max angle ∢10° from 0 ∢ ±5°

M_d: 动态扭矩 以 Nm/°表示 角度为∢ ±5°, 频率范围从 300 至 600 min^{-1} / *Dynamic torque in Nm/° at per ∢ ±5°, in frequency range 300-600 min^{-1}*

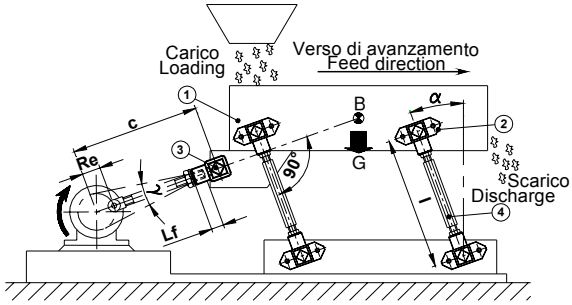

图例说明 / *Key*:

1: 滑槽 / *Sliding chute*

2: VIB BT-F 型悬架/ *BT-F suspension*

3: VIB TB 型连杆头 / *TB Drive head*

4: 连接单位 / *Connecting rod*

B: 重心 / *Center of gravity*

G: 总重量/ *Total weight*

I: 轴距 / *Distance between centers*

L_f: 螺纹段最低长度 (1.5-2 S) / *Min Screwed-in lenght (1.5-2 S)*

R_e: 曲柄半径 / *Crank radius*

α: 安装角度从 20°至 30° / *Rocker angle from 20° to 30°*

β: 工作角度 / *Working angle*

材料

尺寸为 20、30、60、70 和 80，外壳为不锈钢制； 尺寸为 40 和 50，外壳为铝制。内部方管和法兰均为钢制。

处理

外壳、内部方管和法兰均为烤炉涂漆。

使用

BT-F 振动组件主要应用于输送机和使用连杆 / 曲柄驱动的振动槽中悬架装置的设计。

MATERIALS

The external body is made of steel in the sizes 20, 30, 60, 70 and 80, light metal die cast in the sizes 40 and 50. The inner square and the fixation flange are made of steel

TREATMENTS

The external body, the inner square and the fixation flange are oven-painted.

DUTY

BT-F Oscillating component is generally used to realize rocker suspension in conveyors and oscillating screens actuacted by connecting rod/crank device.

计算实例: 使用由两个 BT-F 50 构成组的振动输送机所需的悬架装置数目的计算。

CALCULATION EXAMPLE: *Determination of the mounting number for an oscillating conveyor using BT-F 50 type.*

初始数据 / *Given data:*

M_d:	动态扭矩: *Dynamic torque*:	6.4 Nm/° (da catalogo/ *catalogue*)	G_m:	所输送物料重量: *Material weight*:	1000 N
n:	旋转速度: *Rotation velocity*:	150 min^{-1}	l:	悬架轴距长度: *Distance between centers*:	250 mm
G_g:	槽重: *Chute weight*:	5580 N	R_e:	曲柄半径: *Crank radius*:	18 mm

未知数据/ *Unknow values:*

X: 应用悬架数目 / *Number of mountings*

计算步骤 / *Calculation steps:*

E_d: 动力弹性 / *Dynamic spring value* = $\frac{M_d \cdot 360 \cdot 1000}{l^2 \cdot \pi} = \frac{6.4 \cdot 360 \cdot 1000}{250^2 \cdot \pi} = 11.74$ N/mm

总重量 G 为槽重 (G_g) 与所输送物料重量 (G_m) 的 22%的总和。

The total weight G is given by the sum of weight of the chute (G_g) plus 22% of the weight of the material to be conveyed (G_m)

G: 总重量: *Total weight:* $= G_g + \frac{G_m \cdot 22}{100} = 5580 + \frac{1000 \cdot 22}{100} = 5800$ N

E_t: 总弹性: *Total spring value:* $= \frac{G}{9810} \cdot \left(\frac{2 \cdot \pi \cdot n}{60}\right)^2 = \frac{5800}{9810} \cdot \left(\frac{\pi \cdot 150}{30}\right)^2 = 145.7$ N/mm

1) 非共振条件 / *Without resonance condition:*

X: 组件数目等于振动重体总重除以一个悬架所能允许的负载，即：
The number of the elements X is obtained by dividing the total weight of the oscillating mass by the load permitted by one mounting, so:

$= \frac{G}{Q} = \frac{5800}{765} = 7.58 \rightarrow 8$

结论: 应使用至少 8 个悬架，每件由两个 **BT-F 50** 组件组成 ➔ 16 个 **BT-F 50**.

Conclusion: *It must be used 8 mountings at least, each comprising 2 pcs **BT-F 50** elements ➔ 16 pcs **BT-F 50***

2) 共振条件下 / *With resonance condition*:

X: 悬架的总弹性 E_t 应比动力弹性大约高 10% ，即:
The total spring value E_t of the mounting must be at least 10% greater that than the dynamic spring value, so:

$= \frac{E_t}{0.9 \cdot E_d} = \frac{145.7}{0.9 \cdot 11.74} = 13.78 \rightarrow 14$

结论: 应使用 14 个悬架，每件由两个 **BT-F 50 组成** ➔ 28 个 **BT-F 50**.

Conclusion: *It must be used 14 mountings, each comprising 2 pcs **BT-F 50** elements ➔ 28 pcs **BT-F 50**.*

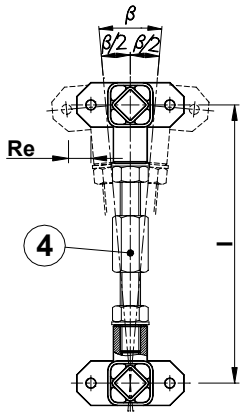

Fig 1

为使用 BT-F 组件制造悬架，我们建议参考在图 1 中所示的简图。这项系统使用一个连接单位 (4)，其首尾端具有用六角形棒车削所获取的相反的螺纹（一个右旋一个左旋）。然后给每个悬架使用活动扳手将一个 BT-F 安装至一个 BT-F S 上，这样可能校准物料滑送槽。

We recommend that you follow the diagram of figure 1 in order to make a suspension with the BT-F elements. This system focuses on the use of a link unit (4) with opposite threaded ends (right-hand and left-hand) obtained by drawing an hexagonal bar. By assembling one BT-F and one BT-F S for each suspension, with a monkey spanner you can level the chute where the material is being conveyed.

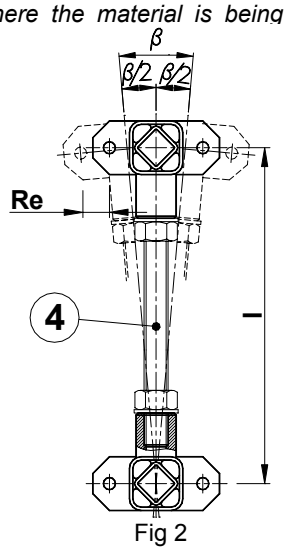

Fig 2

图 2 显示一个具不可调轴距的悬架图解。这项系统使用一个由螺纹棒制成的连接单位 (4), 在首尾端由两 个具同样螺纹（右旋或左旋）的 BT-F。一旦这个悬架在渠槽上固定，便不可再调整轴距。

Figure 2 represents the diagram of a suspension with non adjustable axle base. This system can be operated with a link unit (4) from a threaded bar with two BT-F mounted at both ends with the same thread (right-hand or left-hand). Once the suspension has been fixed to the channel, the axle base cannot be further adjusted.

VIB 弹性组件 型号: **TB** / *Elastic Components **VIB** Type: **TB***

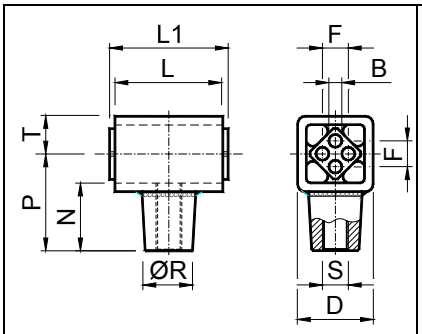

尺寸 30 / *SIZE 30*

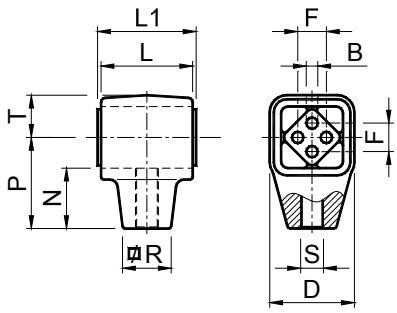

尺寸 40 和 50 / *SIZES 40 and 50*

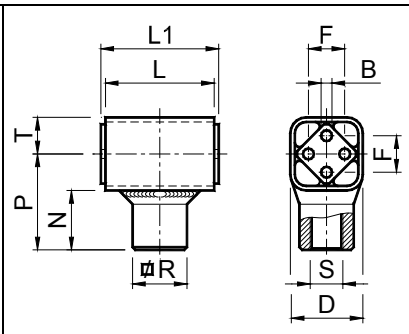

尺寸 60, 70, 80 和 100
SIZES 60, 70, 80 and 100

型号 *Type*	编号 N°	Fa max	∢γ max	n	B	D	F	L	L1	N	P	R	S	T	重量 *Weight* in kg
TB 30	**RE020768**	375	10°	1150	6 $^{+0.5}_{+0.0}$	35	12 ±0.3	50	55	31.5	45	22	M12	17.5	0,30
TB 30 S	**RE020770**	375	10°	1150	6 $^{+0.5}_{+0.0}$	35	12 ±0.3	50	55	31.5	45	22	M12 S	17.5	0,30
TB 40	**RE020772**	945	10°	1150	8 $^{+0.5}_{+0.0}$	54	20 ±0.4	60	65	40.5	60	28	M16	27	0,60
TB 40 S	**RE020774**	945	10°	1150	8 $^{+0.5}_{+0.0}$	54	20 ±0.4	60	65	40.5	60	28	M16 S	27	0,60
TB 50	**RE020776**	1930	10°	760	10 $^{+0.5}_{+0.0}$	74	25 ±0.4	80	90	53	80	42	M20	37	1,40
TB 50 S	**RE020778**	1930	10°	760	10 $^{+0.5}_{+0.0}$	74	25 ±0.4	80	90	53	80	42	M20 S	37	1,40
TB 60	**RE020780**	3350	10°	760	12 $^{+0.5}_{+0.0}$	76	35 ±0.5	100	110	62	100	45	M24	38	2,30
TB 60 S	**RE020782**	3350	10°	760	12 $^{+0.5}_{+0.0}$	76	35 ±0.5	100	110	62	100	45	M24 S	38	2,30
TB 70	**RE020784**	5720	10°	560	M12x40	80	40 ±0.5	120	130	65	105	60	M36	40	7.00
TB 70 S	**RE020786**	5720	10°	560	M12x40	80	40 ±0.5	120	130	65	105	60	M36 S	40	7.00
TB 80	**RE020788**	11350	6°	330	M16x22	110	45	200	210	75	130	80	M42	55	20.00
TB 80 S	**RE020790**	11350	6°	330	M16x22	110	45	200	210	75	130	80	M42 S	55	20.00
TB 100	**RE020796**	23000	6°	90	M20x28	136	60	300	310	92	160	100	M52	68	38.00

F_a: 最大加速力 以 N 表示 / *Max acceleration force in N*

∢γ: 振动角度 ° / *Oscillating angle in °*

n: 偏心轮最高旋转速度 以 min^{-1} 表示 最大角度为∢10° 从位置 0 波动∢ ±5°
Max crank rotation velocity in min^{-1} at the max angle ∢10° from 0 ∢ ±5°.

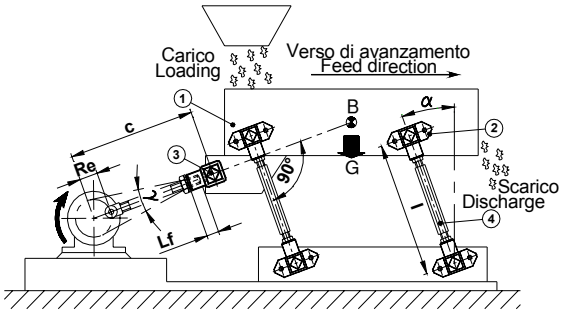

图例说明 / *Key*:

1: 滑槽 / *Sliding chute*

2: VIB BT-F 型悬架/ *BT-F suspension*

3: VIB TB 型连杆头/ *TB Drive head*

4: 连接单位 / *Connecting rod*

B: 重心 / *Center of gravity*

c: 曲柄轴距 / *Distance between centers (rod)*

G: 重量 / *Total weight*

I: 轴距 / *Distance between centers*

L_f: 螺纹段最低长度 (1.5-2 S) / *Min Screwed-in lenght (1.5-2 S)*

R_e: 曲柄半径 / *Crank radius*

α: 安装角度从 20°至 30° / *Rocker angle from 20° to 30°*

β: 工作角度 / *Working angle*

材料

尺寸为 20、30、60、70、80 和 100, 外壳为钢制；尺寸为 40 和 50, 外壳为铝制。尺寸从 20 到 70，内部方管为铝拉丝，尺寸为 80 和 100，内部方管为钢制。

处理

外壳为烤炉涂漆，内部方管为 RAL 涂漆覆盖。

应用

VIB TB 型振动组件主要应用于“连杆头”连接铰链中。与传统球形连接点相比，其弹性使得输送具更大的渐进性。

MATERIALS

The external body is made of steel in the sizes 20, 30, 60, 70, 80 and 100, light metal die cast in the sizes 40 and 50. The inner square is made of alloy profiles from size 20 to 70, steel in the sizes 80 and 100.

TREATMENTS

The external body is oven-painted while the inner square is covered with a RAL varnish.

DUTY

TB oscillating component is generally used as an elastic hinge in the joint of the big end of the connecting rod. Compared to a traditional ball joint, VIB type TB transfers the movement with a more gradualness.

计算实例: 连杆头 TB 的选择

CALCULATION EXAMPLE: *Drive head TB selection*

起始数据 / *Given data:*

n:	旋转速度: *Rotation velocity*:	150 min^{-1}	**G:**	总重量: *Total weight*:	5800 N
R_e:	曲柄半径: *Crank radius*:	18 mm	**c:**	连杆轴距: *Distance between centers (rod):*	250 mm

未知数据 / *Unknow data*:

尺寸选择 / *Size selection*

计算步骤 / *Calculation steps*:

比例 R_e/c: **=** $\frac{18}{250} = 0.072 < 0.1$ 0.1= 在此值下可获得谐波激励

Ratio R_e/c: *0.1= value under that it is possibile to achieve an harmonic excitation*

γ: $2 \cdot \arcsin\left(\frac{R_e}{c}\right) = 2 \cdot \arcsin\left(\frac{18}{250}\right) = 8.28°$

V_p: 表面速度 *Periferic velocity* $= \frac{R_e \cdot \pi \cdot n}{30} = \frac{18 \cdot \pi \cdot 150}{30} = 282.6$ mm/s

F_a: 加速力: *Acceleration force:* $= \frac{V_p^2 \cdot G}{R_e \cdot 9810} = \frac{282.6^2 \cdot 5800}{19 \cdot 9810} = 2485.13$ N

结论: 应使用一个 **TB 60 组件**

Conclusion: *It must be used one element* ***TB 60***

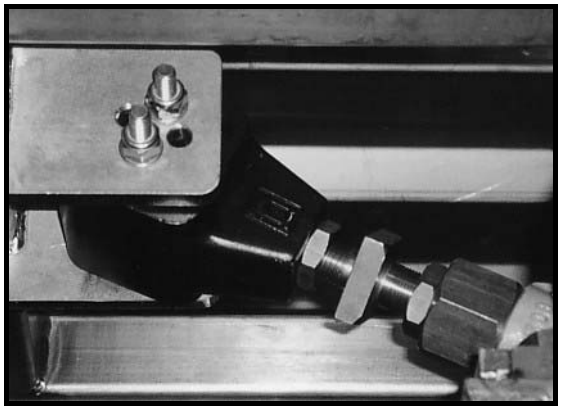

VIB 弹性组件 型号: TP-S e TP-SR / *Elastic Components VIB Type: TP-S and TP-SR*

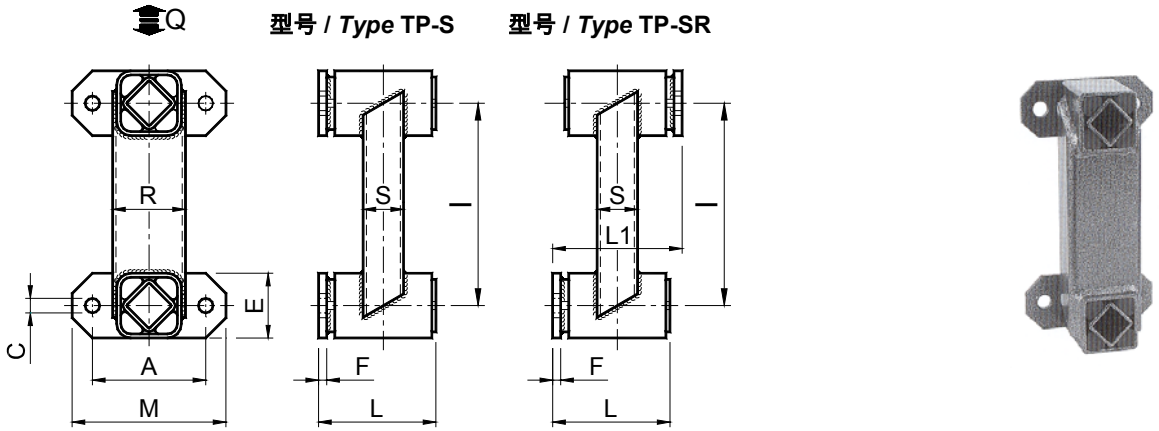

型号 *Type*	编号 N°	Q	n	D_m	E_d	A	C	E	F	I	L	L1	M	R	S	重量 *Weight* in kg	型号 *Type*	编号 N°
TP-S 20	**RE020622**	96	1150	17	4.8	50	7	25	4	100	50	56	70	35	20	0.58	**TP-SR 20**	**RE020642**
TP-S 30	**RE020624**	197	1150	21	10.0	60	9.5	35	5	120	62	68	85	40	20	0.76	**TP-SR 30**	**RE020644**
TP-S 40	**RE020626**	385	750	28	11.2	80	11.5	45	5	160	73	80	110	60	40	1.75	**TP-SR 40**	**RE020646**
TP-S 50	**RE020628**	765	750	35	18.3	100	14	60	6	200	95	104	140	70	50	3.72	**TP-SR 50**	**RE020648**
TP-S 60	**RE020630**	1510	750	35	31.8	130	18	70	8	200	120	132	180	80	40	5.57	**TP-SR 60**	**RE020650**
TP-S 70	**RE020632**	2370	560	44	35.2	140	18	80	10	250	145	160	190	90	50	8.32	**TP-SR 70**	**RE020652**

Q: 悬架最大负载 以 N 表示 / *Max loading in N per rocker suspension*

n: 偏心轮最高旋转速度 以 min^{-1} 表示 最大角度为∢10° 从位置 0 波动∢ ±5°
Max crank rotation velocity in min^{-1} at the max angle ∢10° from 0 ∢ ±5°

D_m: 最大振幅 以 mm 表示 / *Max amplitude given in mm*

E_d: 动力弹性 以 Nm/°表示 角度为∢ ±5°, 频率范围从 300 至 600 min^{-1}
Dynamic spring value in Nm/° at per ∢ ±5°, in frequency range 300-600 min^{-1}

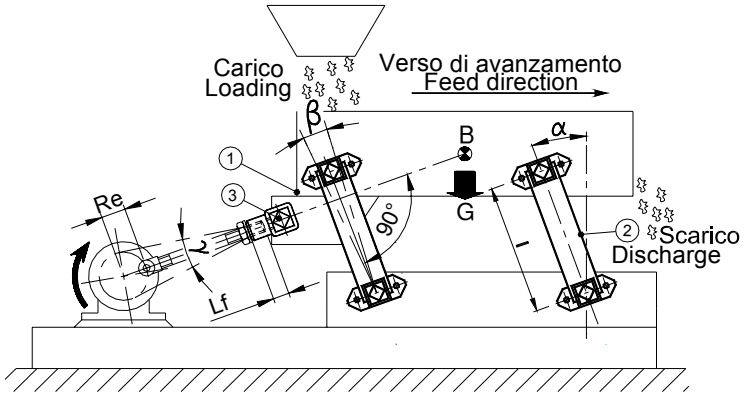

图例说明 / *Key*:

1: 滑槽 / *Sliding chute*

2: VIB TP-S 型悬架/ *BT-F suspension*

3: VIB TB 型连杆头/ *TB Drive head*

B: 重心 / *Center of gravity*

G: 重量 / *Total weight*

I: 轴距 / *Distance between centers*

L_f: 螺纹段最低长度 (1.5-2 S) / *Min Screwed-in lenght (1.5-2 S)*

R_e: 曲柄半径 / *Crank radius*

S: VIB TB 型螺纹连杆头直径 / *Threaded diameter inside type TB*

α: 安装角度从 20°至 30° / *Rocker angle from 20° to 30°*

β: 工作角度 / *Working angle*

γ: 曲柄振动角度 / *Oscillating crank angle*

材料

外部结构，内部方管和法兰均为钢制。

处理

外部结构，内部方管和法兰均为烤炉涂漆。

使用

TP-S 振动组件主要应用于使用连杆曲柄制动的输送机和振动筛中具不可变轴距的悬架。

MATERIALS

The external structure, the inner square and the fixation flange are made of steel.

TREATMENTS

The external structure, the inner square and the fixation flange are oven-painted.

DUTY

TP-S oscillating component is generally used to realize oscillating rockers with not adjustable axle base in conveyors or screens actuated by connecting a rod/crank device.

VIB 弹性组件 型号: TP-F / *Elastic Components VIB Type: TP-F*

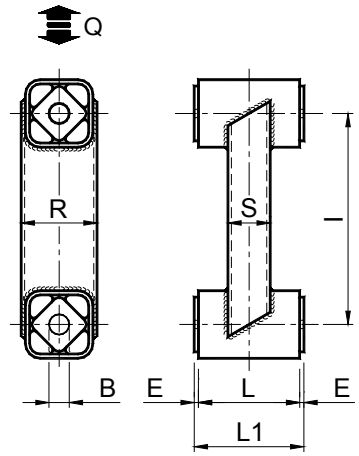

型号 *Type*	编号 N°	Q	n	Dm	Ed	B	E	I	L	L1	R	S	重量 *Weight* in kg
TP-F 20	**RE020662**	96	1150	17	4.8	10 $^{+0.40}_{+0.20}$	2.5	100	40	45	35	20	0.58
TP-F 30	**RE020664**	197	1150	21	10.0	13 $^{+0.00}_{+0.20}$	2.5	120	50	55	40	20	0.76
TP-F 40	**RE020666**	385	750	28	11.2	16 $^{+0.50}_{+0.30}$	2.5	160	60	65	60	40	1.75
TP-F 50	**RE020668**	765	750	35	18.3	20 $^{+0.50}_{+0.20}$	5	200	80	90	70	50	3.72
TP-F 60	**RE020670**	1510	750	35	31.8	24 $^{+0.50}_{+0.20}$	5	200	100	110	80	40	5.57
TP-F 70	**RE020672**	2370	560	44	35.2	30 $^{+0.50}_{+0.20}$	5	250	120	130	90	50	6.50

Q: 每个悬架的最大负载 以 N 表示 / *Max loading in N per rocker suspension*

n: 偏心轮最高旋转速度 以 min^{-1} 表示 最大角度为∢10° 从位置 0 波动∢ ±5°
Max crank rotation velocity in min^{-1} at the max angle ∢10° from 0 ∢ ±5°

D_m: 最大振幅 以 mm 表示 / *Max amplitude given in mm*

E_d: 动力弹性 以 Nm/°表示 角度为∢ ±5°, 频率范围从 300 至 600 min^{-1}
Dynamic spring value in Nm/° at per ∢ ±5°, in frequency range 300-600 min^{-1}

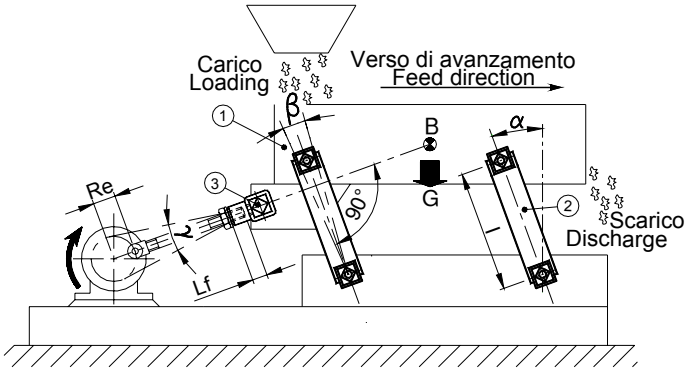

图例说明 / *Key*:

1: 滑槽 / *Sliding chute*

2: VIB TP-F 型悬架/ *BT-F suspension*

3: VIB TB 型连杆头/ *TB Drive head*

B: 重心 / *Center of gravity*

G: 总重量 / *Total weight*

I: 轴距 / *Distance between centers*

L_f: 螺纹段最低长度 (1.5-2 S) / *Min Screwed-in lenght (1.5-2 S)*

R_e: 曲柄半径 / *Crank radius*

S: VIBTB 型螺纹连杆头直径 / *Threaded diameter inside type TB*

α: 安装角度从 20°至 30° / *Rocker angle from 20° to 30°*

β: 工作角度 / *Working angle*

γ: 曲柄振动角度 / *Oscillating crank angle*

材料

外部结构为钢制，内部方管为铝制拉丝。

处理

外部结构为烤炉涂漆，内部方管由 RAL 涂漆覆盖。

使用

TP-F 振动组件主要应用于使用连杆曲柄制动的输送机和振动筛中具不可变轴距的悬架。

MATERIALS

The external structure is made of steel while the inner squares are made of light alloy profile.

TREATMENTS

The external structure is oven-painted while the inner squares are covered with a RAL varnish.

DUTY

TP-F Oscillating component is particularly used to realize suspension with not adjustable axle base or screen rockers actuated by a connecting rod/crank device.

计算实例: 振动输送机所需的悬架数目的计算，使用由 TP-S 50 或 TP-F 50 构成的组件

CALCULATION EXAMPLE: *Determination of the mounting number for an oscillating conveyor, using TP-S 50 or TP-F 50 type.*

初始数据 / *Given data*:

n:	旋转速度: *Rotation velocity*:	280 min^{-1}	**R_e:**	曲柄半径: *Crank radius*:	18 mm
G_g:	槽重: *Chute weight*:	5580 N	**E_d:**	动力弹性: *Dynamic spring value*:	18 Nmm/°
G_m:	所输送物料重量: *Material weight*:	1000 N			

未知数据 / *Unknow data*:

X: 所使用悬架的数目 / *Number of mountings*

计算步骤 / *Calculation steps*:

总重量 G 为槽重 (**G_g**) 与所输送物料重量的(**G_m**) 的 22%的总和

*The total weight G is given by the sum of weight of the chute (**G_g**) plus 22% of the weight of the material to be conveyed (**G_m**)*

G: 总重量 *Total weight*

$$= G_g + \frac{G_m \cdot 22}{100} = 5580 + \frac{1000 \cdot 22}{100} = 5800 \text{ N}$$

E_t: 总弹性 *Total spring value*

$$= \frac{G}{9810} \cdot \left(\frac{2 \cdot \pi \cdot n}{60}\right)^2 = \frac{5800}{9810} \cdot \left(\frac{\pi \cdot 280}{30}\right)^2 = 507.8 \text{ N/mm}$$

1) 在无共振条件下 / *Without resonance condition*:

X: 组件数目等于振动块总重除以一个悬架所允许的负载，即：
The number of the elements X is obtained by dividing the total weight of the oscillating mass by the load permitted by one mounting, so:

$$= \frac{G}{Q} = \frac{5800}{765} = 7.58 \rightarrow 8$$

结论： 应使用至少 8 个 **TP-S 50** 或 **TP-F 50** 组件。
Conclusion: *It must be used 8 pcs **TP-S 50** or **TP-F 50** mountings at least.*

2) 在共振条件下 / *With resonance condition*:

X: 悬架的总弹性 E_t 应接近动力弹性以上 10% ，即:
The total spring value E_t of the mounting must be at least 10% greater that than the dynamic spring value, so:

$$= \frac{E_t}{0{,}9 \cdot E_d} = \frac{507.8}{0.9 \cdot 18.3} = 30.83 \rightarrow 32$$

结论： 应使用 32 个 **TP-S 50** 或 **TP-F 50** 悬架组件。
Conclusion: *It must be used 32 pcs **TP-S 50** or **TP-F 50** mountings at least.*

VIB 弹性组件 型号: TD-S e TD-SR / *Elastic Components VIB Type: TD-S and TD-SR*

型号 / *Type TD-S*　型号 / *Type TD-SR*

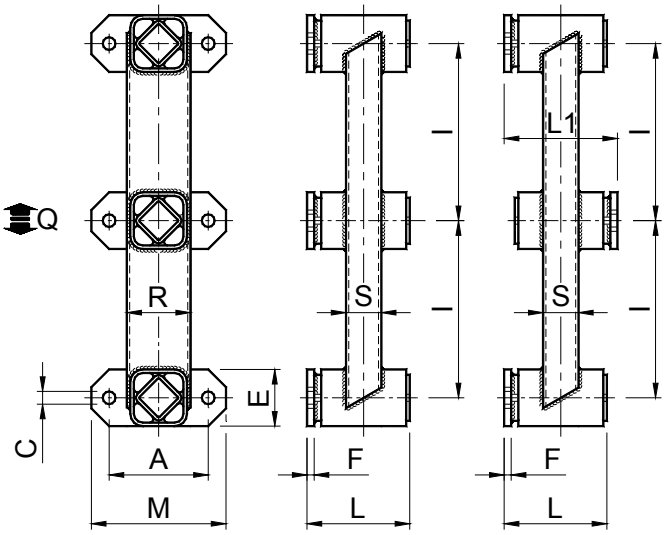

型号 *Type*	编号 N°	Q			n	Dm	Ed	A	C	E	F	I	L	L1	M	R	S	重量 *Weight* in kg	型号 *Type*	编号 N°
		J=2	J=3	J=4																
TD-S 30	**RE020684**	140	116	92	605	17	21.7	60	9.5	35	5	100	62	68	85	40	20	1.30	**TD-SR 30**	**RE020704**
TD-S 40	**RE020686**	280	232	184	555	21	29.9	80	11.5	45	5	120	73	80	110	60	40	2.60	**TD-SR 40**	**RE020706**
TD-S 50	**RE020688**	560	470	368	485	28	43.0	100	14	60	6	160	95	104	140	70	50	5.40	**TD-SR 50**	**RE020708**
TD-S 60	**RE020690**	1120	940	736	430	35	47.7	130	18	70	8	200	120	132	180	80	40	8.10	**TD-SR 60**	**RE020710**
TD-S 70	**RE020692**	1700	1430	1140	395	44	52.8	140	18	80	10	250	145	160	190	90	50	12.70	**TD-SR 70**	**RE020712**

Q: 每个悬架的最大负载 以 N 表示 / *Max loading in N per rocker suspension*

J: 振动机器指数 / *Oscillating machine factor*

n: 偏心轮最高旋转速度 以 min^{-1} 表示 最大角度为∢10° 从位置 0 波动∢ ±5°
Max crank rotation velocity in min^{-1} at the max angle ∢10° from 0 ∢ ±5°

D_m: 最大振幅 以 mm 表示 / *Max amplitude given in mm*

E_d: 动力弹性 以 Nm/°表示 角度为∢ ±5°, 频率范围从 300 至 600 min^{-1}
Dynamic spring value in Nm/° at per ∢ ±5°, in frequency range 300-600 min^{-1}

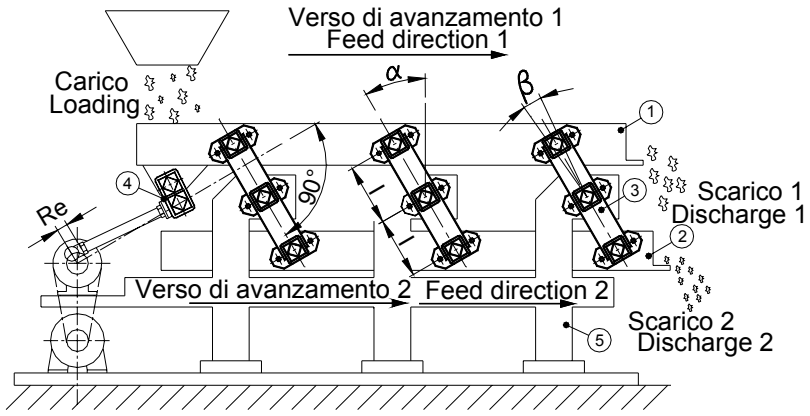

图例说明 / *Key*:

1: 上端滑槽/ *Superior sliding chute (trough)*

2: 下端平衡重块 / *Inferior counter mass*

3: VIB TD-S 型悬架 / *TD-S Suspension*

4: VIB AD-P 型振动组件 / *AD-P Oscillating Component*

5: 底盘 / *Base plate*

α: 安装角度从 20°至 30° / *Rocker angle from 20° to 30°*

β: 工作角度 / *Working angle*

I: 轴距 / *Distance between centers*

材料

外部结构、内部方管和法兰均为钢制。

处理

外部结构、内部方管和法兰均为烤炉涂漆。

使用

TP-S 振动组件主要应用于使用连杆曲柄制动的具重量块和平衡重块的输送机和振动筛中具不可变轴距的弹性悬架。

MATERIALS

The external structure, the inner squares and the fixation flange are oven-painted.

TREATMENTS

The external structure, the inner squares and the fixation flanges are made of steel.

DUTY

TD-S Oscillating component is generally use to realize rocker suspension for conveyors or screens with two-mass (trough – counter mass) actuated by a connecting rod/crank device.

VIB 弹性组件 型号: TD-F / *Elastic Components VIB Type: TD-F*

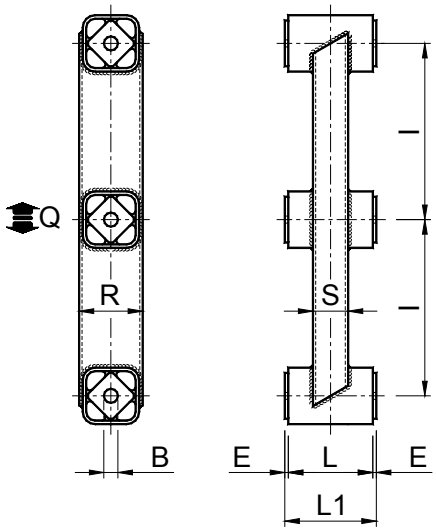

型号 *Type*	编号 N°	Q			n	Dm	Ed	B	E	I	L	L1	R	S	重量 *Weight* in kg
		J=2	J=3	J=4											
TD-F 30	**RE020724**	140	116	92	605	17	21.7	12.5 $^{+0.20}_{+0.00}$	2.5	100	50	55	40	20	0.88
TD-F 40	**RE020726**	280	232	184	555	21	29.9	16 $^{+0.25}_{+0.00}$	2.5	120	60	65	60	40	1.95
TD-F 50	**RE020728**	560	470	368	485	28	43.0	20 $^{+0.25}_{+0.00}$	5	160	80	90	70	50	4.02
TD-F 60	**RE020730**	1120	940	736	430	35	47.7	24 $^{+0.25}_{+0.00}$	5	200	100	110	80	40	6.52

Q: 每个悬架最大负载 以 N 表示/ *Max loading in N per suspension*

J: 振动机器指数 / *Oscillating machine factor*

n: 偏心轮最高旋转速度 以 min^{-1} 表示 最大角度为∢10° 从位置 0 波动∢ ±5°
Max crank rotation velocity in min^{-1} at the max angle ∢10° from 0 ∢ ±5°

D_m: 最大振幅 以 mm 表示 / *Max amplitude given in mm*

E_d: 动力弹性 以 Nm/°表示 角度为∢ ±5°, 频率范围从 300 至 600 min^{-1}
Dynamic spring value in Nm/° at per ∢ ±5°, in frequency range 300-600 min^{-1}

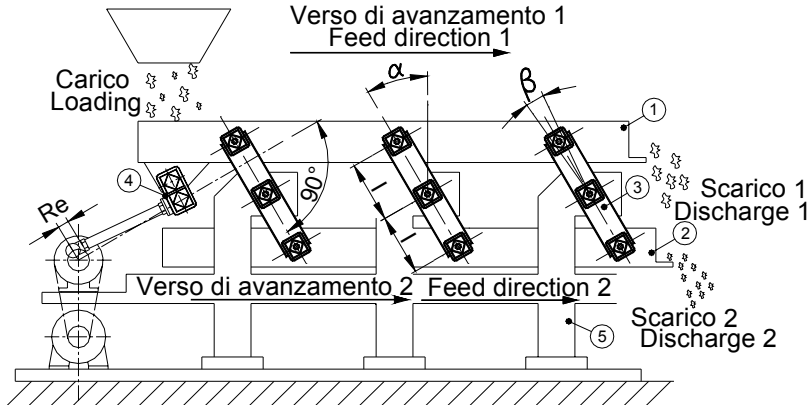

图例说明 / *Key*:

1: 上端滑槽/ *Superior sliding chute (trough)*

2: 下端平衡重块/ *Inferior counter mass*

3: VIB TD-F 型悬架 / *TD-S Suspension*

4: VIB AD-P 型振动组件 / *AD-P Oscillating Component*

5: 底盘 / *Base plate*

α: 安装角度从 20°至 30° / *Rocker angle from 20° to 30°*

β: 工作角度 / *Working angle*

I: 轴距 / *Distance between centers*

材料

外部结构为钢制，内部方管为铝制拉丝。

处理

外部结构为烤炉涂漆，内部方管由 RAL 涂漆覆盖。

使用

TP-P 振动组件主要应用于使用连杆曲柄制动的具重量块和平衡重块的输送机和振动筛中具不可变轴距的弹性悬架。

MATERIALS

The external structure is made of steel while the inner squares are made of light alloy profile.

TREATMENTS

The external structure is oven-painted, while the inner squares are covered with a RAL varnish.

DUTY

TD-F Oscillating component is generally use to realize rocker suspensions for conveyors or screens with two-mass (trough – counter mass) actuated by a connecting rod/crank device.

计算实例: 振动输送机所需的悬架数目的计算，使用由 TD-S 40 或 TD-F 40 构成的组件。

CALCULATION EXAMPLE: *Determination of the mounting number for an oscillating conveyor using TD-S 40 or TD-F 40 type*

起始数据 / *Given data:*

n:	旋转速度: *Rotation velocity*:	385 min^{-1}	**R_e:**	曲柄半径: *Crank radius*:	18 mm
G_g:	槽重: *Chute weight*:	1734 N	**E_d:**	动力弹性: *Dynamic spring value*:	29.9 Nmm/°
G_m:	所输送物料重量: *Material weight*:	300 N			

未知数据 / *Unknow data*:

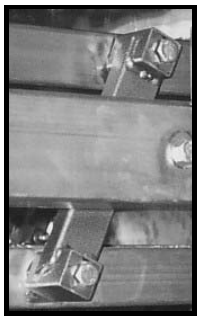

X: 应使用的悬架数目 / *Number of mountings*

计算步骤 / *Calculation steps*:

J: 振动机器指数 / *Oscillating machine factor*

$$= \frac{\left(\frac{2\cdot\pi\cdot n}{60}\right)^2\cdot Re}{9810} = \frac{\left(\frac{\pi\cdot 385}{30}\right)^2\cdot 18}{9810} = 3.0$$

总重量 G 为槽重 (G_g) 与所输送物料重量的(G_m) 的 22%的总和

The total weight G is given by the sum of weight of the chute (G_g) plus 22% of the weight of the material to be conveyed (G_m)

G: 总重量 / *Total weight*

$$= G_g + \frac{G_m\cdot 22}{100} = 1734 + \frac{1000\cdot 22}{100} = 1800\ N$$

E_t: 总弹性 / *Total spring value*

$$= \frac{G}{9810}\cdot\left(\frac{2\cdot\pi\cdot n}{60}\right)^2 = \frac{1800}{9810}\cdot\left(\frac{\pi\cdot 385}{30}\right)^2 = 298\ N/mm$$

1) 在无共振条件下 / *Without resonance condition*:

X: 组件数目等于振动块总重除以一个悬架所允许的负载，即：
The number of the elements X is obtained by dividing the total weight of the oscillating mass by the load permitted by one mounting, so:

$$= \frac{G}{Q} = \frac{1800}{280} = 6.43 \rightarrow 8$$

结论: 应使用至少 8 个 **TD-S 40** 或 **TD-F 40** 悬架组件。

Conclusion: *It must be used 8 pcs **TD-S 40** or **TD-F 40** mountings at least.*

2) 在共振条件下 / *With resonance condition*:

X: 悬架的总弹性 E_t 应大约为动力弹性以上 10% ，即:
The total spring value E_t of the mounting must be at least 10% greater that than the dynamic spring value, so:

$$= \frac{E_t}{0.9\cdot E_d} = \frac{298}{0.9\cdot 29.9} = 11.07 \rightarrow 12$$

结论: 应使用 12 个 **TD-S 40** 或 **TD-F 40** 悬架组件。

Conclusion: *It must be used 12 pcs **TD-S 40** or **TD-F 40** mountings at least.*

VIB 弹性组件 型号: AD-P (具连杆头功能)

*Elastic Components **VIB** Type: **AD-P (as Drive Head)***

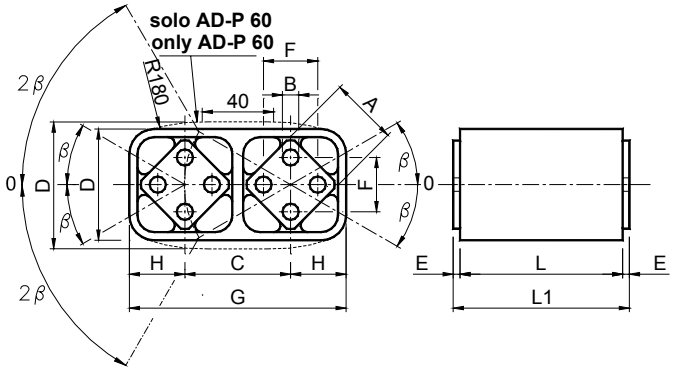

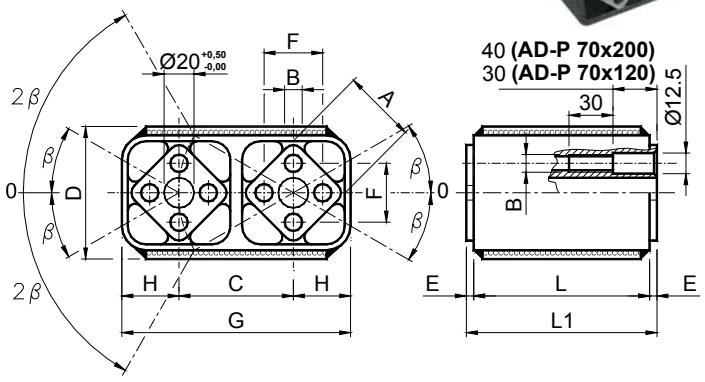

尺寸 **40** */ SIZE 40*

尺寸 50, 60 和 70 / SIZES 50, 60 and 70

型号 *Type*	编号 N°	Ed	A	B	C	D	E	F	G	H	L	L1 +0.0 -0.3	重量 *Weight* in kg
AD-P 40 x 60	**RE020326**	154	27	8 +0.5 +0.0	44	47 ±0.15	2.5	20 ±0.4	91 +0.2 +0.0	22.5	60	65	0,47
AD-P 50 x 80	**RE020331**	202	38	10 +0.5 +0.0	60	63 ±0.2	2.5	25 ±0.4	123 +0.3 +0.0	30	80	90	1,15
AD-P 60 x 80	**RE020335**	212	45	12 +0.5 +0.0	73	85 ±0.2	5	35 ±0.5	149.4 +1.6 -0.4	36	80	90	2,00
AD-P 60 x 100	**RE020336**	250	45	12 +0.5 +0.0	73	85 ±0.2	5	35 ±0.5	149.4 +1.6 -0.4	36	100	110	2,21
AD-P 70 x 120	**RE020340**	384	50	M12	78	90 ±0.2	5	40 ±0.5	156 +0.4 +0.0	39	120	130	5.95
AD-P 70 x 200	**RE020341**	576	50	M12	78	90 ±0.2	5	40 ±0.5	156 +0.4 +0.0	39	200	210	9.82

E_d: 动力弹性 以 Nm/°表示 角度为≮ ±5°, 频率范围从 300 至 600 min^{-1}

Dynamic spring value in Nm/° at per ≮ ±5°, in frequency range 300-600 min^{-1}

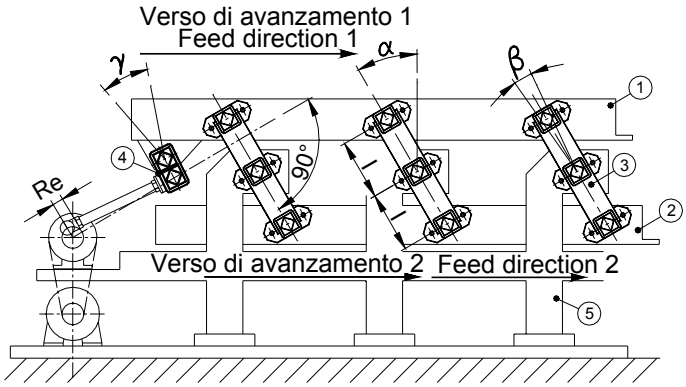

图例说明 / *Key*:

1: 上端滑槽/ *Superior sliding chute (trough)*

2: 下端平衡重块 / *Inferior counter mass*

3: VIB TD-S 型悬架 / *TD-S Suspension*

4: VIB AD-P 型振动组件 / *AD-P Oscillating Component*

5: 底盘 / *Base plate*

α: 安装角度从 20°至 30° / *Rocker angle from 20° to 30°*

β: 工作角度 / *Working angle*

l: 轴距 / *Distance between centers*

材料

尺寸从 40 到 60， 外壳和内部方管为铝制拉丝。尺寸为 70, 外壳为钢制，内部方管为铝制拉丝 。

处理

外壳为烤炉涂漆，内部方管为 RAL 涂漆覆盖。

应用

具振动弹性连杆头功能的 **AD-P** 振动组件主要如同使用弹性铰链一样将振动传输至振动槽。 这个具有连杆头功能的振动组件 **AD-P** 仅在共振条件下用于振动输送机中。

曲柄的最高总振动角度应为 γ<10°从位置 0 的波动≮±5°。

MATERIALS

From size 40 to 60 external boy and inner square are made out of light alloy profile. For size 70 the external body is made of steel while the inner squares are made of alloy profiles.

TREATMENTS

The external body is oven-painted while the inner tube is covered with a RAL varnish.

DUTY

AD-P Oscillating component as drive head can be used only in oscillating conveyor as elastic hinge to transfer the movement in oscillating trough.

AD-P Oscillating component as drive head can be used only in shaker conveyors with resonance condition.

The maximum angle of the total oscillating angle must not exceed γ<10° *from 0 ≮ ±5°*

计算实例: AD-P 连杆头的选择

CALCULATION EXAMPLE: *Drive head AD-P selection*

起始数据 / *Given data*:

n:	旋转速度: *Rotation velocity*:	385 min^{-1}	**G_g:**	槽重: *Chute weight*:	1734 N
R_e:	曲柄半径: *Crank radius*:	18 mm	**G_m:**	所输送物料重量: *Weight material*:	300 N

未知数据 / *Unknow data*:

尺寸的选择 / *Size selection*

计算步骤 / *Calculation steps*:

J: 振动机器指数 *Oscillating machine factor*

$$= \frac{\left(\frac{2 \cdot \pi \cdot n}{60}\right)^2 \cdot Re}{9810} = \frac{\left(\frac{\pi \cdot 385}{30}\right)^2 \cdot 18}{9810} = 3.0$$

总重量 G 为槽重 (**G_g**) 与所输送物料重量的(**G_m**) 的 22%的总和

*The total weight G is given by the sum of weight of the chute (**G_g**) plus 22% of the weight of the material to be conveyed (**G_m**)*

G: 总重量 *Total weight*

$$= G_g + \frac{G_m \cdot 22}{100} = 1734 + \frac{1000 \cdot 22}{100} = 1800 \text{ N}$$

E_t: 总弹性 *Total spring value*

$$= \frac{G}{9810} \cdot \left(\frac{2 \cdot \pi \cdot n}{60}\right)^2 = \frac{1800}{9810} \cdot \left(\frac{\pi \cdot 385}{30}\right)^2 = 298 \text{ N/mm}$$

结论: 应使用一个 **AD-P 70x120 组件**

Conclusion: *It must be used one piece **AD-P 70x120***

VIB 弹性组件 型号: AD-P (具弹性存储器功能)

*Elastic Components **VIB** Type: **AD-P (Elastic spring accumulator)***

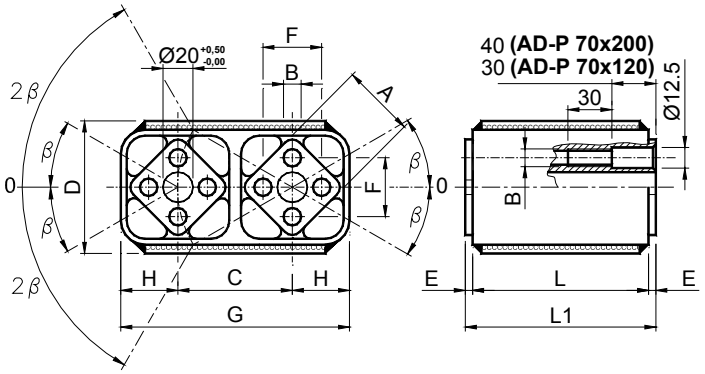

型号 *Type* Typ	编号 N°	Ed	A	B	C	D	E	F	G	H	L	L1 +0,0 -0,3	重量 *Weight* in kg
AD-P 60 x 80	**RE020335**	212	45	12 +0.5 +0.0	73	85 ±0.2	5	35 ±0.5	149.4 +1.6 -0.4	36	80	90	2.00
AD-P 60 x 100	**RE020336**	250	45	12 +0.5 +0.0	73	85 ±0.2	5	35 ±0.5	149.4 +1.6 -0.4	36	100	110	2.21
AD-P 70 x 120	**RE020340**	384	50	M12	78	90 ±0.2	5	40 ±0.5	156 +0.4 +0.0	39	120	130	5.95
AD-P 70 x 200	**RE020341**	576	50	M12	78	90 ±0.2	5	40 ±0.5	156 +0.4 +0.0	39	200	210	9.82

材料 / MATERIALS

尺寸为 60，外壳和内部方管为铝制拉丝。尺寸为 70, 外壳为钢制， 内部方管为铝制拉丝 。Size 60 external body and inner square are made out of light alloy profile. Size 70: external body is made of steel while inner square is made out of light alloy profile.

处理/ TREATMENTS

外壳为烤炉涂漆，内部方管为 RAL 涂漆覆盖。 / *The external body is oven-painted while the inner tube is covered with a RAL varnish.*

应用/ DUTY

弹性存储器由两个 **AD-P** 弹性组件组成，它们之间由连接单位连接（我们不提供连接单位）/ *The elastic spring accumulator consists of two elastic components AD-P with a connection link (this is not supplied by us).*

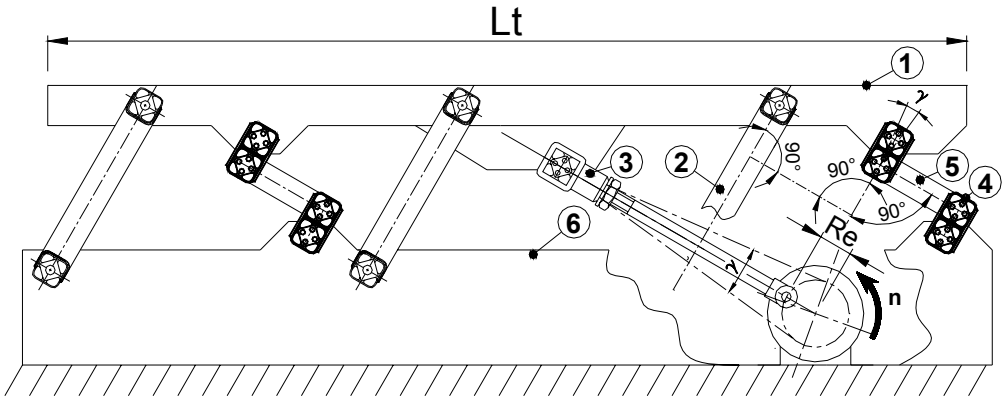

图例说明:

1: 滑槽
Sliding chute (Troughs)

2: 弹性悬架
Elastic suspension

3: VIB TB 型 / *VIB Type TB*

4: VIB AD-P 型 具存储器功能 (两件)
VIB type AD-P as elastic accumulator (2 pieces)

5: 连接单位
Connecting link

6: 底盘 / *Base plate*

R_e: 曲轴半径
Crank radius

由两个组件组成的弹性存储器: *Elastic accumulator composed of two elements:*	$E_d/2$ [N/mm]	总振动角度 γ [°] *Total oscillating angle γ [°]*	R_e [mm]	n [min^{-1}]
2•AD-P 60x80	106	10° (±5°) 8° (±4°) 6° (±3°)	12.5 10.0 7.5	500 750 1230
2•AD-P 60x100	125	10° (±5°) 8° (±4°) 6° (±3°)	12.5 10.0 7.5	460 690 1150
2•AD-P 70x120	192	10° (±5°) 8° (±4°) 6° (±3°)	27.2 21.8 16.4	400 575 920
2•AD-P 70x200	288	10° (±5°) 8° (±4°) 6° (±3°)	27.2 21.8 16.4	365 520 825

弹性存储器仅可应用于接近共振的条件，它们具有减低所用驱动功率和减弱对结构的应力的功能。因此，这些弹性存储器可用于减低在共振条件下所使用的弹性悬架的数目。

弹性存储器有助于将每个 **VIB AD-P** 型动力弹性减半。由于其"系列性"的安装，弹性存储器比单一组件的动力弹性减半 ($E_d/2$)。

The only condition in which elastic accumulators can be used is a near-resonance state in order to reduce the actuator power and damp structural stresses.
Elastic accumulators are used to reduce the number of elastic suspensions requested under resonance conditions.
The elastic accumulators allow to reduce the dynamic elasticity of each VIB AD-P type in half. Given its standard assembly, the elastic damper defines the value of half dynamic elasticity ($E_d/2$) versus each element.

计算实例: AD-P 弹性存储器的选择

CALCULATION EXAMPLE: *AD-P Elastic accumulator selection*

起始数据 / *Given data*:

L_t:	输送机长度: *Conveyor lenght:*:	8 m	**G_g:**	槽重: *Chute weight:*:	3000 N
X:	悬架数目: *Number of mountings*:	6 (3 per lato / *per side*)	**G_m:**	所输送物料重量: *Material weight:*	500 N
n:	旋转速度: *Rotation velocity:*	345 min^{-1}	**R_e:**	曲柄半径: *Crank radius*:	7.5 mm

未知数据 / *Unknow data*:

Q_0: 每个悬架上的负载
Load on per suspensions

E_{tot}: 由所有弹性组件所提供的总动力弹性
Dynamic spring value given by all the elastic components

E_{d2}: 由弹性存储器所提供的总动力弹性
Dynamic spring value given by the elastic accumulators

E_{d1}: 由悬架所提供的总动力弹性
Elastic spring value given by the suspensions

S: 动力弹性储备
Dynamic spring reserve value

计算步骤 / *Calculation steps*:

J: 振动机器指数
Oscillating machine factor

$$= \frac{\left(\frac{2\cdot\pi\cdot n}{60}\right)^2\cdot Re}{9810} = \frac{\left(\frac{\pi\cdot 345}{30}\right)^2\cdot 7{,}5}{9810} = 1{,}0$$

总重量 G 为槽重 (**G_g**) 与所输送物料重量的(**G_m**) 的 22%的总和
*The total weight G is given by the sum of weight of the chute (**G_g**) plus 22% of the weight of the material to be conveyed (**G_m**)*

G: 总重量
Total weight

$$= G_g + \frac{G_m\cdot 22}{100} = 3000 + \frac{500\cdot 22}{100} = 3110\ N$$

E_t: 总弹性
Total spring value

$$= \frac{G}{9810}\cdot\left(\frac{2\cdot\pi\cdot n}{60}\right)^2 = \frac{3110}{9810}\cdot\left(\frac{\pi\cdot 345}{30}\right)^2 = 413.4\ N/mm$$

Q_0: 组件的选择由总重 G 除以悬架的数目 X, quindi:
The element selection is obtained by dividing the total weight G by the suspensions number, so:

$$= \frac{G}{X} = \frac{3110}{6} = 518.3\ N$$

➔ 应使用六个 **TP-F 50** 型悬架，可提供总动力弹性 **E_{d1}** = 18.3·6 = 109.8 N/mm

➔ *It must be used 6 pcs **TP-F 50** mountings that give a total dynamic spring value **E_{d1}** = 18,3·6 = 109,8 N/mm*

E_{d2}: 我们可使用 3 个弹性存储器，每个由 2 个 **AD-P 60x80** 弹性组件组成，这两个弹性组件提供总动力弹性：
We can use 3 pieces of spring elastic accumulator, each consisting of 2 elastic components AD-P 60x80 that give a total dynamic spring value:

= 106·3 = 318 N/mm

E_{tot} = E_{d1} + E_{d2} = 109.8 + 318 = 427.8 N/mm

S = E_{tot} – E_t = 427.8 – 413.4 = 14.4 N/mm (3.5 %)

振动系统仍保留 3.5%的弹性可用于可能的超载。

The oscillating system has still 3,5 % of elastic spring value that can be used as reserve for a possible overloading.

VIB 弹性组件 型号: GF / *Elastic Components VIB Type: GF*

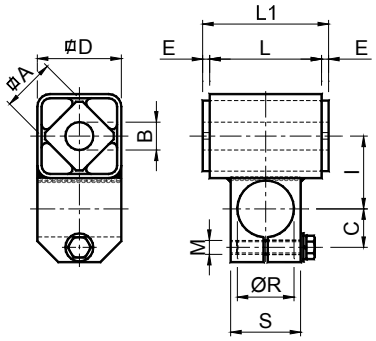

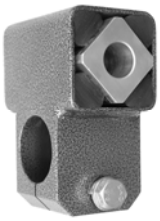

型号 *Type*	编号 N°	Q			n	Md	A	B	C	D	E	I	L	L1	M	R	S	重量 *Weight* in kg
		J=2	J=3	J=4														
GF 40	**RE021076**	280	230	190	570	2.5	27	16	21.5	45	2.5	39	60	65	M10	30	40	0.90
GF 50	**RE021078**	580	480	380	490	6.4	38	20	26.5	60	5	52	80	90	M10	40	50	1.40

Q: 每个悬架最大负载 以 N 表示/ *Max loading in N per suspension*

J: 振动机器指数/ *Oscillating machine factor*

n: 偏心轮最高旋转速度 以 min^{-1} 表示 最大角度为∢10° 从位置 0 波动∢ ±5°
Max crank rotation velocity in min^{-1} at the max angle ∢10° from 0 ∢ ±5°

D_m: 最大振幅 以 mm 表示 / *Max amplitude in mm*

E_d: 动力弹性 以 Nm/°表示 角度为∢ ±5°, 频率范围从 300 至 600 min^{-1}
Dynamic spring value in Nm/° at per ∢ ±5°, in frequency range 300-600 min^{-1}

材料 / MATERIALS

外部结构为钢制，内部方管为铝制拉丝。/ *The external body is made of steel while the inner square is made of light alloy profile.*

处理 / *TREATMENTS*

外部结构为烤炉涂漆，内部方管由 RAL 涂漆覆盖 / *The external body is oven-painted while the inner square is covered with a RAL varnish.*

使用 / DUTY

GF 振动组件主要应用于以连杆 / 曲柄制动的输送机和振动筛中具不可变轴距的弹性悬架。使用 GF 组件可为具单重块的系统或者具单重块和平衡重块的系统制造可变轴距的悬架。连接单位使用圆管，其费用由用户负担。

Oscillating components GF are generally used to realize rocker suspension in conveyor and screens actuated by a connecting rod/crank device. With GF components it is possible realize rocker suspension with adjustable axle base in one mass system or two mass system (with counter mass). The customer supplies the round connecting link that is realize with a round section tube.

应用 1 / *Application 1*:

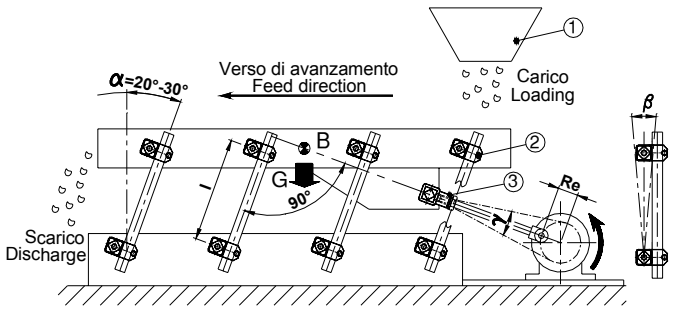

图例说明:

1: 装料漏斗 / *Load hopper*

2: VIB GF 型弹性组件 / *GF Elastic component*

3: VIB TB 型弹性组件 / *TB Elastic Component*

B: 重心 / *Centre of gravity*

G: 重量 / *Weight* R_e: 曲柄半径 / *Crank radius*

α: 安装角度从 20°至 30° / *Rocker angle from 20° to 30°*

β: 工作角度 / *Working angle* γ: 曲柄振动角度 / *Oscillating crank angle*

I: 轴距 / *Distance between centers*

一个具单重块的振动组实例。

所用的计算步骤与在相关于 BT-F 段落中所描述的一致。

由两个 GF 弹性组件所组成的每个悬架的动力弹性 E_d 由以下关系式得到:

E_d: 动力弹性 = $\frac{M_d \cdot 360 \cdot 1000}{I^2 \cdot \pi}$ [N/mm]

EXAMPLE OF A ONE-MASS VIBRATING UNIT.
The calculation diagram you should follow is as described in the BT-F paragraph.

Dynamic elasticity E_d for each suspension consisting of two elastic components GF is obtained from the relation:

***E_d:** Dynamic elasticity = $\frac{M_d \cdot 360 \cdot 1000}{I^2 \cdot \pi}$ [N/mm]*

应用 2 / *Application 2*:

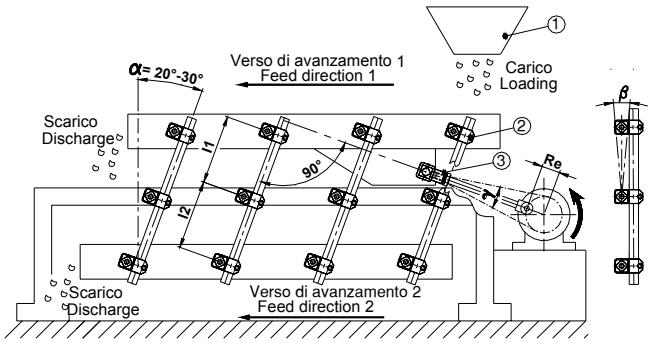

图例说明 / *Key*:

1: 装料漏斗 / *Load hopper*

2: VIB GF 型弹性组件 / *GF Elastic component*

3: VIB TB 型弹性组件 / *TB Elastic Component*

R_e: 曲柄半径 / *Crank radius*

α: 安装角度从 20°至 30° / *Rocker angle from 20° to 30°*

β: 工作角度 / *Working angle*

γ: 曲柄振动角度 / *Oscillating crank angle*

I_1: 上端渠轴距 / *Superior chute distance between centers*

I_2: 下端渠轴距 / *Inferior chute distance between centers*

连接单位 (费用由用户负担)：推荐尺寸
CONNECTING LINK (to be supplied by the customer): RECOMMENDED DIMENSIONS

型号 *Type*	ØT	M_S	I_M	应用 *DUTY*
GF 40	30	3	160	仅适用于应用 1 - *Only application 1*
GF 40	30	4	220	应用 1 / 2 / 3 - *Application 1/2/3*
GF 40	30	3	300	应用 1 / 2 / 3 - *Application 1/2/3*
GF 50	40	3	200	仅适用于应用 1 - *Only application 1*
GF 50	40	4	250	应用 1 / 2 / 3 - *Application 1/2/3*
GF 50	40	5	300	应用 1 / 2 / 3 - *Application 1/2/3*

ØT: 连接管直径 / *Connecting tube diameter*

M_S: 管最低厚度 / *Minimum thickness*

I_M: 最大轴距 / *Maximum distance between centers*

应用 3 / *Application 3*:

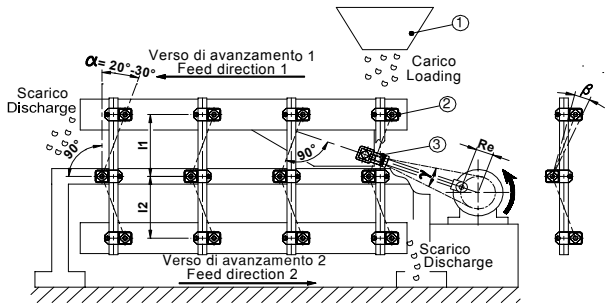

图例说明 / *Key*:

1: 装料漏斗 / *Load hopper*

2: VIB GF 型弹性组件 / *GF Elastic component*

3: VIB TB 型弹性组件 / *TB Elastic Component*

R_e: Raggio della manovella / *Crank radius*

R_e: 曲柄半径 / *Crank radius*

α: 安装角度从 20°至 30° / *Rocker angle from 20° to 30°*

β: 最大工作角度 10° / *Working angle*

γ: 曲柄振动角度 / *Oscillating crank angle*

I_1: 上端渠轴距 / *Superior chute distance between centers*

I_2: 下端渠轴距 / *Inferior chute distance between centers*

具两份平衡重块的振动组实例（在渠槽上前进方向相同）。

所用的计算步骤与在相关于 TD-F 段落中所描述的一致。

由三个 GF 弹性组件所组成的每个悬架的动力弹性 E_d 由以下关系式得到:**E_d:** 动力弹性 = $\frac{270 \cdot M_d \cdot 1000}{\pi}\left(\frac{I_1^2+I_2^2}{I_1^2 \cdot I_2^2}\right)$ [N/mm]

使用这项系统可能设计双重平衡振动槽。下端槽可用于将系统输送容量加倍，也可用于收集从上端槽落下的物料（筛子、校准器、除尘器等）。由上端渠槽输送的物料及由下端渠槽输送的物料的前进方向一致。

EXAMPLE OF A TWO-BALANCED-MASS VIBRATING UNIT (same feed directions on the channels).

The calculation diagram you should follow is as described in the TD-F paragrap.
Dynamic elasticity E_d for each suspension consisting of three elastic components GF is obtained from the relation:

***E_d:** Dynamic elasticity = $\frac{270 \cdot M_d \cdot 1000}{\pi}\left(\frac{I_1^2+I_2^2}{I_1^2 \cdot I_2^2}\right)$ [N/mm]*

The above system can be used to make double balanced vibrating channels. The lower channel may be used to double the system conveyance capacity as well as to collect the material falling from the upper channel (sieves, calibrators, dusters, etc.). The feed direction of the material carried by the upper and lower channel is the same.

具两份平衡重块的振动组实例（在渠槽上前进方向相反）。

所用的计算步骤与在相关于 TD-F 段落中所描述的一致。

由三个 GF 弹性组件所组成的每个悬架的动力弹性 E_d 由以下关系式得到:**E_d:** 动力弹性 = $\frac{270 \cdot M_d \cdot 1000}{\pi}\left(\frac{I_1^2+I_2^2}{I_1^2 \cdot I_2^2}\right)$ [N/mm]

使用这项系统可能设计双重平衡振动槽。上端槽和下端槽物料的前进方向相反。下端槽可用于将系统输送容量加倍，也可用于收集从上端槽落下的物料（筛子、校准器、除尘器等），并将其重新传送至装置起始端。为了获得在两个渠槽上相反的前进方向，悬架应与渠槽垂直安置，上端和下端 GF 弹性组件与在框架上固定的中央组件成 180°。

EXAMPLE OF A TWO-BALANCED-MASS VIBRATING UNIT (opposite feed directions on the channels).

The calculation diagram you should follow is as described in the TD-F paragraph.
Dynamic elasticity E_d for each suspension consisting of three elastic components GF is obtained from the relation:

***E_d:** Dynamic elasticity = $\frac{270 \cdot M_d \cdot 1000}{\pi}\left(\frac{I_1^2+I_2^2}{I_1^2 \cdot I_2^2}\right)$ [N/mm]*

The above system can be used to make double balanced vibrating channels. The lower channel may be used to double the system conveyance capacity with opposite feed directions of the upper and lower channels as well as to collect the material falling from the upper channel (sieves, calibrators, dusters, etc.) in order to bring it to the starting point of the plant. The two channels opposite feed directions can be obtained by positioning suspensions perpendicular to the channels and by rotating of 180° the upper and lower GF elastic components with respect to the central component which is fixed to the structure.

具振动电机驱动或偏心块驱动的输送机
MOTOR CONVEYORS: VIBRATING MOTOR OR ECCENTRIC MASS

VIB 产品技术可用于设计由“内装的”旋转偏心块(如振动电机)驱动的振动槽的弹性悬架。为了制造可能有规律地在整个平面输送物料的振动输送机，振动槽应尽可能地坚硬，若有必要，在驱动力行使方向有横纹。所使应力一般在与前进平面成 45°/60°之间，由两个同步旋转偏心块产生。事实上，一台振动电机可提供在 360°内任何方向的振动力 (图 1), 两台具相反旋转方向的同步振动电机，由于两台电机的垂直安装方向，提供一份独一的和谐振动（图 2）。另外所受激发力的垂直线应落在渠槽的重心点。为不造成过分的不平衡，重块的旋转速度应处于 750 和 3000 转/分之间。使用 VIB 技术设计的弹性组件，由于天然橡胶内置物，使得在整个振动平面产生和谐振动，避免振动在装备固定结构中扩散。由于在 VIB 振动组件之间没有金属部分的接触，可隔离可能在物料输送过程由于摩擦所产生的静电电荷。

VIB technology can be applied to produce elastic suspensions for vibrating channels actuated by “on board” eccentric rotating masses (example: motor vibrators). In order to produce an oscillating conveyor in which vibrations uniformly carry the material along the entire plane, the vibrating channel must be as stiff as possible and, if necessary, with ribs pointing to the direction of application of the actuation force. The application of the excitation force is generally ranging from 45° to 60° compared to the feed plane and is the result of two eccentric masses rotating synchronously. One motor vibrator is enough to supply and spread vibration forces in all directions at 360° (fig. 1) while two timed motor vibrators with opposite rotation direction produce one harmonic vibration only, whose direction is perpendicular to the application plane of the two motors (fig. 2). The straight line of the excitation force must fall in the centre of gravity of the channel. The rotation velocities of the masses must range from 750 and 3000 rounds/min in order to avoid any excessive unbalances. Elastic suspensions obtained with VIB technology, given their inserts of natural rubber, generate harmonic vibrations all along the vibrating plane yet avoiding their propagation to the fix structure of the plant. Because VIB oscillating elements have no metal parts in contact with each other, they can insulate from electrostatic charges, which may be induced by friction while the material is being conveyed.

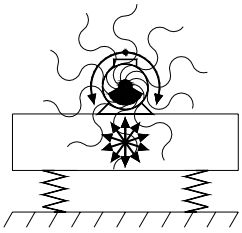
Fig.1

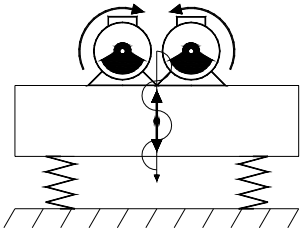
Fig.2

具单振动电机的系统

这项系统可用于装料和卸料的滑槽、装料漏斗和振动底端，使得物料流畅地滑动，在运动过程中不积累障碍。也可用于制造倾斜筛 (图 3)。

System with one motor vibrator

These systems can be used for loading and unloading chutes, hoppers and vibrating bottoms, and improve the smooth passage of the material avoiding any accumulations during transportation. They are also ideal to realize tilted screens (fig.3).

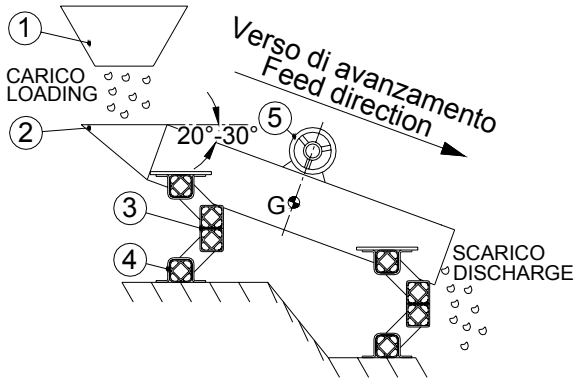

图例说明/ *Key*:

1: 装料漏斗 / *Load hopper*

2: 振动平面 / *Oscillating feed plane*

3: VIB DE 型振动组件 / *Elastic components VIB type DE*

4: VIB SR 型支撑夹具 / *Clamp VIB type SR*

5: 振动电机 / *Vibrating motor*

图 3

具双振动电机的系统

这项系统有助于建造输送机、分离机、筛、校准器、定位器、给料机等 (图 4)。 振动电机的旋转方向应相反，其受力直线应通过机器重心。

System with two motor vibrators

This system is used to produce conveyors, separators, screens, calibrators, positioners, feeders, etc. (fig 4). The sense of rotation of motor vibrators must be opposite and their straight line must pass by the centre of gravity of the machine.

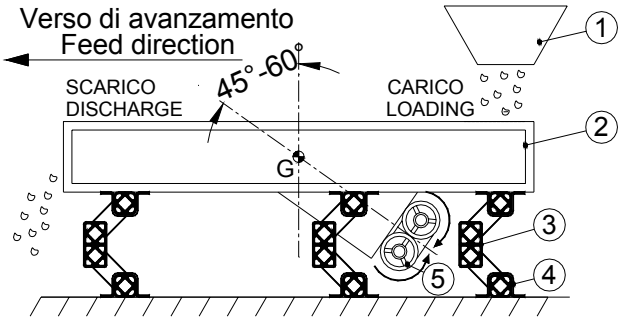

图例说明/ *Key*:

1: 装料漏斗 / *Load hopper*

2: 振动平面 / *Oscillating feed plane*

3: VIB DE 型振动组件 / *Elastic components VIB type DE*

4: VIB SR 型支撑夹具 / *Clamp VIB type SR*

5: 振动电机 / *Vibrating motor*

图 4

计算步骤和公式 (“内装”**双振动电机**)

CALCULATION SYSTEMS AND FORMULA (with two on board vibrating motors on board):

	特定重量 *SPECIFIC WEIGHT*	粒度 *GRANULOMETRY*	旋转速度 / *Rotation velocity*			
			750 rpm	1000 rpm	1500 rpm	3000 rpm
输送 *RECTILINEAR CONVEYING*	A	1			■	■
		2		■	■	
		3	■	■		
	B	1			■	
		2		■		
		3	■	■		

Legenda:

- A= 高 / *high*; B= 低 / *low*;
- 1= 细 / *small*; 2= 中 / *average*; 3= 粗 / *coarse*

为了计算 VIB 振动组件的确定尺寸，应了解振动块的总重量，此总重量为渠槽重和振动电机之和，加上所输送物料重量的大约 20%。一旦确定这个数据，将它除以想要使用的悬架的数目。应了解为了使 VIB 悬架具有良好的效能，负载有必要在每个悬架上分配均匀。一般来讲，在“内装”电机的振动输送机中，这些电机应安装在卸料端渠槽的上端（图 5）或者在装料端渠槽的下端（图 3），但是如此会造成重心的移动。因此有必要使用 6 个支撑（参照图 5 的布局，4 个在前端 2 个在后端，或者参照图 6 布局，4 个在后端 2 个在前端），将它们安置，保证每个支撑承担类似的负载。

It is essential to know the total weight of the oscillating mass in order to select the appropriate size of the VIB oscillating element. The oscillating mass is the sum of the weight of the channel added with the weight of the motor vibrators plus approximately 20% of the weight of the carried material. Once this value has been defined, divide it by the number of suspensions that you need to use. You should be well aware that VIB suspensions performance depends on the even distribution of the load on each suspension. Generally, vibrating conveyors with “on board” motor vibrators are mounted over the channel on the unloading section (fig. 5) or under the channel on the loading section (fig. 3). This however causes a shift of the centre of gravity. As a consequence, you should use and position 6 supports (4 in the front and 2 in the rear for the configuration of figure 5, or 4 in the rear and 2 in the front for the configuration of figure 6) ensuring that they are equally charged with the same load.

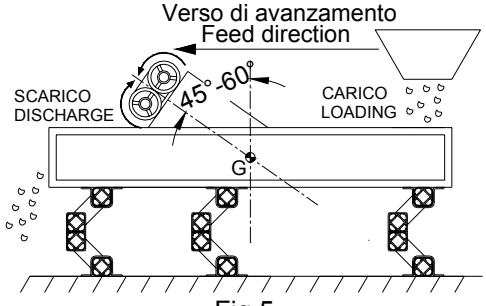

Fig.5

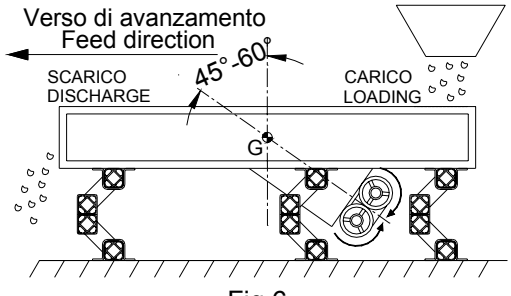

Fig.6

命名 / *Nomenclature:*

符号 *Symbol*	描述 *Description*	**计量单位 / Measure unit**
D_m	最高振幅 *Maximum Amplitude*	[mm]
f_n	固有频率 *Own frequency*	[Hz]
f_0	进入系统频率 *Entrance frequency in the system*	[Hz]
g	重力加速 *Gravitational acceleration*	[m/s^2]
G	总重量 *Total weight*	[N]
G_g	槽重 *Chute weight*	[N]
G_m	物料重量 *Material weight*	[N]

符号 *Symbol*	描述 *Description*	**计量单位 / Measure unit**
G_v	振动电机重量 *Motor vibrators weight*	[N]
J	振动机器指数 *Oscillating machine factor*	
M_t	振动电机总静力矩 *Total motor vibrators static moment*	[N/mm]
n	振动电机旋转速度 *Motor vibrators rotation velocity*	[min^{-1}]
R_e	偏心半径 *Eccentric radius*	[mm]
V_a	送料速度 *Material feed velocity*	[m/min]
ξ	绝缘指数 *Isolation factor*	[%]

主要计算公式 / Main calculation formula:

公式 / *Formula*	**计量单位 Measure unit**
G: $G_g + G_m \cdot \frac{22}{100} + 2 \cdot G_v$	[N]
f_0: $\frac{n}{60}$	[Hz]
$D_m : \frac{2 \cdot M_t \cdot 9.81}{G}$	[mm]

公式 / *Formula*	**计量单位 Measure unit**
$\xi = \frac{\left(\frac{f_0}{f_n}\right)^2 - 2}{\left(\frac{f_0}{f_n}\right)^2 - 1} \cdot 100$	[%]
$J : \frac{\left(\frac{2 \cdot \pi}{60} \cdot n\right)^2 \cdot D_m}{9810 \cdot 2}$	

理论速度图 / *Theoretical velocity graph*:

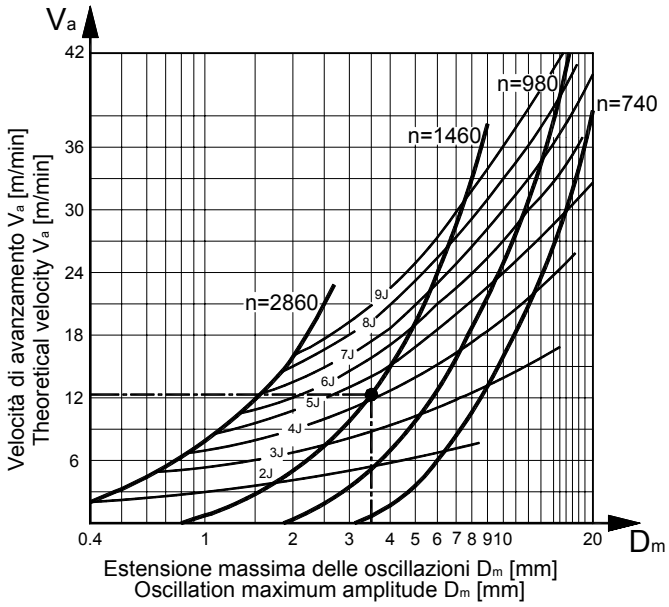

这张图用于计算在与滑动平面成 45°安装的双振动电机输 送机上的理论送料速度。 但是实际送料速度 V_r 取决于所输送物料的种类。实际速度 V_r 由此关系式计算: $V_r = V_a \cdot \lambda$

在此 λ 是由所输送物料种类所决定的降低系数。

This graph can be used to determine the theoretical feed velocity of the material in a conveyor with two on board motor vibrators which are positioned at 45° versus the sliding plane.

The real feed velocity V_r depends on the type of product being carried. Real velocity V_r is given by the relation: $V_r = V_a \cdot \lambda$

Where λ is the coefficient of reduction generated by the cohesion which depends on the type of material to be carried.

所输送物料种类 *Carried product type*	λ	所输送物料种类 *Carried product type*	λ
砾石 *Gravel*	0.95	木屑 *Wood chips*	0.75
沙 *Sand*	0.70	带叶蔬菜 *Leaf vegetable*	0.70
煤 (细颗粒) *Coal (small granulometry)*	0.80	糖 *Sugar*	0.85
煤 (粗颗粒) *Coal (coarse granulometry)*	0.85	盐 *Salt*	0.95

计算实例: 具内装双振动电机和 VIB DE 弹性悬架的带叶蔬菜输送机的理论送料速度

***CALCULATION EXAMPLE**: Determination of the real feed velocity of the material on a leaf vegetable conveyor actuated by two on board vibrating motors and elastic suspension VIB DE.*

起始数据 / *Given data*:

D_m: 最大振幅:
Maximum amplitude: 3.5 mm

n: 双振动电机旋转速度:
Vibrating motors rotational velocity: 1460 min^{-1}

λ: 降低系数 (带叶蔬菜)
Reduction coefficient (leaf vegetable): 0.70

未知数据 / *Unknow data*:

V_a: 理论送料速度 / *Theoretical feed velocity*

V_r: 实际送料速度 / *Real feed velocity*

计算速度 / *Calculation steps*:

R_e: 偏心半径
Eccentric radius

$$= \frac{D_m}{2} = \frac{3{,}5}{2} = 1{,}75 \text{ mm}$$

J: 振动机器指数
Oscillating machine factor

$$= \frac{\left(\frac{2 \cdot \pi \cdot n}{60}\right)^2 \cdot Re}{9810} = \frac{\left(\frac{\pi \cdot 1460}{30}\right)^2 \cdot 1.75}{9810} = 4.2$$

V_a: 理论送料速度 （ 由“理论送料速度图”获得 ）
Theoretical feed velocity (obtained from “Theoretical velocity graph”) = 12.5 m/min

V_r: 实际速度
Real feed velocity $= V_a \cdot \lambda = 12.5 \cdot 0.70 = 8.75$ m/min

振动组件选择列表: 使用振动电机和离心重块驱动

SELECTION TABLE OF OSCILLATING COMPONENTS: MOTOR VIBRATOR OR ECCENTRIC MASSES OPERATION

	型号 – *Type*					
↓ 应用 *Application* / 产品 → *Product* / 驱动装置 *Device*	**DE ,DE R DE-2L,DE-2LR** 第 49-50 / 52-53 页	**DE-SYM** 第 54 页	**AN-D** 第 57 页	**AD-L** 第 59 页	**BF** 第 61 页	**CR-P** 第 63 页
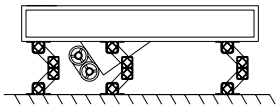	具槽上驱动 直线振动组 *Rectilinear oscillating unit operated from the chute*	具槽上驱动 直线振动组 *Rectilinear oscillating unit operated from the*				
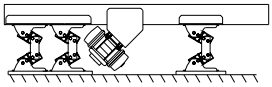			具槽上驱动 直线振动组 *Rectilinear oscillating unit operated from*			
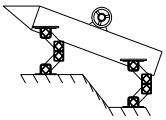	具槽上驱动倾斜振动组 *Tilted oscillating unit operated from the chute*	具槽上驱动 倾斜振动组 *Tilted oscillating unit operated from the chute*				
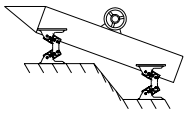			具槽上驱动 倾斜振动组 *Tilted oscillating unit operated from the chute*			
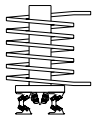			螺旋式起重机用 振动组 *Oscillating unit for spiral elevator*			
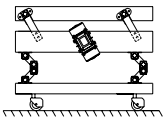	平衡重块地面绝缘 *Ground insulation of the counter mass*	平衡重块地面绝缘 *Ground insulation of the counter*		在平衡重块上驱动的直线振动组 *Rectilinear oscillating unit*		
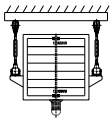					悬挂或支撑的旋转式振动组 *Rotating oscillating unit – suspended or*	
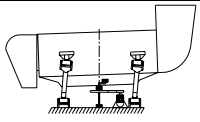						悬挂或支撑的旋转式振动组 *Rotating oscillating unit – suspended or*
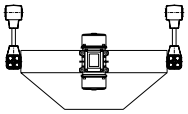					用于振动底端或筒仓提取器 *Oscillating unit for vibrating bottoms or silo*	

VIB 弹性组件 型号: DE / *Elastic Components VIB Type: DE*

Tipo Type DE

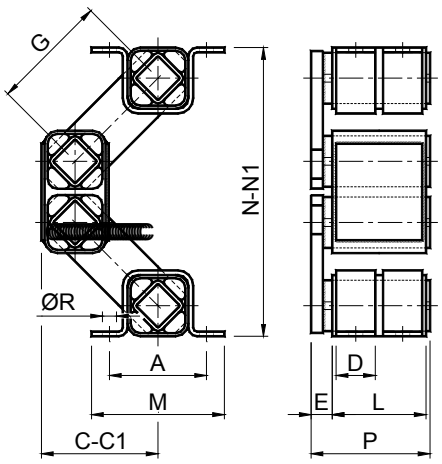

型号 *Type*	编号 N°	Q	A	C	C1	D	E	G	L	M	N	N1	P	R	重量 *Weight* in kg
DE 20	**RE020742**	0- 150	50	70	89	25	10	80	40	65	165	120	52	7	0.76
DE 30	**RE020744**	116- 280	60	87	107	30	14	100	50	80	203	150	67	9	1.75
DE 40	**RE020746**	238- 760	80	94	114	35	17	100	60	105	230	170	80	11	3.72
DE 50	**RE020748**	580- 1500	100	122	146	40	21	125	80	125	295	225	104	13	5.57
DE 60	**RE020750**	1160- 2880	115	138	167	45	28	140	100	145	340	260	132	13	11.00
DE 70	**RE020752**	2380- 5780	130	152	182	50	35	150	120	170	370	270	160	18	18.50

Q: 每个悬架最大负载 以 N 表示/ *Max loading in N per suspension*

C: 无负载 / *loadless* / **C1:** 最大负载 / *max loaded*

N: 无负载 / *loadless* / **N1:** 最大负载 / *max loaded*

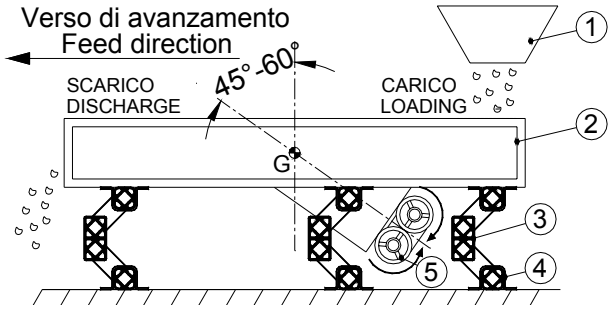

图例说明/ *Key*:

1: 装料漏斗 / *Load hopper*

2: 振动平面 / *Oscillating feed plane*

3: VIB DE 型振动组件 / *Elastic components VIB type DE*

4: VIB SR 型支撑夹具 / *Clamp VIB type SR*

5: 振动电机 / *Vibrating motor*

G: 总重量 / *Total weight*

型号 *TYPE*	夹具 *CLAMP*	数目 *QUANTITY*
DE 20	**SR 20**	**2**
DE 30	**SR 30**	**2**
DE 40	**SR 40**	**2**
DE 50	**SR 50**	**4**
DE 60	**SR 60**	**4**
DE 70	**SR 70**	**4**

材料

尺寸从 20 到 60，外壳和手柄为钢制，双中心体为铝制拉丝。尺寸为 70, 外壳、手柄、双中心体均为钢制。

处理

外壳和手柄均为烤炉涂漆。

应用

DE 振动组件主要应用于建造在使用在内装振动电机或离心驱动的输送机和振动筛中的悬架。

为了 DE 悬架安装正确简便，我们建议使用另外提供的 SR 夹具。

MATERIALS

From size 20 to 60 external body and arms are made by steel, while double inner body is made out of light alloy profile. Size 70: external body, arms and inner double body are made in steel.

TREATMENTS

The external body and the arms are oven-painted.

DUTY

The DE oscillating element is generally used to realize suspensions for conveyors and vibrating screens actuated by motor vibrators or "on board" eccentric.

We recommend that you use SR brackets – which are supplied separately – in order to facilitate the correct mounting of DE suspensions.

VIB 弹性组件 型号: DE R / *Elastic Components **VIB** Type: **DE R***

Tipo Type DE 20-30-40 R

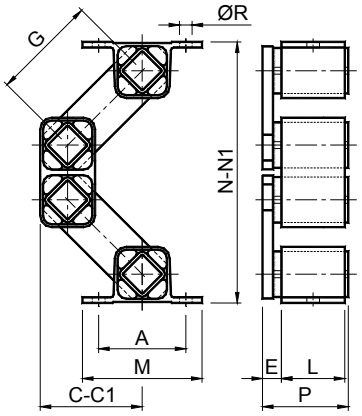

Tipo Type DE 50 R

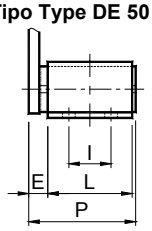

Tipo Type DE 60 R - DE 70 R

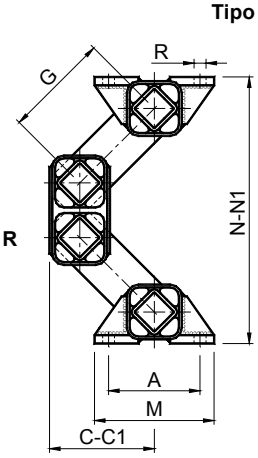

Tipo Type DE 70 R/2

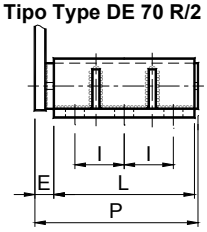

型号 *Type*	编号 N°	Q	A	C	C1	E	G	I	L	M	N	N1	P	R	重量 *Weight* in kg
DE 20 R	**REA20742**	0- 150	50	71	89	10	80	-	40	65	169	124	52	7	0.51
DE 30 R	**REA20744**	116- 280	60	87	107	14	100	-	50	80	208	155	67	9	1.15
DE 40 R	**REA20746**	238- 760	80	94	114	17	100	-	60	105	235	175	80	11	2.20
DE 50 R	**REA20748**	580- 1500	100	120	147	21	125	-	80	125	305	235	104	13	5.10
DE 60 R	**REA20750**	1160- 2880	115	141	172	28	140	65	100	145	340	260	132	13x20	12.00
DE 70 R	**REA20752**	2380- 5780	130	152	182	35	150	60	120	170	380	280	160	17x27	20.00
DE 70 R / 2	**RE020753**	4074- 9700	130	152	182	40	150	70	200	170	380	280	245	17x27	25.00

Q: 每个悬架最大负载 / *Max loading in N per suspension*

C: 无负载 / *loadless* / **C1:** 最大负载 / *max loaded*

N: 无负载 / *loadless* / **N1:** 最大负载 / *max loaded*

材料

尺寸从 20 到 50， 外壳和双中心体为铝制拉丝， 手柄为钢制。

DE 60 R：外壳和手柄为钢制，双中心体为铝制拉丝。

DE 70 R - DE 70 R / 2： 外壳、手柄、双中心体均为钢制。

处理

外壳、双中心体、手柄和夹具均为烤炉涂漆。

应用

DE 振动组件主要应用于建造在使用“内装的”振动电机或离心驱动的输送机和振动筛中的悬架。

“DE R”所有外壳配有法兰，可用于组件固定，无需使用夹具。

MATERIALS

From size DE 20 R to 50 R external body and internal double body are made out of light alloy profile while arms are in steel. DE 60: The external bodies, the clamps and the arms are made of steel instead while the internal double body is made of light alloy profile.
DE 60 R: The external bodies and the arms are made of steel instead while the internal double body is made of light alloy profile.
DE 70 R – DE 70 R / 2: External bodies, arms and internal double body are made of steel.

TREATMENTS

The external bodies, the internal double body, the clamps and the arms are oven-painted.

DUTY

The DE oscillating element is generally used to realize suspensions for conveyors and vibrating screens actuated by motor vibrators or “on board” eccentric.
All “DE R” oscillating mountings do not need any clamps, because they have already flanges on external bodies.

动力弹性数据列表 f=960 min^{-1} D_m= 8 mm

***DYNAMIC SPRING VALUE TABLE** at f=960 min^{-1} and D_m= 8 mm*

型号 ***TYPE***	**垂直** ***VERTICAL***	**水平** ***HORIZONTAL***
	E_d [N/mm]	E_d [N/mm]
DE 20 - DE 20 R	9.6	5.8
DE 30 - DE 30 R	17.3	13.4
DE 40 - DE 40 R	38.4	24.0
DE 50 - DE 50 R	57.6	28.8
DE 60 - DE 60 R	96.0	48.0
DE 70 - DE 70 R	182.4	81.6
DE 70 R / 2	307.2	134.4

f: 旋转速度 / *rotation velocity* [min^{-1}];

D_m: 最大振幅 / *Max amplitude* [mm]

计算实例: 计算 DE 和 DE R 悬架的准确尺寸

***CALCULATION EXAMPLE**: Determination of DE and DE R suspension correct size.*

起始数据 / *Given data*:

X: 悬架数目 / *Suspension number*: 6

G_m: 所输送物料总重 / *Material weight*: 500 N

G_g: 槽重 / *Chute weight*: 3000 N

G_v: 一架振动电机重量/ *Motor vibrators weight*: 200 N

未知数据/ *Unknow data*:

Q_0: 每个悬架的负载 / *Load capacity per mounting*

计算步骤 / *Calculation steps*:

总重量 G 为槽重 (**G_g**) 与所输送物料重量的(**G_m**) 的 22%的总和加上振动电机的重量。

*The total weight G is given by the sum of weight of the chute (**G_g**) plus 22% of the weight of the material to be conveyed (**G_m**) plus the weight of the motovibrators.*

G: 总重量 *Total weight* $= G_g + \frac{G_m \cdot 22}{100} + 2 \cdot G_V = 3000 + \frac{500 \cdot 22}{100} + 2 \cdot 200 = 3510$ N

Q_0: 总重量(G)除以悬架数目(X), 可得到悬架种类，即:

The suspension type is obtained by dividing the total weight (G) by the number of mountings (X), so: $= \frac{G}{X} = \frac{3510}{6} = 585$ N

结论: 应使用 6 个 **DE 50** 悬架。

***Conclusion:** It must be used 6 pcs **DE 50** mountings.*

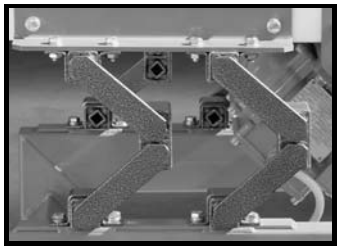

负载图 / *LOAD GRAPH*

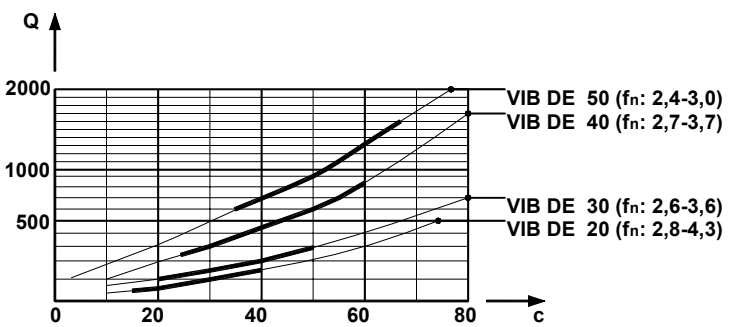

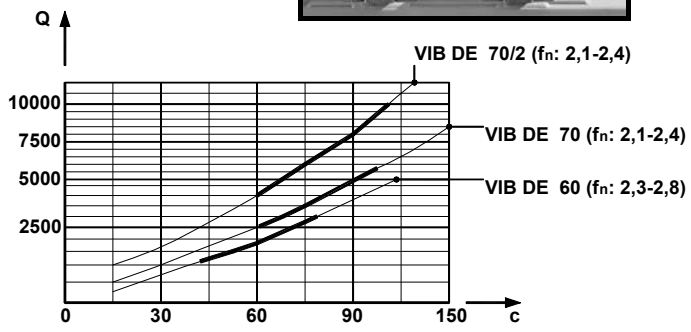

(**Q**: 垂直压缩负载 [N]; **c**: 变形量 [mm]; **f_n**: 固有频率 [Hz])

(**Q**: *Vertical compression load [N]; **c**: Set [mm]; **f_n**: Own frequency [Hz])*

VIB 弹性组件 型号: DE-2L / *Elastic Component VIB Type: DE-2L*

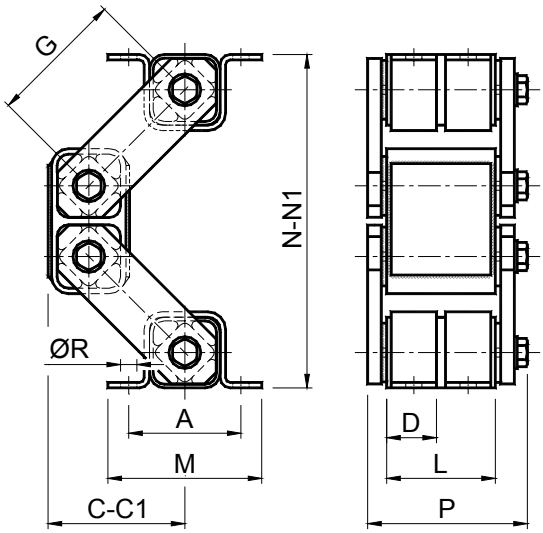

型号 *Type*	编号 N°	Q	A	C	C1	D	G	L	M	N	N1	P	R	重量 *Weight* in kg
DE-2L 20	**RE020862**	0- 150	50	70	89	/	80	40	65	165	120	52	7	0.80
DE-2L 30	**RE020864**	116- 280	60	87	107	/	100	50	80	203	150	67	9	1.60
DE-2L 40	**RE020866**	238- 760	80	94	114	/	100	60	105	230	170	80	11	3.10
DE-2L 50	**RE020868**	580- 1500	100	122	146	40	125	80	125	295	225	104	13	7.30
DE-2L 60	**RE020870**	1160- 2880	115	138	167	45	140	100	145	340	260	132	13	12.60
DE-2L 70	**RE020872**	2380- 5780	130	152	182	50	150	120	170	370	270	160	18	21.20

Q: 每个悬架负载以 N 表示 / *Max loading in N per suspension*

C: 无负载/ *loadless* / **C1:** 最大负载下 / *max loaded*

N: 无负载 / *loadless* / **N1:** 最大负载下 / *max loaded*

材料 / *MATERIALS*

尺寸从 20 到 60，外壳和手柄为钢制，双中心体为铝制拉丝。尺寸为 70，外壳、手柄和双中心体均为钢制。

Fom size 20 to 60 external body and arms are made of steel, while double inner body is made out of light alloy profile. Size 70: external, arms and inner double body are in steel.

处理 / *TREATMENTS*

外壳、双中心体、手柄和夹具均为烤炉涂漆。External body, double inner body, clamps and arms are oven painted.

应用

DE-2L 振动组件主要应用于建造使用内装振动电机或离心驱动的输送机和振动筛中的悬架。

与 DE 组件相比，这些弹性组件在两边均配有手柄，以便在输送机中通过的过程中可承受侧面应力和渠槽的“摆动”。

为了 **DE-2L** 悬架安装正确简便，我们建议使用另外提供的 **SR** 夹具。

DUTY

The DE-2L oscillating element is generally used to realize suspensions for conveyors and vibrating screens operated by motor vibrators or “on board” eccentric. If compared with the DE elements, these elastic components are fitted with levers on both sides in order to better respond to the lateral stresses and the “wobbling” of the channel during the passage through the in particular condition at the starting and at the switching off.

We recommend that you use SR brackets – which are supplied separately – in order to facilitate the correct mounting of DE-2L suspensions.

型号 *TYPE*	夹具 *CLAMP*	数目 *QUANTITY*
DE-2L 20	**SR 20**	**2**
DE-2L 30	**SR 30**	**2**
DE-2L 40	**SR 40**	**2**
DE-2L 50	**SR 50**	**4**
DE-2L 60	**SR 60**	**4**
DE-2L 70	**SR 70**	**4**

VIB 弹性组件 型号: **DE-2L R** / *Elastic Component **VIB** Type: **DE-2L R***

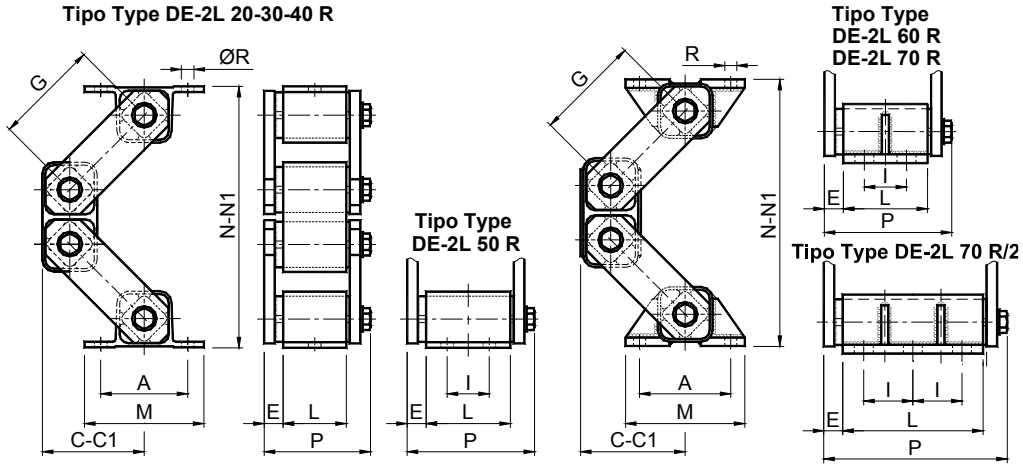

型号 *Type*	编号 N°	Q	A	C	C1	G	L	M	N	N1	P	R	重量 *Weight* in kg
DE-2L 20 R	**REA20862**	0- 150	50	71	89	80	40	65	169	124	74	7	0.80
DE-2L 30 R	**REA20864**	116- 280	60	87	107	100	50	80	208	155	86	9	1.60
DE-2L 40 R	**REA20866**	238- 760	80	94	114	100	60	105	235	175	100	11	3.10
DE-2L 50 R	**REA20868**	580- 1500	100	120	147	125	80	125	305	235	124	13	7.30
DE-2L 60 R	**REA20870**	1160- 2880	115	141	172	140	100	145	353	273	154	13	14.00
DE-2L 70 R	**REA20872**	2380- 5780	130	152	182	150	120	170	380	280	187	17	22.20
DE-2L 70 R/2	**REA20873**	4074 9700	130	152	182	150	200	170	380	280	262	17	27.20

Q: 每个悬架负载以 N 表示 / *Max loading in N per suspension*

C: 无负载/ *loadless* / **C1:** 最大负载下 / *max loaded*

N: 无负载 / *loadless* / **N1:** 最大负载下 / *max loaded*

材料

尺寸从 20 到 50， 外壳和双中心体为铝制拉丝， 手柄为钢制。

DE-2L 60 R：外壳和手柄为钢制，双中心体为铝制拉丝。

DE-2L 70 R - DE-2L 70 R / 2： 外壳、手柄、双中心体均为钢制。

处理

外壳、双中心体、手柄和夹具均为烤炉涂漆。

MATERIALS

From size 20 to 50:external body and inner double body are made out of light alloy profile while arms are made of steel.
DE-2L 60R: external body and arms are made of steel while inner double body is made our of light alloy profile.
DE-2L 70R – DE-2L 70R/2: external body, arms and double inner body are made of steel.

TREATMENTS

The external bodies, the internal double body, and the arms are oven-painted.

应用

DE-2L R 振动组件主要应用于建造使用内装振动电机或离心驱动的输送机和振动筛中的悬架。与 DE 组件相比，这些弹性组件在两边均配有手柄， 以便在输送机中通过的过程中可承受侧面应力和渠槽的“摆动”。

“DE-2L R”组件所有外壳配有法兰，可保证组件固定，无需使用夹具。

DUTY

The DE-2L R oscillating element is generally used to realize suspensions for conveyors and vibrating screens operated by motor vibrators or “on board” eccentric. If compared with the DE elements, these elastic components are fitted with levers on both sides in order to better respond to the lateral stresses and the “wobbling” of the channel during the passage through the in particular condition at the starting and at the switching off. All “DE-2L R” oscillating mountings do not need any clamps, because they have already flanges on external bodies.

VIB 弹性组件 型号: **DE-SYM** / *Elastic Component **VIB** Type: **DE-SYM***

Tipo Type DE 70 SYM

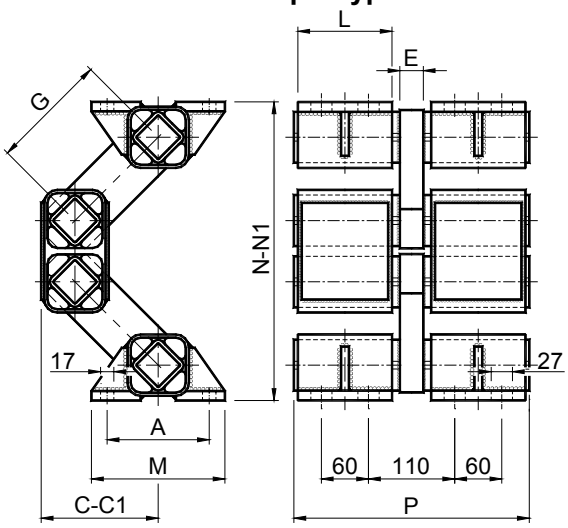

Tipo Type DE 70 / 2 SYM

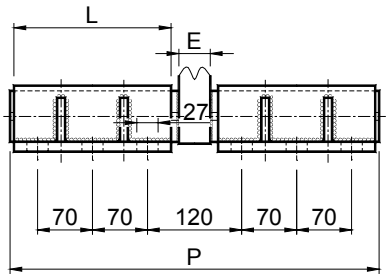

型号 *Type*	编号 N°	Q	A	C	C1	E	G	L	N	N1	M	P	重量 *Weight* in kg
DE 70 SYM	**RE020960**	4850-11640	130	152	182	30	150	120	380	280	170	300	33.00
DE 70 / 2 SYM	**RE020962**	8148-19400	130	152	182	40	150	200	380	280	170	470	51.00

Q: 每个悬架负载以 N 表示 / *Max loading in N per suspension*

C: 无负载/ *loadless* / **C1:** 最大负载下 / *max loaded*

N: 无负载 / *loadless* / **N1:** 最大负载下 / *max loaded*

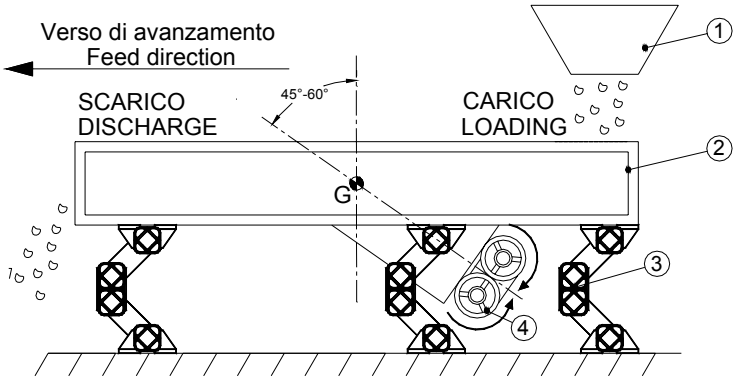

图例说明/ *Key*:

1: 装料漏斗 / *Load hopper*

2: 振动平面 / *Oscillating feed plane*

3: VIB DE 70 SYM 振动组件
Elastic components VIB type DE 70 SYM

4: VIB SR 型支撑夹具 / *Clamp VIB type DE 70 SYM*

5: 振动电机 / *Vibrating motor*

G: 总重量 / *Total weight*

材料

外壳和手柄为钢制。

处理

外壳和手柄均为烤炉涂漆。

应用

DE-SYM 振动组件主要应用于建造使用内装振动电机或离心驱动的输送机和振动筛中的悬架。

由于 DE 70 SYM 或 DE 70/2 SYM 与 DE 70 DE 70 R 或 DE 70 R / 2 具有同样的固有振动频率，可同时使用。

MATERIALS

The external bodies and the arms are made of steel.

TREATMENTS

The external bodies and the arms are oven-painted.

DUTY

The DE-SYM oscillating element is generally used to realize suspensions for conveyors and vibrating screens of big proportion actuated by motor vibrators or "on board" eccentric.
DE 70 SYM or DE 70 / 2 SYM suspension can be combined with DE 70 or DE 70 R or DE 70 R / 2 because all these elements have the identical own frequency.

动力弹性 条件为 f=960 min^{-1} 和 D_m= 8 mm / ***DYNAMIC SPRING VALUE*** *at f=960 min^{-1} e D_m= 8 mm*

型号 ***TYPE***	**垂直** ***VERTICAL***	**水平** ***HORIZONTAL***
	E_d [N/m]	E_d [N/m]
DE 70 SYM	365	614
DE 70 / 2 SYM	163	269

f: 最高频率/ *Max frequency* [min^{-1}]; **D_m:** 最大振幅 / *Max amplitude* [mm]

负载图 / *LOAD GRAPH*

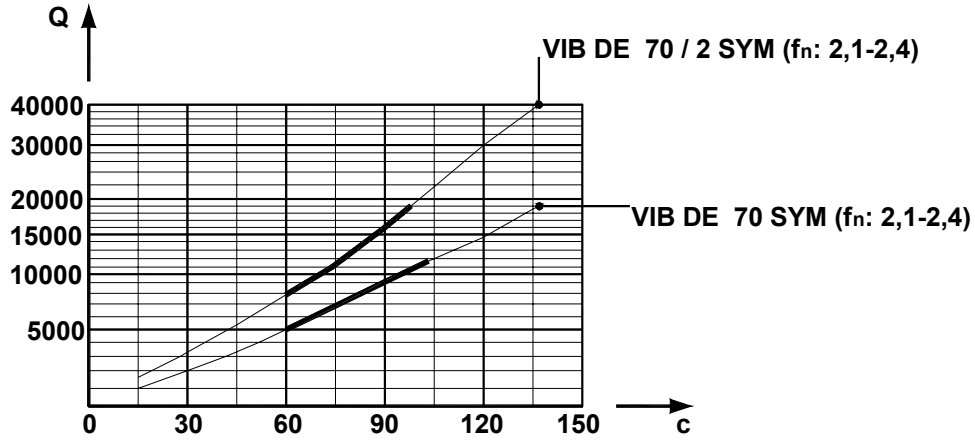

(**Q**: 垂直压缩负载 [N]; **c**: 变形量 [mm]; **f_n**: 固有频率 [Hz])
*(**Q**: Vertical compression load [N]; **c**: Set [mm]; **f_n**: Own frequency [Hz])*

VIB 弹性组件 型号: DE-H / *Elastic Components* ***VIB*** *Type:* ***DE-H***

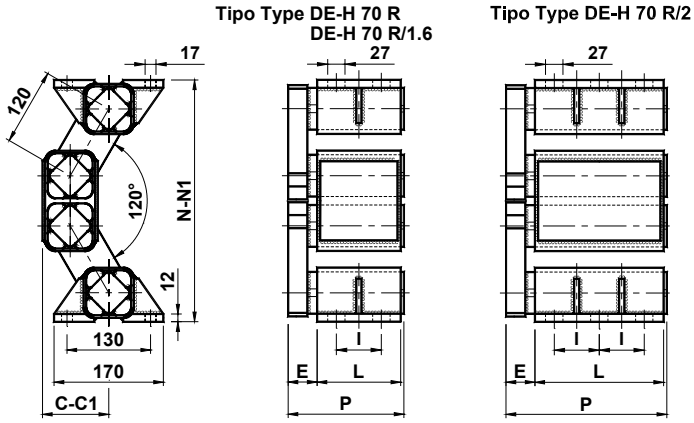

型号 *Type*	编号 N°	Q	C	C1	E	I	L	N1	N1	P	重量 *Weight* in kg
DE-H 70 R	**RE020758**	3390- 8145	105	142	40	60	120	376	311	165	22.00
DE-H 70 R / 1.6	**RE020759**	4650- 10960	105	142	40	70	160	376	311	205	27.00
DE-H 70 R / 2	**REA20753**	5820- 13580	105	142	45	70	200	376	311	250	30.00

Q: 每个悬架负载以 N 表示 / *Max loading in N per suspension*

C: 无负载/ *loadless* / **C1:** 最大负载下 / *max loaded*

N: 无负载 / *loadless* / **N1:** 最大负载下 / *max loaded*

材料

外壳、双中心体和手柄均为钢制。

处理

外壳、双中心体和手柄均为烤炉涂漆。

应用

DE-H 振动组件主要应用于建造使用内装振动电机或离心驱动的输送机和振动筛中的悬架。

MATERIALS

The external body and the arms are made of steel.

TREATMENTS

The external body and the arms are oven-painted.

DUTY

The DE-H oscillating element is generally used to realize suspensions for conveyors and vibrating screens with high loading actuated by motor vibrators or "on board" eccentric.

动力弹性值列表

条件为 f=960 min^{-1} e D_m= 8 mm

DYNAMIC SPRING VALUE TABLE

at f=960 min^{-1} and D_m= 8 mm

型号 *TYPE*	垂直 *VERTICAL*	水平 *HORIZONTAL*
	E_d [N/mm]	E_d [N/mm]
DE-H 70 R	270	130
DE-H 70 R / 1.6	360	172
DE-H 70 R / 2	450	215

f: 旋转速度 / *rotation velocity* [min^{-1}];

D_m: 最大振幅 / *Max amplitude* [mm]

负载曲线 / *LOAD GRAPH*

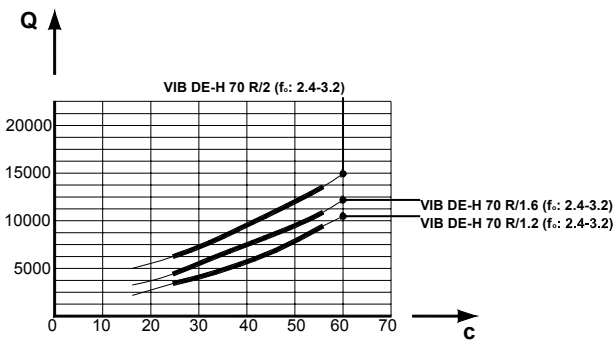

(**Q**: 压缩垂直负载 [N]; **c**: 变形量 [mm]; $\mathbf{f_n}$: 固有频率 [Hz])

(**Q**: *Vertical compression load [N];* ***c****: Set [mm];* $\boldsymbol{f_n}$*: Own frequency [Hz]*)

VIB 弹性组件 型号: AN-D / *Elastic Components VIB Type: AN-D*

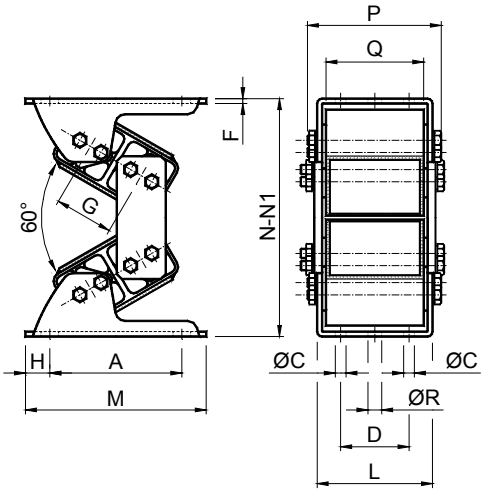

型号 *Type*	编号 N°	Q	A	C	D	G	F	H	L	M	N	N1	P	Q	R	重量 *Weight* in kg
AN-D 30	**RE020880**	485- 1164	90	9	30	31	3	12.5	61	115	137	117	74	50	9	1.30
AN-D 40	**RE020882**	970- 2425	120	9	50	44	4	15	93	150	184	157	116	80	11	2.90
AN-D 50	**RE020884**	1940- 3880	150	11	70	60	5	17.5	118	185	244	209	147	100	13.5	7.50
AN-D 60	**RE020886**	2910- 5820	170	13.5	80	73	6	25	132	220	298	252	168	110	18	11.50
AN-D 70/1.2	**RE020888**	3880- 8730	185	13.5	90	78	6	25	142	235	329	278	166	120	18	22.00
AN-D 70/1.6	**RE020890**	7760- 11640	185	13.5	90	78	8	25	186	235	329	278	214	160	18	25.50
AN-D 70/2.0	**RE020892**	10670- 15520	185	13.5	90	78	8	25	226	235	329	278	260	200	18	29.00

Q: 每个悬架负载以 N 表示 / *Max loading in N per suspension*

N: 无负载 / *loadless* / **N1:** 最大负载下 / *max loaded*

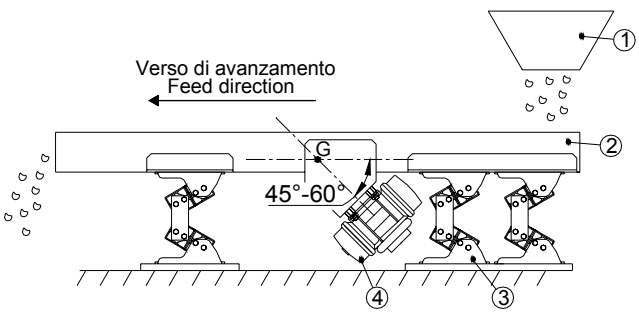

图例说明/ *Key*:

1: 装料漏斗 / *Load hopper*

2: 滑动槽 / *Sliding Chute*

3: VIB AN-D 型振动组件
Oscillating component VIB Type AN-D

4: 振动电机 / *Vibrating motor*

材料

尺寸从 30 到 60，夹具和连接板为钢制，双体和内部方管为铝制拉丝。 尺寸为 70，双体和连接板为钢制，内部方管为铝制拉丝。

处理

双体、夹具和连接板均为烤炉涂漆。

应用

AN-D 振动组件主要应用于建造使用内装振动电机或离心驱动的输送机和振动筛中的悬架。就相应的尺寸与 DE 组件相比，AN-D 弹性组件具有更短的连接部分，因此可在同样尺寸保证更高的承载能力。

MATERIALS

From size 30 to 60 clamps and connection links are in steel while double inner body are made out of light alloy profile. From size 70 double body, clamps and connection links are made of steel while inner square are made our of light alloy profile.

TREATMENTS

Double body, clamps and connection links are oven painted.

DUTY

The elastic component AN-D is generally used to realize suspensions for conveyors and screen actuated by motor vibrators or "on board" eccentric.

The elastic mountings AN-D have the connecting arms shorter than the same size of type DE and so they have an higher loading capacity than an equal size of type DE.

最大振幅 / *MAXIMUM AMPLITUDE*

型号 *TYPE*	D_m max		
	f=740	f=980	f=1460
AN-D 30	5	4	3
AN-D 40	6	5	4
AN-D 50	8	7	5
AN-D 60	10	8	6
AN-D 70/1.2	12	10	8
AN-D 70/1.6	12	10	8
AN-D 70/2.0	12	10	8

D_m: 最大振幅 / *Max amplitude*;

f: 偏心旋转速度
Rotation eccentric velocity

动力弹性 / *DYNAMIC SPRING VALUE*

型号 *TYPE*	D_m	E_d	
		垂直	水平
AN-D 30	4	96	19
AN-D 40	4	154	34
AN-D 50	6	178	38
AN-D 60	8	221	67
AN-D 70/1.2	8	298	115
AN-D 70/1.6	8	413	154
AN-D 70/2.0	8	518	190

E_d: 动力弹性 [N/mm] f=980 min^{-1}, **D_m 在表格中特指**
E_d: *Dynamic spring value [N/mm] at f=980 min^{-1}, with **D_m** as in the table*

计算实例: 计算 AN-D 悬架的准确尺寸。

***CALCULATION EXAMPLE*:** *Determination of the correct AN-D suspension correct size.*

X: 悬架数目 / *Suspension number*: 6

G_m: 所输送物料重量/ *Material weight*: 500 N

G_g: 槽重 / *Chute weight*: 3000 N

G_v: 振动电机重量 / *Motor vibrators weight*: 200 N

未知数据/ *Unknow data*:

Q_0: 每个悬架的负载 / *Load capacity per mounting*

计算步骤 / *Calculation steps*:

总重量 G 为槽重 (**G_g**) 与所输送物料重量的(**G_m**) 的 22%的总和加上振动电机的重量。
*The total weight G is given by the sum of weight of the chute (**G_g**) plus 22% of the weight of the material to be conveyed (**G_m**) plus the weight of the motovibrators.*

G: 总重量 / *Total weight*

$$= G_g + \frac{G_m \cdot 22}{100} + 2 \cdot G_v = 3000 + \frac{500 \cdot 22}{100} + 2 \cdot 200 = 3510 \text{ N}$$

Q_0:

总重量(G)除以悬架数目(X), 可得到悬架种类，即:
The suspension type is obtained by dividing the total weight (G) by the number of mountings (X), so:

$$= \frac{G}{X} = \frac{3510}{6} = 585 \text{ N}$$

结论: 应使用 6 个 **AN-D 30** 悬架。
Conclusion: *It must be used 6 pcs* **AN-D 30** *mountings.*

负载图 / *LOAD GRAPH*

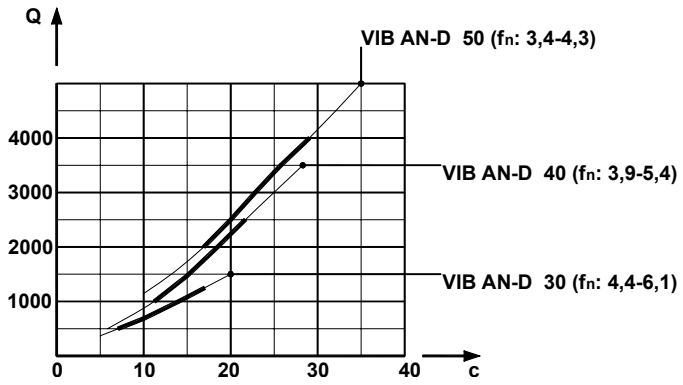

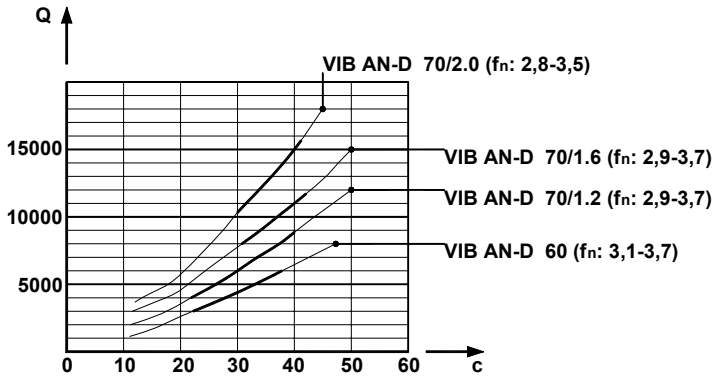

(**Q**: 垂直压缩负载 [N]; **c**: 变形量 [mm]; **f_n**: 固有频率 [Hz])
(***Q**: Vertical compression load [N]; **c**: Set [mm]; **f_n**: Own frequency [Hz])*

VIB 弹性组件 型号: AD-L / *Elastic Components VIB Type: AD-L*

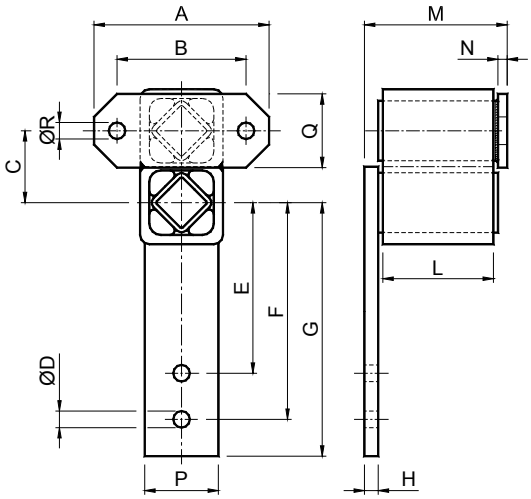

型号 *Type*	编号 N°	A	B	C	D	E	F	G	H	M	N	L	P	Q	R	重量 *Weight* in kg
AD-L 30	**RE021192**	85	60	31	9.5	110	130	150	8	73	5	50	35	35	9.5	1.50
AD-L 40	**RE021193**	110	80	44	11.5	120	150	175	8	83	5	60	45	45	11.5	2.25
AD-L 50	**RE021194**	140	100	60	14	135	170	200	10	108	6	80	60	60	14	3.20
AD-L 60	**RE021195**	180	130	73	18	160	205	240	12	136	8	100	70	70	18	6.50
AD-L 70	**RE021196**	190	140	78	18	185	235	275	15	165	10	120	80	80	18	10.00

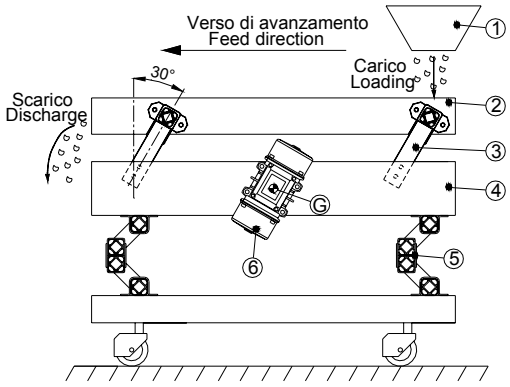

图例说明/ *Key*:

1: 装料漏斗 / *Load hopper*

2: 滑动槽(G_2) / *Sliding chute (G_2)*

3: VIB AD-L 型振动组件
Oscillating component VIB type AD-L

4. 平衡重块 (G_1) / *Counter mass (G_1)*

5: VIB DE 型振动组件
Oscillating Component VIB type DE

6: 振动电机 / *Motor vibrators*

G: 所考虑的总重量 / *Considered total weight*

材料

尺寸从 30 到 60，双外壳为铝制拉丝，方管和法兰为钢制。尺寸为 70，双外壳、方管和法兰均为钢制。

处理

外壳、方管和法兰均为烤炉涂漆。

应用

AD-L 振动组件主要应用于建造具双重块并在平衡重块 G_1 上驱动的自由振动渠槽。AD-L 振动组件有助于在轻结构、活动结构或不坚硬的地面（比如阁楼）建造低面积的振动平面。

应用简图显示使用一对振动电机对平衡重块 G_1 造成激励。平衡重块 G_1 通过 DE 弹性组件在地面绝缘。在振动平面 G_2 上通过 AD-L 组件将激励放大。这个简单的方法有助于建造无声的振动渠槽，其中振动不传播至地面，因此，不会通过它们传播到安置在附近的其它结构或设备。

MATERIALS

From size 30 to 60 external double body is made out of light alloy profile while flanges are made of steel. Size 70: external body and flanges are made of steel.

TREATMENTS

The external body, the squares and the flanges are oven-painted.

DUTY

The AD-L oscillating element is mainly used to make channels with free oscillations and two masses operated from the counter mass G_1.
AD-L oscillating elements are ideal to build small-sized vibrating planes on light, mobile structures and non-rigid floors (example: loft).
The application diagram includes one excitation by applying a couple of motor vibrators on the counter mass G_1 which is insulated from the floor by the DE elastic components. Excitation is amplified on the vibrating plane G_2 by means of the AD-L elements. This simple diagram is followed to build noiseless vibrating channels where vibrations are not propagated to the ground and, through them to other nearby structures or plants.

为使输送机可在最大效能情况下运行，在 AD-L 之间的距离不应超过 1.5 米，重块 G_1 [N]应为 $2 \cdot G$ [N] ≤ G_1 ≤ $3 \cdot G$ [N] (理想情况) / *In order to optimize the conveyor performance, the distance among AD-L should not exceed 1.5 metres and the mass G_1 [N] must not be: $2 \cdot G$ [N] ≤ G_1 ≤ $3 \cdot G$ [N] (ideal case).*

特定功能列表 / *FUNCTIONAL SPECIFICATION TABLE*

型号 *TYPE*	f=740			f=980			f=1460		
	D_m	E_d	Q	D_m	E_d	Q	D_m	E_d	Q
AD-L 30	/	/	/	4	134	139	3	120	101
AD-L 40	/	/	/	5	154	230	4	149	144
AD-L 50	8	182	499	7	192	379	/	/	/
AD-L 60	10	230	893	8	250	662	/	/	/
AD-L 70	11	336	1363	9	355	998	/	/	/

计算实例: 计算由振动输送机所需的悬架的数目，使用**由** AD-L 50 组成的悬架。

CALCULATION EXAMPLE*: *Determination of the suspension number in a oscillating conveyor, using AD-L 50

起始数据 / *Given data*:

n: 振动电机旋转速度: *Motor vibrators rotation velocity*: 980 min^{-1}

D_m: 最大振幅: *Maximum amplitude*: 7 mm

E_d: 动力弹性: *Dynamic spring value*: 192 [N/mm]

R_e: 振动电机离心半径: *Eccentric radius*: 3,5 mm

G_1: 平衡重块重量: *Counter mass weight*: 2590 N

G_2: 槽重: *Sliding chute weight*: 840 N

G_m: 所输送物料重量: *Material weight*: 100 N

未知数据 / *Unknow data*:

X: 悬架数目 / suspension number

J: 振动机器因数 / *Oscillating machine factor*

E_t: 总弹性 / *Total spring value*

G_t: 综合重量 / *Assembly weight*

计算步骤 / *Calculation steps*:

总重量 G 为槽重 (**G_2**) 与所输送物料重量的(**G_m**) 的 22%的总和。

*The total weight G is given by the sum of weight of the chute (**G_2**) plus 22% of the weight of the material to be conveyed (**G_m**)*

G: 总重量 *Total weight* $= G_2 + \frac{G_m \cdot 22}{100} = 840 + \frac{100 \cdot 22}{100} = 862$ N

核对两个重块 G_1 和 G 之比 / *Mass ratio (G_1/G) check* = $\frac{G_1}{G} = \frac{2590}{862} = 3$ (理想数值 / *Best value*)

$$E_t = \frac{1}{9810} \cdot \left(\frac{G_1 \cdot G}{G_1 + G}\right) \cdot \left(\frac{2 \cdot \pi \cdot n}{60}\right)^2 = \frac{1}{9810} \cdot \left(\frac{2590 \cdot 862}{2590 + 862}\right) \cdot \left(\frac{\pi \cdot 980}{30}\right)^2 = 693.6 \text{ N/mm}$$

X: 悬架总弹性 E_t 应比动力弹性高大约 10%，即:
The total spring value E_t of the mounting must be at least 10% greater that than the dynamic spring value, so: $= \frac{E_t}{0.9 \cdot E_d} = \frac{693.6}{0.9 \cdot 192} = 4.0$

结论: 应使用 4 个 **AD-L 50** 组件。

Conclusion: *It must be used 4 pcs **AD-L 50**.*

J: 振动机器指数: *Oscillating machine factor:* $= \frac{\left(\frac{2 \cdot \pi}{60} \cdot n\right)^2 \cdot D_m}{9810 \cdot 2} = \frac{\left(\frac{\pi}{30} \cdot 980\right)^2 \cdot 7}{9810 \cdot 2} = 3.75$

为整个结构所选择的 VIB DE 型悬架 / *Selection of VIB type DE mountigs for the whole structure*:

G_t: 综合重量 / *Assembly weight* = G_1+G = 2590 + 862 = 3452 N

***所要求的支撑数目 / Support required number*:** 4

***每个支撑的负载 / Load on each support*:** $\frac{3452}{4} = 863$ N

结论: 应使用 4 个 **DE 50** 组件。

***Conclusion*:** *It must be used 4 pcs **DE 50**.*

VIB 弹性组件 型号: BF / *Elastic Components VIB Type: BF*

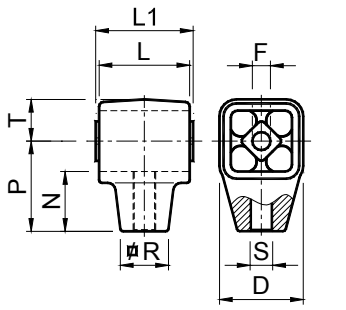

尺寸 30 和 40
SIZES 30 and 40

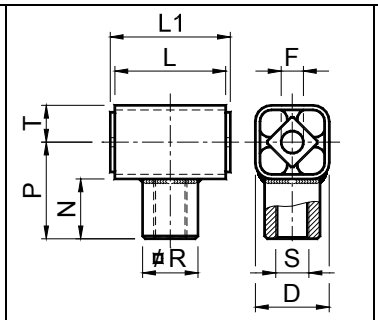

尺寸 50, 55 和 60
SIZES 50, 55 and 60

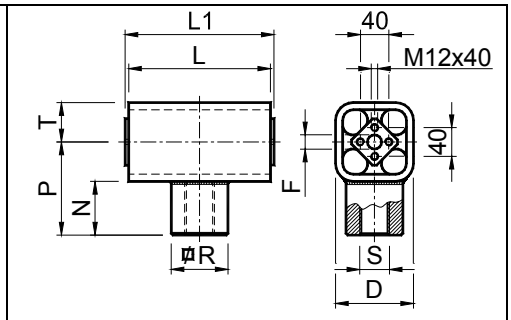

尺寸 70
SIZE 70

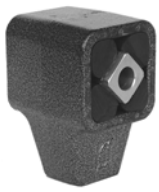

型号 *Type*	编号 N°	Q	D	F	L	L1 +0 -0.3	N	P	R	S	T	重量 *Weight* in kg
BF 30	**RE021154**	575- 1500	54	13 +0 -0.2	60	65	40.5	60	28	M16	27	0.40
BF 30 S	**RE021174**	575- 1500	54	13 +0 -0.2	60	65	40.5	60	28	M16 S	27	0.40
BF 40	**RE021156**	1240- 2850	74	16 +0.5 +0.3	80	90	53	80	42	M20	37	1.00
BF 40 S	**RE021176**	1240- 2850	74	16 +0.5 +0.3	80	90	53	80	42	M20 S	37	1.00
BF 50	**RE021158**	2475- 4750	76	20 +0.5 +0.2	100	110	65	100	45	M24	38	1.75
BF 50 S	**RE021178**	2475- 4750	76	20 +0.5 +0.2	100	110	65	100	45	M24 S	38	1.75
BF 55	**RE021160**	4275- 7125	80	20 +0.5 +0.2	120	130	65	105	60	M36	40	4.70
BF 55 S	**RE021180**	4275- 7125	80	20 +0.5 +0.2	120	130	65	105	60	M36 S	40	4.70
BF 60	**RE021161**	4275- 9500	100	24 +0.5 +0.2	160	150	65	115	60	M36	50	5.50
BF 60 S	**RE021181**	4275- 9500	100	24 +0.5 +0.2	160	150	65	115	60	M36 S	50	5.50
BF 70	**RE021162**	5700- 15200	110	20 +0.5 +0.2	200	210	85	130	80	M42	55	12.30
BF 70 S	**RE021182**	5700- 15200	110	20 +0.5 +0.2	200	210	85	130	80	M42 S	55	12.30

Q: 每个悬架的最大负载，以 N 表示 / *Max loading in N per suspension*

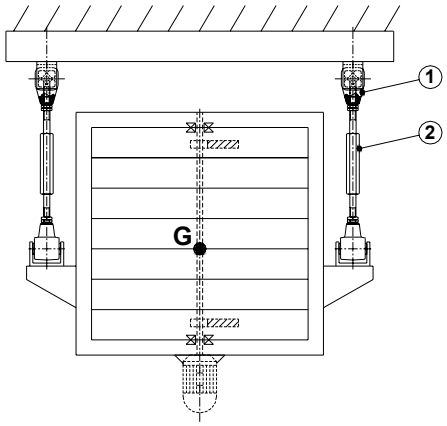

图例说明 / *Key*:

1: VIB BF 型组件 / *BF Type*

2: 连接单位 / *Connecting unit*

l: 轴距 / *Distance between centres*

w: 圆型振动半径
Circular oscillation radius

w_1: 椭圆型振动第一轴
Elliptic oscillation first axis

w_2: 椭圆型振动第二轴
Elliptic oscillation second axis

γ: 正交振动半角
Orthogonal oscillation halfangle

δ: 旋转半角 / *Rotation halfangle*

材料

尺寸为 30、55、60、70，外壳为钢制，尺寸为 40 和 50，外壳为铝制。内部方管为铝制拉丝。

处理

外壳为烤炉涂漆，内部方管由 RAL 烤漆覆盖。

应用

BF 振动组件主要应用于建造以圆型或椭圆型（平面筛）方式振动的悬挂或支撑设备。

BF 组件安装可采取以下两种方式：在正交轴（用于椭圆型轨道）和平行轴（圆型轨道）。在悬挂构型中，为了避免在运动过程中产生的可能造成机器波动的动力扭矩，BF 应安置在与重心平面最接近的位置。为使用 BF 组件建造一个悬架，我们建议使用一个在两端具有相反螺纹的连接单位（一个左旋一个右旋），使用六角棒车削获取。使用一个活动扳手在棒中央旋转，可以最好的方式调整设备中所有悬架的两个弹性组件之间的轴距。

MATERIALS

The external body is made of steel in the sizes 30, 55, 60 and 70, of light metal die cast in the sizes 40 and 50. The inner square is made of light alloy profile.

TREATMENTS

The external body is oven-painted while the inner square is covered with a RAL varnish.

DUTY

The BF oscillating element is generally used to realize circular or elliptic motion oscillating plants (gyratory sifters or plansifters) suspended or supported. You can install BF following two configurations: orthogonal axis for elliptic paths, and parallel axis for circular paths. In the suspended configuration, dynamic couples that could make the machine wave during operation, can be excluded by positioning the BF elements as close as possible to the centre of gravity. Suspensions with BF elements can be produced using a link unit whose ends must have opposite threads (one right-end and one left-hand) and obtained by drawing an hexagonal bar. With a monkey spanner, focusing on the middle of the bar, you can adjust at best the axle base between the two elastic components for all the plant suspensions.

构型 – 轨道种类

CONFIGURATION – TRAJECTORY TYPE

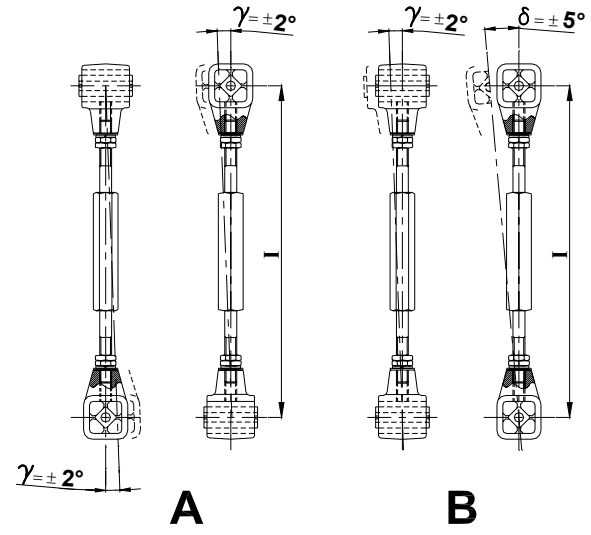

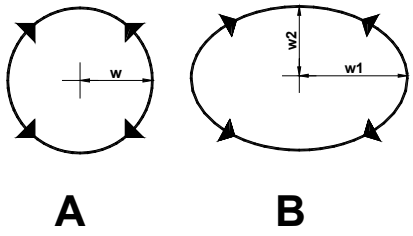

A: 圆型振动构型（正交轴）

B: 椭圆型振动构型（平行轴）

A: Configuration for circular oscillation (orthogonal axis)
B: Configuration for elliptic oscillation (parallel axis)

计算实例: 计算 BF 悬架的准确尺寸

CALCULATION EXAMPLE: *Determination of BF suspension correct size.*

起始数据 / *Given data*:

构型 “A” 圆型振动 (正交轴)
“A” configuration for circular oscillation (orthogonal axis)

γ: 正交振动半角: / *Halfangle orthogonal oscillation*: 2°

n: 电动机旋转速度: / *Motor rotation velocity*: 150 min^{-1}

w_1: 圆型振动半径: / *Circular oscillation radius*: 18 mm

G: 振动块重量: / *Oscillating mass weight*: 7000 N

X: 应使用悬架数目: / *Required suspension number:* 4

未知数据 / *Unknow data*:

Q_0: 每个悬架负载 / *Load for each suspension*

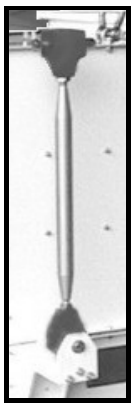

计算步骤 / *Calculation steps*:

l: 悬架最低轴距 / *Minimum distance between centres*

$$= \frac{w_1}{(\tan\gamma)} = \frac{18}{(\tan 2°)} = \frac{18}{35} = 514 \text{ mm}$$

Q_0: 总重量(G)除以悬架数目(X), 可得到悬架型号，即: / *The suspension type is obtained by dividing the total weight (G) by the number of mountings (X), so*:

$$= \frac{G}{X} = \frac{7000}{4} = 1750 \text{ N}$$

结论: 应使用 4 个悬架，每个由两个 **BF 40** 组件构成。

Conclusion: *It must be used 4 mountings, each comprising 2* ***BF 40*** *elements.*

VIB 弹性组件 型号: CR-P / *Elastic Components VIB Type: CR-P*

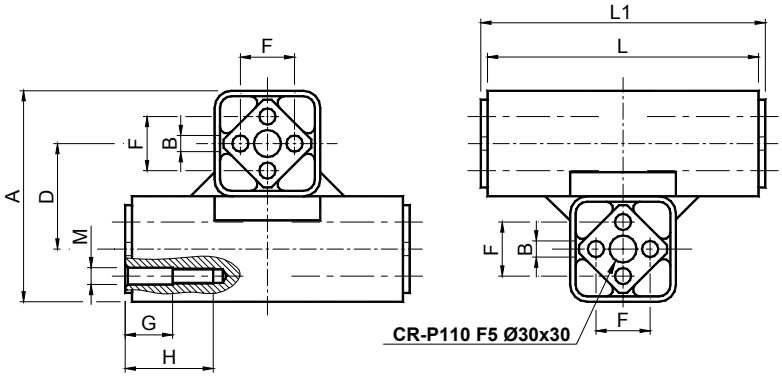

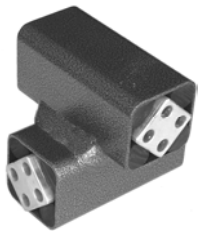

型号 *Type*	编号 N°	Q	n	A	B	D	F	G	H	M	L	L1	重量 *Weight* in kg
CR-P 20	**RE020802**	150	1150	54	5 $^{+0.5}_{+0.0}$	27	10 ±0.2	-	-	-	60	65	0.44
CR-P 30	**RE020804**	288	760	64	6 $^{+0.5}_{+0.0}$	32	12 ±0.3	-	-	-	80	85	0.65
CR-P 40	**RE020806**	750	760	90	8 $^{+0.5}_{+0.0}$	45	20 ±0.4	-	-	-	100	105	2.10
CR-P 50	**RE020808**	1550	760	120	10 $^{+0.5}_{+0.0}$	60	25 ±0.4	-	-	-	120	130	4.10
CR-P 60	**RE020810**	2800	560	144	12 $^{+0.5}_{+0.0}$	72	35 ±0.5	-	-	-	150	160	5.00
CR-P 70	**RE020812**	5350	385	156	M12	78	40 ±0.5	40	70	12.25	200	210	9.00
CR-P 80	**RE020814**	9550	280	200	M16	100	45	50	80	16.50	300	310	35.00
CR-P 100	**RE020818**	18950	145	272	M20	136	60	50	90	20.50	400	410	80.00
CR-P 110	**RE020820**	28900	92	340	M24	170	75	50	100	25	400	410	135.00
CR-P 110 F5	**RE020822**	38500	92	340	M24	170	75	50	100	25	500	510	160.00

Q: 每个悬架负载以 N 表示 / *Max loading in N per suspension*

n: 最高旋转次数以 min^{-1} 表示 角度为 β ≮10°从位置 0 波动≮ ±5° / *Max rotation velocity in min^{-1} at the max angle ≮10° from 0 ≮ ±5°.*

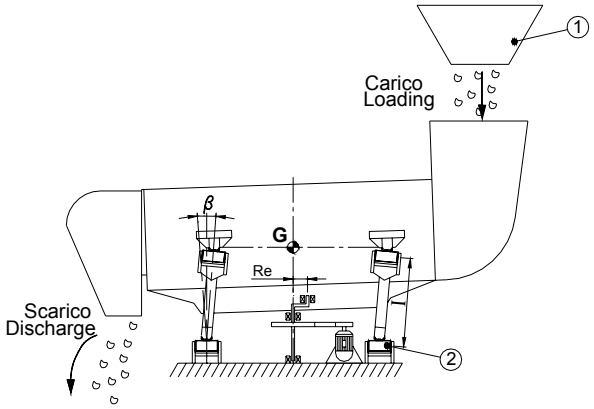

图例说明：

1: 装料漏斗 / *Load hopper*

2: VIB CR-P 型 / CR-P *Type*

I: 轴距 / *Distance between centres*

R_e: 偏心半径 / *Crank radius*

ß: 总工作角度: 10° (距 0 位置 ±5°)
Total angle working: 10° (*±5° from 0 position*)

G: 振动动力负载 / *Dynamic oscillating load*

材料

外壳为钢制。尺寸从 20 至 70，内部方管为铝制拉丝；尺寸从 80 至 110，内部方管为钢制。

处理

外壳为烤炉涂漆，内部方管由 RAL 烤漆覆盖。

应用

CR-P 振动组件主要应用于建造以圆型或椭圆型（平面筛）方式振动的悬挂或支撑设备。

为了避免在运动过程中产生的可能造成机器波动而不是平面运动的动力扭矩，上端 CR-P 弹性组件应尽可能安置在与机器重心平面的同一个表面。总振动角度 ß 不应超过 10°，这个角度取决于上端和下端接头的轴距。

MATERIALS

The external body is made of steel. The inner squares are made of light alloy profile from size 20 to 70, of steel from size 80 to 110.

TREATMENTS

The external body is oven-painted while the inner square is covered with a RAL varnish.

DUTY

The CR-P oscillating component is generally used to realize circular motion oscillating plants (plansifters) suspended or supported.
The onset of dynamic torques that could generate wavy rather than plane motion during the movement, can be excluded by aligning the upper CR-P elastic component as much as possible with the centre of gravity of the machine. The total oscillation angle ß should not exceed 10° and this angle depends on the axle base between the upper and lower joints.

计算实例: 计算 CR-P 悬架的准确尺寸

***CALCULATION EXAMPLE*:** *Determination of CR-P suspension correct size*

起始数据 / *Given data*:

G:	振动重量: *Oscillating weight*:	7000 N	**X:**	应使用悬架数目: *Required suspension number:*	4
n:	电动机旋转速度: *Motor rotation velocity:*	300 min^{-1}	**F_s:**	安全系数: *Safety factor:*	1.3 (仅用于支撑设备 / *Only for supported plants*)
R_e:	偏心块半径: *Eccentric radius*:	18 mm			

位置数据 / *Unknow data*:

Q_0: 每个悬架上的负载 / *Load on each suspension*

计算步骤 / *Calculation steps*:

I: 悬架最低轴距
Minimum distance between centres

$$= \frac{R_e}{(\tan\beta/2)} = \frac{18}{(\tan 5°)} = \frac{18}{0.09} = 200 \text{ mm}$$

Q_0: 悬架种类由总重量(G)乘以安全系数(F_s) 除以悬架数目而获得，即:
The suspension type is obtained by dividing the total weight (G)multiplied by the safety factor (F_s) by the number of mountings (X), so:

$$= \frac{G}{X} = \frac{7000 \cdot 1.3}{4} = 2275 \text{ N}$$

结论: 应使用 4 个悬架，每个由两个 CR-P 60 组件构成。

Conclusion: *It must be used 4 mountings, each comprising 2 pcs **CR-P 60** elements.*

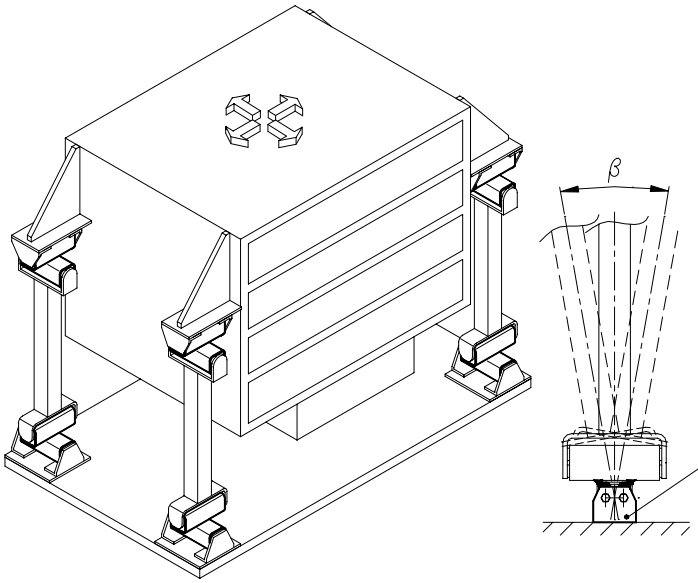

Staffa tipo SB
Support type SB

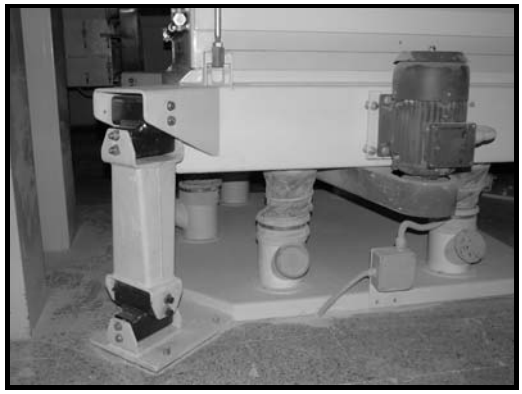

配件 / *ACCESSORIES*

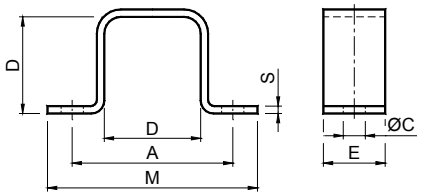

夹具 型号: **SR**
Clamp Type: ***SR***

型号 *Type*	编号 N°	A	C	D	E	M	S	重量 *Weight* in kg
SR 10	**RE020450**	37	6	20	20	50	2	0.04
SR 20	**RE020451**	50	7	27	25	65	2	0.05
SR 30	**RE020452**	60	9	32	30	80	2.5	0.11
SR 40	**RE020453**	80	11	45	35	105	3	0.18
SR 50	**RE020454**	100	13	60	40	125	4	0.31
SR 60	**RE020455**	115	13	72	45	145	5	0.49
SR 70	**RE020456**	130	18	78	50	170	6	0.71

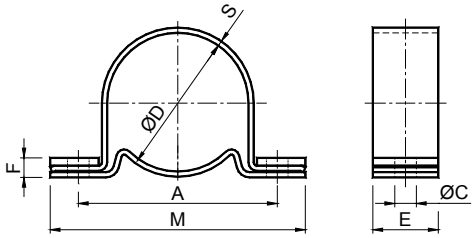

夹具 型号: **SC**
Clamp Type: ***SC***

型号 *Type*	编号 N°	A	C	D	E	F	M	S	重量 *Weight* in kg
SC 10	**RE020460**	45	6.5	28	20	6	60	1.5	0.05
SC 20	**RE020461**	55	6.5	36	25	7	75	2	0.11
SC 30	**RE020462**	68	8.5	45	30	8	90	2	0.16
SC 40	**RE020463**	92	10.5	62	35	10	125	2.5	0.31
SC 50	**RE020464**	115	12.5	80	40	11	150	3	0.48
SC 60	**RE020465**	130	12.5	95	45	13	165	3.5	0.72
SC 70	**RE020466**	152	16.5	108	50	15	195	4	0.96

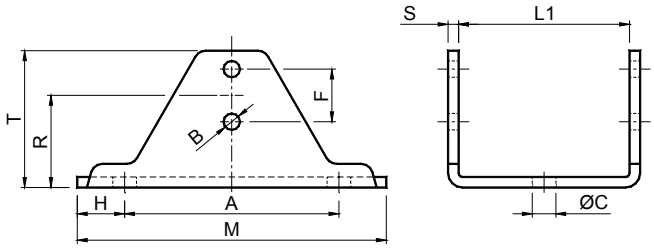

夹具 型号: **SY**
Clamp Type: ***SY***

型号 *Type*	编号 N°	A	B	C	F	H	L1	M	R	S	T	重量 *Weight* in kg
SY 20	**RE020501**	55	5.5	9.5	10	12.5	45	80	25	3	36	0.16
SY 30	**RE020502**	75	6.5	9.5	12	12.5	55	100	33	3.5	47	0.23
SY 40	**RE020503**	100	8.5	11.5	20	15	65	130	42	4	62	0.45
SY 50	**RE020504**	120	10.5	14	25	17.5	90	155	54	5	81	0.96
SY 60	**RE020505**	140	12.5	18	35	25	110	190	64	6	96	1.73

配件 / *ACCESSORIES*

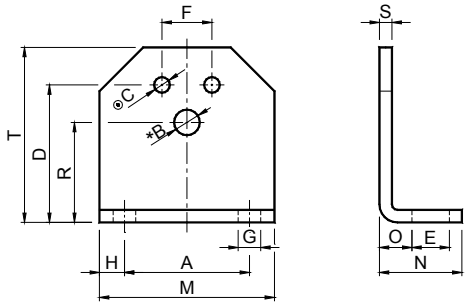

夹具 型号: **SB**

Support Type: ***SB***

型号 *Type*	编号 N°	A	*		⊙		D	E	F	G	H	M	N	O	R	S	T	重量 *Weight* in kg
			尺寸 *Size*	B	尺寸 *Size*	C												
SB 10	**RE020510**	30	10	6.5	20	5.5	35	13	10	7	7.5	45	30	11.5	27	4	46	0.09
SB 20	**RE020511**	40	20	8.5	30	6.5	44	13	12	7	7.5	55	32	13.5	34	5	58	0.17
SB 30	**RE020512**	50	30	10.5	40	8.5	55	15.5	20	9.5	10	70	38	16.5	43	6	74	0.29
SB 40	**RE020513**	65	40	12.5	50	10.5	75	21.5	25	11.5	12.5	90	52	21	57	8	98	0.72
SB 50	**RE020514**	80	50	16.5	60	12.5	85	24	35	14	15	110	55	21	66	8	116	0.93
SB 60	**RE020515**	100	60	20.5	70	12.5	110	30	40	18	20	140	66	26	80	10	140	1.82

***** 孔 **B** 用于以下各类 **CRESA** 张紧装置的安装: **RE**, **FE**, **BE**, **ME**, **CEA**, **CEB**

***** *The bore* ***B*** *is used for the fixation of the* ***CRESA*** *tensioners type:* ***RE, FE, BE, ME, CEA, CEB***

⊙ 孔 **C** 用于 **VIB** 各种"弹性组件"的安装: **AR-P**, **AC-P**, **AD-P**, **TB**, **CR-P**

⊙ *The bores* ***C*** *are used for the fixation of the* ***VIB*** *elastic components type:* ***AR-P, AC-P, AD-P, TB, CR-P***

VIB 弹性组件 压力垫型号: **PAR-T** / *Elastic Components* ***VIB*** *Pressure Pads Type:* ***PAR-T***

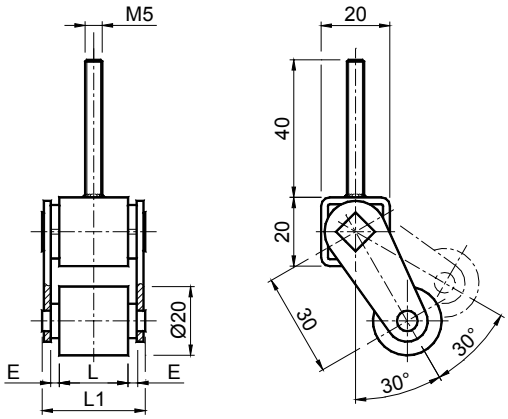

型号 *Type*	编号 N°	E	L	L1	Q	重量 *Weight* in kg
PAR-T 10 x 11	**RE020920**	2.5	11	21	85	0.08
PAR-T 10 x 16	**RE020922**	2.5	16	26	104	0.09
PAR-T 10 x 20	**RE020924**	2.5	20	30	130	0.10
PAR-T 10 x 25	**RE020926**	2.5	25	35	162	0.15

PAR-T 组件是配有橡胶空转轮的小型压力垫，尤其适用于保证所输送物品的导向和定位。主要应用于瓷业、大理石业和木业。通过将螺旋棒在主体上焊接，可在普通支撑上轻易地进行系列性安装。

The PAR-T components are small pressure elements provided with an idle rubber wheel, particularly useful for keeping objects in position during transports. They are mainly used in the sector of ceramics, marble and wood. They can easly be assembled in series on a common support by means of the threaded rod welded to the body.

振动电机 / *MOTORVIBRATORS*

根据振动机的种类及其应用，振动由以下方式产生：

- 一个偏心块的旋转 (旋转式振动) (图 1)
- 一个重量块的交替线性运动 (单向振动)。联合 2 个同样的方向相反旋转振动，产生单方向振动（图 2）。

According to the type of the vibrator and the different application, the vibrations are generated by:

- *the rotation of an eccentric mass (ROTATIONAL VIBRATION) (Fig. 1)*
- *the reciprocating linear movement of a mass (UNIDIRECTIONAL VIBRATION). The combination of two identical rotational vibrations and of opposite direction generates an unidirectional vibration. (Fig. 2)*

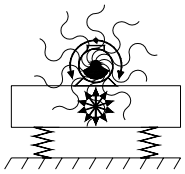

图 1

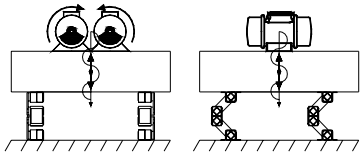

图 2

旋转式振动 / *ROTATIONAL VIBRATION*

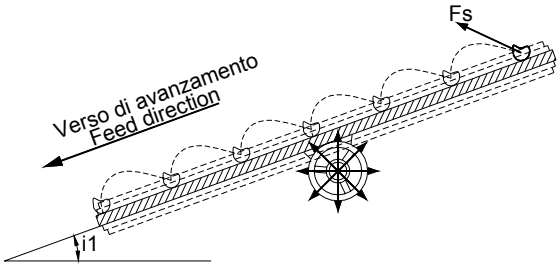

图例说明 / *Key*:

I_1: 滑槽倾斜角度 / *Angle of inclination of the chute*

F_s: 推动力 / *Thrust force*

V_a: 理论送料速度 / *Theoretical feed velocity* [cm/s]

V_{ac}: 修正理论送料速度 / *Corrected theoretical feed velocity* [cm/s]

V_{i1}: 滑动速度 / *Skidding velocity* [cm/s]

f_{i1}: 修正系数 / *Correction factor*

修正理论送料速度由此关系式获得 / *The corrected theoretical feed velocity is given by* : $V_{ac} = \frac{V_a + V_{i1}}{f_{i1}}$

V_{i1} 和 f_{i1} 可由此表获得:

V_{i1} and f_{i1} can be obtained by the following table:

倾斜 I_1 *Inclination I_1*	**V_{i1}**	**f_{i1}**	**倾斜 I_1** *Inclination I_1*	**V_{i1}**	**f_{i1}**
10°	80	0.81	25°	65	0.48
15°	75	0.71	30°	60	0.37
20°	70	0.60	35°	55	0.25

单方向振动 / ***UNIDIRECTIONAL VIBRATION***

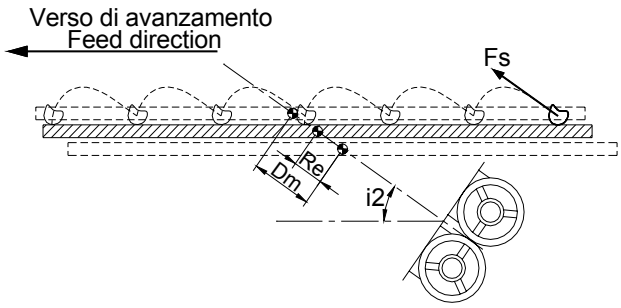

D_m: （峰与峰之间）最大振幅 / *Max amplitude* (peak to peak) = $2 \cdot R_e$

R_e: 偏心半径 / *Eccentric radius*

I_2: 振动电机倾斜角度 / *Motor vibrators inclination angle*

F_s: 推动力 / Thrust force

以相反方向旋转的两台振动电机可产生一项单方向的振动，在物料上施与一项推动力 Fs，就不同种类的物料（尺寸、形状和黏性）和振动机的倾斜角度，向材料给予一条抛物线形轨道。

The rotation of two motor vibrators that are turning in opposite direction, permits to create an unidirectional vibration. This vibration gives to the material a thrust force Fs that permits at the material to draw a parabolic trajectory, according

倾斜角度 i_2 *Inclination Angle i_2*	***应用 / Application***
6°-12°	特殊分离机 / *Special separators*
25°-30°	运输、分离、食品、定向和分类 / *Transports, extractions, alimentary, orientation and classification*
31°-45°	筛选、校准和分离 / *Screening, gauging and separation*
45°-80°	流化床 (干燥剂) / *Fluid beds (dryers)*

实例 / *Examples:*

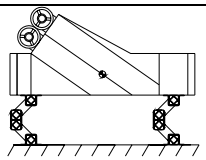

上端安置型的振动筛或振动台

Vibrating screen or table with upper positioning

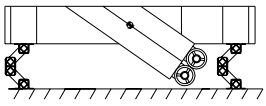

下端安置型的振动筛或振动台

Vibrating screen or table with lower positioning

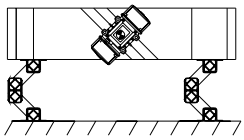

侧面安置型的振动筛或振动台

Vibrating screen or table with positioning on the sides

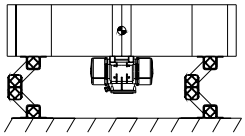

压实机 / *Compacting machine*

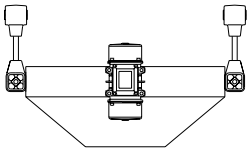

筒仓提取器/ *Silos extractor*

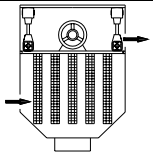

空气过滤器清洁 / *Cleaning of air filters*

抗震支撑 / *ANTI-DUMPING SUPPORTS*

一般而言，在机器内部，由系统（比如电机）运动所产生的振动是有害的，因为振动的未受控制的传播可造成许多功能失调，例 如：元件的过早磨损、结构变形、及在使用过程中机器的移动。除了这些机械方面的问题，振动也可对在机器设备附近的操作人员造成危害，因为如果受具危害性的频率波区影响，可能给他造成身体不适：

- 1-2 Hz: 轻; 2-20 Hz: 中; 0-1000 Hz: 高。

因此有必要应用有助于解决建造难题并保证操作人员身体健康的适当的技术。在系统固有频率比对它激励的频率低的条件下，可将振动隔离。为了降低系统的固有频率，应在重量 (M)或弹性 (E_d)上想办法; 这一点可通过钢弹簧做到（图 1），但是效果不理想；或者使用 VIB 抗震支撑（图 2）做到。由于特定的橡胶，可作为对于这些用途是最适合和可靠的产品。

为了提高抗震支撑的效能，应在须隔离的设备负载下具变形的可能性，同时保证其坚硬性和易弯曲性之间的平衡。因为若支撑过于坚硬， 不可能传播振动；若支撑过于易弯，可能造成对机器的过分振动。VIB 支撑保证对机器自身产生的振动的吸收，但尤其适用于将装备（比如说一台测量仪器）所受的周围环境的振动进行隔离。VIB 弹性组件利用自然橡胶内置物的可变弹性，可保证减低所存在的有害振动，将重量块的波动能量转化为热量。

Generally, inside the machines, the vibrations coming from moving parts (example: motor) are considered harmful because the uncontrolled propagation of the oscillations can generate many unpleasant functional failures such as: early wear of components, deformation of the metal structure and machine traverse while in operation. Furthermore, vibrations can also affect physically the operator near the machine anytime he/she is within the range of noising frequencies:

- *1-2 Hz: light; 2-20 Hz: medium; 20-1000 Hz: high.*

Therefore, suitable technical applications are essential in order to find a solution to design problems and to protect workers. Vibrations are damped each time the system natural frequency is lower than its excitation frequency. The mass (M) or the elasticity (E_d) have an impact and can lower the natural frequency of the system. This can be obtained by means of steel springs (Fig. 1) but with scarce results or with VIB anti-damping supports (Fig. 2) made of special rubber and fot this reason ideal for this application.
Anti-damping supports are working efficiently whenever they can be deformed by the load of the plant which needs to be insulated thus maintaining proper balance between stiffness and looseness: when the support is too rigid it cannot hinder the propagation of vibrations, but when too loose, the machine would oscillate excessivly. VIB supports can absorb the vibrations of the machine but are also ideal to insulate the plant (example: a measuring device) from vibrations coming from the surrounding environment. VIB elastic components take advantage of the elastic deformation of the natural rubber inserts and damp harmful vibrations transforming the energy transmitted by the wavy movements of the masses into heat.

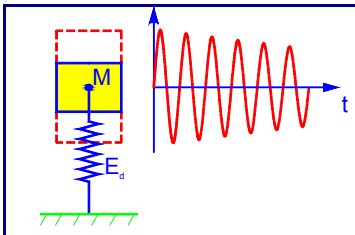

钢弹簧 ➔ 不适合 (低阻尼)

Steel spring ➔ Not very suitable (low damping)

图 1

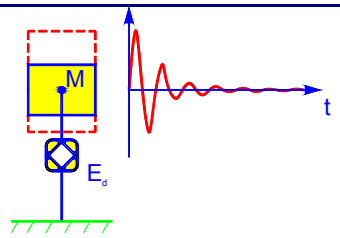

橡胶弹簧 ➔ 适合 (高阻尼)

Rubber spring ➔ Suitable (high damping)

图 2

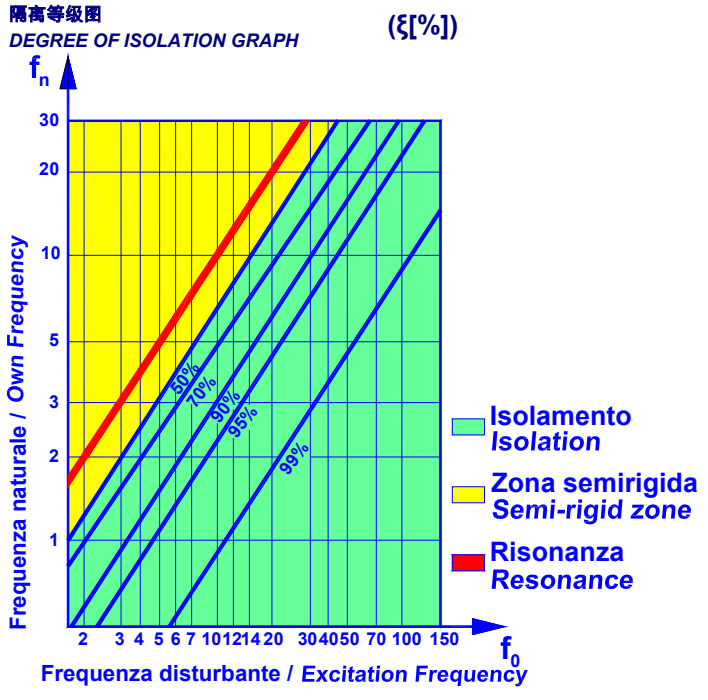

图 3

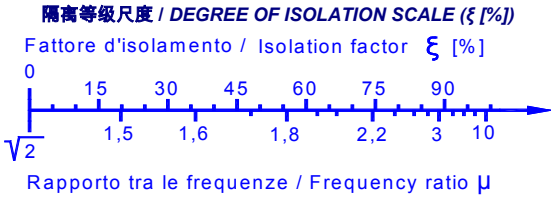

图 4

图例说明 / *Key*:

f_0: 进入系统的频率（激励）[Hz]
Entrance frequency in the system (excitation) [Hz]
f_n: 系统固有频率 [Hz] / *own system frequency [Hz]*

μ: 频率比 / *frequency ratio* = $\frac{f_0}{f_n}$

ξ: 隔离系数 / *Isolation factor* [%]

振动种类 / *VIBRATION TYPE*

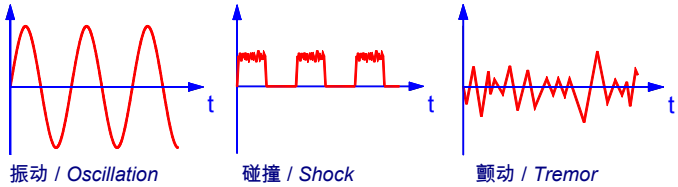

图 5

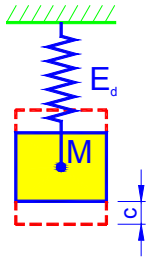

图例说明 / *Key*:

E_d: 弹性 / *Spring value*

M: 重量 / *Mass*

c: 变形量 [cm] / *Set [cm]*

f_0: 固有频率 / *Own frequency*

图 6 (振动种类 *Oscillation type*: 图 1)

固有频率的计算 (钢机械弹簧) /

为了计算由具弹性 E_d 的弹簧和与其所连的重量块 M 所组成的系统的固有频率，应找到在拉力仅为其自身重量的变形量 c。因此此系统在放松后，将以其固有频率振动 $f_n = \frac{1}{2\pi}\sqrt{\frac{g}{c}} = \frac{5}{\sqrt{c}}$ [Hz]

uguale a $f_n = \frac{300}{\sqrt{c}}$ [min^{-1}]

OWN FREQUENCY CALCULATION (mechanical steel spring)

To calculate the natural frequency of a system consisting of a spring with elasticity E_d and a mass M connected to it, find the set c under the action of the weight force alone. The system left free will oscillate following its own natural frequency $f_n = \frac{1}{2\pi}\sqrt{\frac{g}{c}} = \frac{5}{\sqrt{c}}$ equal to $f_n = \frac{300}{\sqrt{c}}$ [min^{-1}]

计算实例/ *Calculation example*:

起始数据 / Given data: c = 3 cm $f_n = \frac{300}{\sqrt{c}} = \frac{300}{\sqrt{3}} = 173\ min^{-1}$

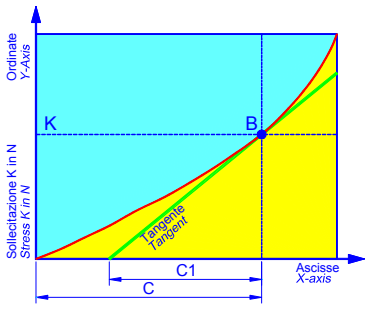

图 7 (振动种类: 图 2 / *Oscillation type: Fig. 2*)

固有频率计算 (橡胶弹簧)

橡胶弹簧具有非线性的变形。为了计算其固有频率，因在负载曲线 B 点划切线 (图 7) 获得变形量 c_1 值，在此点在 VIB 组件上受到应力 K [N]。为了计算系统固有频率，应使用如下关系式:

$f_n = \frac{1}{2\pi}\sqrt{\frac{g}{c_1}} = \frac{5}{\sqrt{c_1}}$ [Hz] 等于 $f_n = \frac{300}{\sqrt{c_1}}$ [min^{-1}]

在选择正确的抗震支撑时，应注意系统固有频率 f_n 与进入频率 (激励) 不同时发生，否则在极为显著的振动幅度会进入共振区。

OWN FREQUENCY (rubber spring)

The rubber spring have a non-linear deformation. To calculate their natural frequency, you should obtain the value of the arrow c_1 by drawing the tangent of the loading curve (fig 6) at point B in which a stress K [N] is overloading the VIB element. You should use the formula $f_n = \frac{1}{2\pi}\sqrt{\frac{g}{c_1}} = \frac{5}{\sqrt{c_1}}$ equal to $f_n = \frac{300}{\sqrt{c_1}}$ [min^{-1}] in order to calculate the natural frequency of the system.

When choosing the correct anti-damping support, make sure that the natural frequency f_n of the system does not coincide with the input frequency (excitation) f_0 because this would involve the field of resonance with a remarkable increase in the oscillation amplitudes.

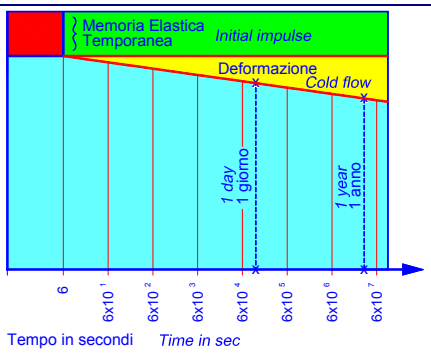

图 8

橡胶的长期变形

左图表示 VIB 产品中所使用的橡胶在长期使用过程中的变形。操作范围为±30°扭转角度，变形负荷在专门的列表中显示。由此图可见在一天中的变形比一整年工作变形的一半稍多。与静止位置相比，用于我们产品中的橡胶的不回返角度在 3°至 5°范围内。

LONG-TERM DEFORMATION OF THE RUBBER

The graph to the side represents the deformation of the rubber of the VIB elements during the passing of time. The field of work varies from a rotation of ±30° and the deforming load is as illustrated in the tables. The deformation of one day is only slightly more than half of one full year of work. The non-return memory of the worn rubber used for our articles ranges from 3° to 5° compared to their rest position.

一旦确定须使用 VIB 支撑的型号或数目后，有必要将抗震装置正确地安装在机器上。为了完成这项操作应了解机器重心的位置，因为，在安装时，保证每个支撑都承受同样的负载。如有可能，有必要将在支撑上重心所施的力矩抵消。在不可能将抗震支撑在机器重心两边对称安装的情况下，应如图 9 所示计算在每个支撑上的负载；如果有必要，放置一些适当的压力垫而抵消每个支撑之间的高度差。

Once the type and number of VIB supports for use have been determined, the anti-damping elements should be correctly positioned on the machines. This important operation can be accomplished only after the centre of gravity of the machine has been defined because the positioning of the supports must be such as to guarantee that each of them is charged with the same load. Should it be impossible to set the anti-damping supports in a way as to ensure that the centre of gravity of the machine is asymmetrical to them, the loads of each support must be calculated as described in fig 9 and if necessary, position the appropriate wedges in order to eliminate any differences in height among the various supports.

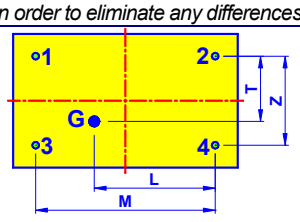

图例说明 / *Key*:

1-4: VIB Y 型或 AN 型抗震支撑安置
VIB type Y or AN support positioning

G: 在重心上负担的机器总重量 [N]
Total weight of the machine burdening the centre of gravity [N]

图 9

计算步骤 / Calculation steps:

支撑上的负载 *Load on the support* **1** $= G \cdot \frac{L}{M} \cdot \frac{Z-T}{Z}$ [N]

支撑上的负载 *Load on the support* **2** $= G \cdot \frac{M-L}{M} \cdot \frac{Z-T}{Z}$ [N]

支撑上的负载 *Load on the support* **3** $= G \cdot \frac{L}{M} \cdot \frac{T}{Z}$ [N]

支撑上的负载 *Load on the support* **4** $= G \cdot \frac{M-L}{M} \cdot \frac{T}{Z}$ [N]

应用实例 - *APPLICATION EXAMPLES*

压缩机减震器 *Shock absorber for compressors* 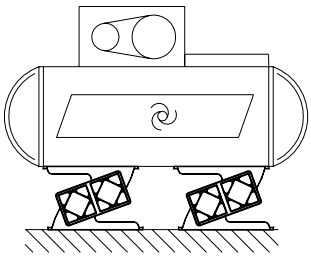 1	测量仪器防振 *Measuring instrument insulation* 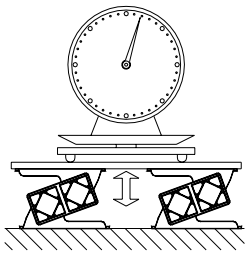 2	自动洗车刷悬架 *Suspension for car brush* 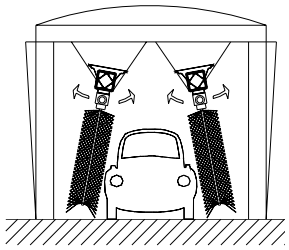 3
水洗机用悬架 *Suspension for the scrubbing machines* 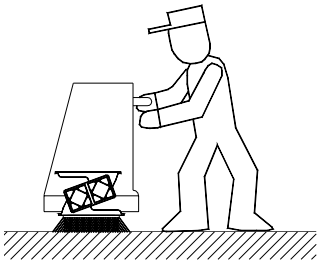 4	导向指导 *Guide rail* 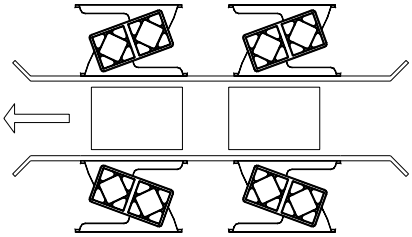 5	高卡车或小型汽车座椅用悬架 *Suspension for go-kart seats* 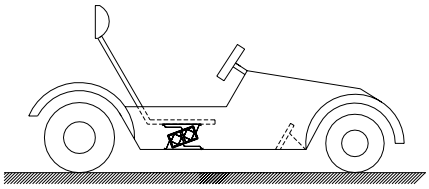 6
气锤防振 *Pneumatic hammer insulation* 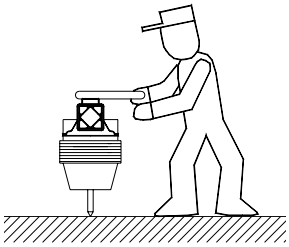 7	起重机轨用悬架 *Suspension for crane rail* 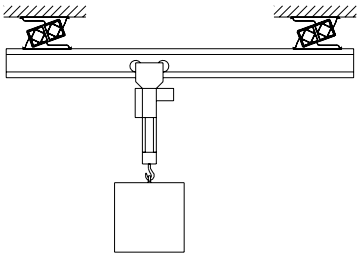 8	摇动玩具弹性接头 *Elastic joint for rocking horse* 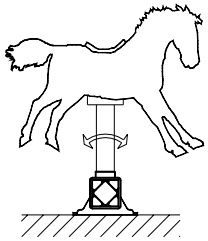 9
收割机用悬架 *Picker suspension* 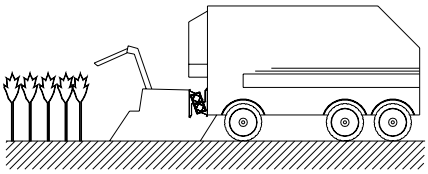 10	高速公路收费站和电梯导向减震装置 *Shock absorber guide for tollgates and lifts* 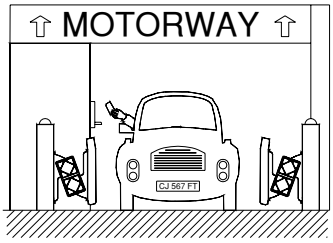 11	电子线路绝缘 *Control unit insulation* 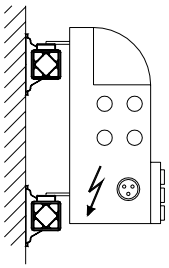 12
轻便梯用悬架 *Suspension for rung ladder* 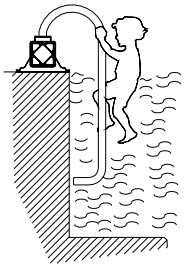 13	卡车冷却压缩机用悬架 *Suspension for cooling compressors on trucks* 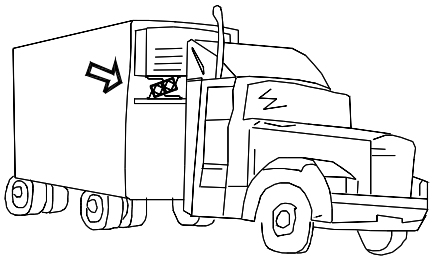 14	缓冲器 *Bumper* 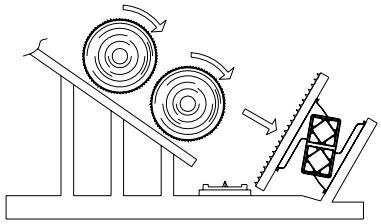 15

VIB 弹性组件 型号: Y / *Elastic Components VIB Type: Y*

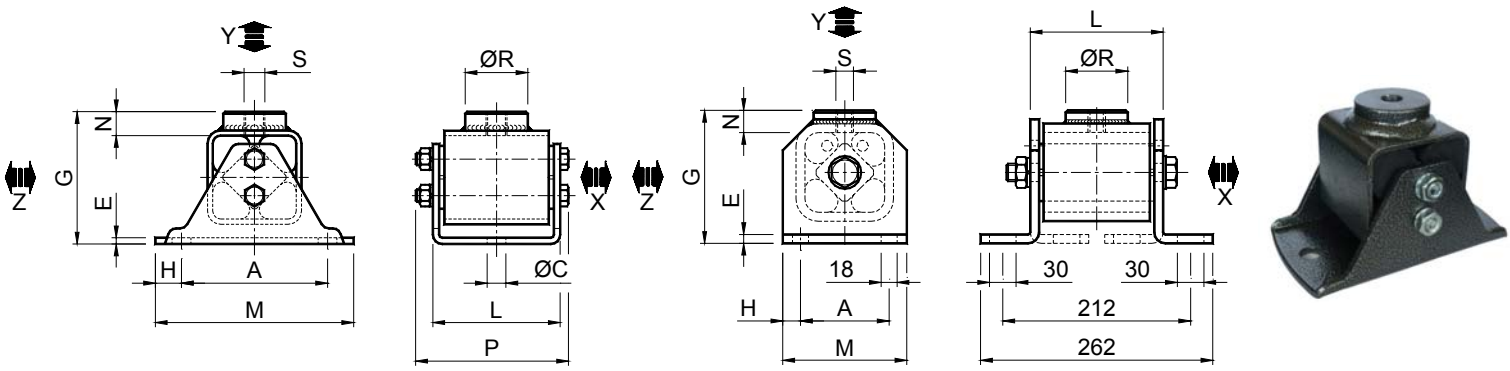

尺寸 70 / *SIZE 70*

型号 *Type*	编号 N°	Q	A	C	E	G	H	L	M	N	P	R	S	重量 *Weight* in kg
Y 20	**RE020552**	0 - 750	55	9.5	3	49	12.5	51	80	10	58.5	20	M10	0.35
Y 30	**RE020554**	580 - 1515	75	9.5	3.5	66	12.5	62	100	13	74	30	M10	0.80
Y 40	**RE020556**	1230 - 2860	100	11.5	4	84	15	73	130	14.5	85.3	40	M12	1.40
Y 50	**RE020558**	2480 - 4750	120	14	5	105	17.5	100	155	17.5	117	45	M16	2.70
Y 60	**RE020560**	4280 - 7560	140	18	6	127	25	122	190	22.5	148	60	M20	4.90
Y 70	**RE020562**	5700 - 11400	100	/	10	150	20	150	140	25	262	70	M20	8.00

Q: 在 Y 轴和 Z 轴上的负载，以 N 表示 / *Max loading in N on Y and Z axis*

在 X 轴上可允许最大负载为 Y 轴和 Z 轴上负载的 10%

The maximum allowable load on X axis is 10% greater than that of the Y and Z axis

可允许在 Y 轴和 Z 轴上直至 2.5 g 的短期最高负载

Maximum loads of short duration up to 2,5 g on Y and Z axis are allowed.

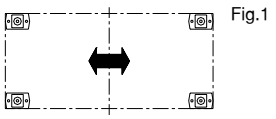
Fig.1

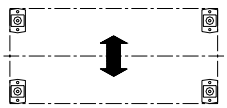
Fig.2

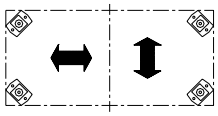
Fig.3

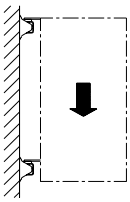
Fig.4

图 1: 纵向动力 / *Longitudinal dynamic forces*

图 2: 横向动力 / *Transversal dynamic forces*

图 3: 未确定动力 / *Indeterminate dynamic forces*

图 4: 墙体安装 / *Wall fitting*

材料

支撑的主体和夹具为钢制，内部方管为铝制拉丝。

处理

外壳和夹具为烤炉涂漆，内部方管由 RAL 烤漆覆盖。

应用

弹性组件 Y 一般应用于削减由压缩机、风扇、泵、发电机、滤网、筛子、振动机等机动化装置所产生的振动。

弹性组件 Y 可用于地面支撑也可用于天花板或墙壁悬架。

MATERIALS

The body and the supporting bracket are made of steel, while the inner square is made of light alloy profile.

TREATMENTS

The external body and the supporting bracket is oven-painted while the inner square is covered by a RAL varnish.

DUTY

The elastic components Y are mainly used for dumping vibrations due to the motors of fans, compressors, grinders, pumps, generators, screens, mills etc.

The elastic components Y can be used as ground supports or ceiling and wall mountings.

负载图 / *LOAD GRAPH*

(**Q**: 垂直压缩负载 [N]; **c**: 变形量 [mm]; $\mathbf{f_n}$: 固有频率 [Hz])

(***Q**: Vertical compression load [N]; **c**: Set [mm]; $\mathbf{f_n}$: Own frequency [Hz])*

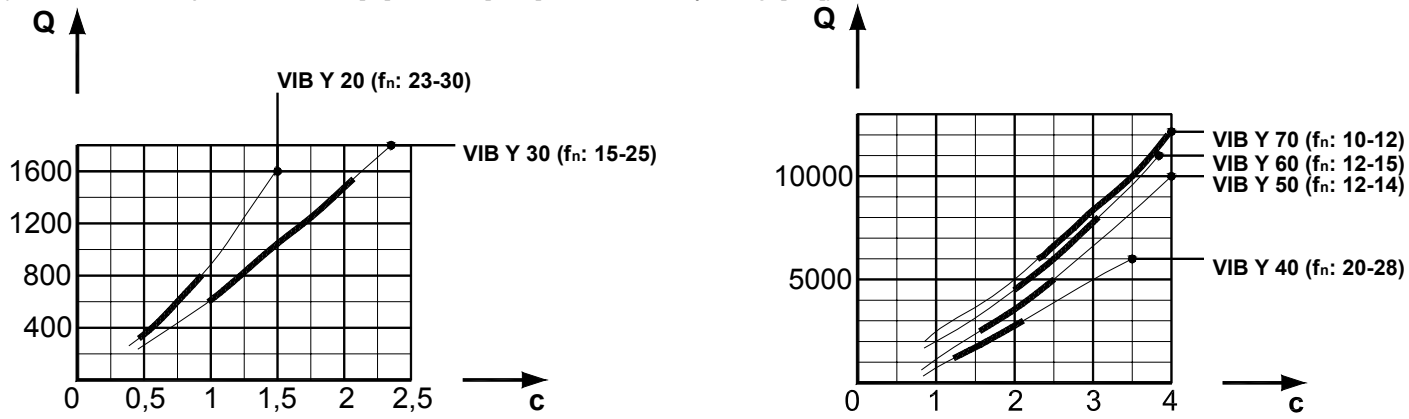

计算实例: 重心在机器中部，应力和负载主要为垂直方向的压缩机所用的抗震支撑 Y 的计算

***CALCULATION EXAMPLE**: Determination of an anti-vibration support type Y for a compressor with verticals forces and loadings with the centre of gravity in the median point of the machine.*

起始数据 / *Given data*:

n: 电动机旋转速度: *Motor rotation velocity:* 2840 min^{-1} **X**: 支撑数目： *Mounting number:* 4

G: 重量: *Weight*: 10800 N

Incognite / *Unknow data*:

Q_0: 每个悬架的负载 / *Load for each suspension*

计算步骤 / *Calculation steps*:

Q_0: 每个悬架的静负载 *Static load for each suspension*: $= \frac{G}{X} = \frac{10800}{4} = 2700\,N$

所得负载 Q_0 允许一并使用 Y 40 和 Y 50.

The founded load Q_0 allows of using both Y 40 and Y 50 type.

计算激励频率: $\mathbf{f_O}$

It must be calculated the excitation frequency: $\mathbf{f_O}$

$\mathbf{f_0}$: $\frac{n}{60} = \frac{2840}{60} = 47{,}3\,Hz$

在 2700 N 下 **Y 40** 固有频率 $\mathbf{f_n}$: (约)22 Hz / ***Y 40** own frequency $\mathbf{f_n}$ at 2700 N: 22 Hz (about)*

在 2700 N 下 **Y 50** 固有频率 $\mathbf{f_n}$: (约)13 Hz / ***Y 50** own frequency $\mathbf{f_n}$ at 2700 N: 12 Hz (about)*

μ: 由第 68 页图 3 和图 4 所得的隔离程度:
Degree of isolation given by fig 3 and 4 at page 68:

- **Y 40:**大约 70-80% / 70-80% about for **Y 40** Type
- **Y 50:**大约 90-95% / 90-95% about for **Y 50** Type

结论: 为了尽可能削减由压缩机电机所引起的振动，建议使用 4 个 **Y 50** 抗震支撑。

***Conclusion:** It is recommended to use 4 supports anti-vibration **Y 50** to damping the vibrations given by the compressor motor.*

VIB 弹性组件 型号: AN / *Elastic Components VIB Type: AN*

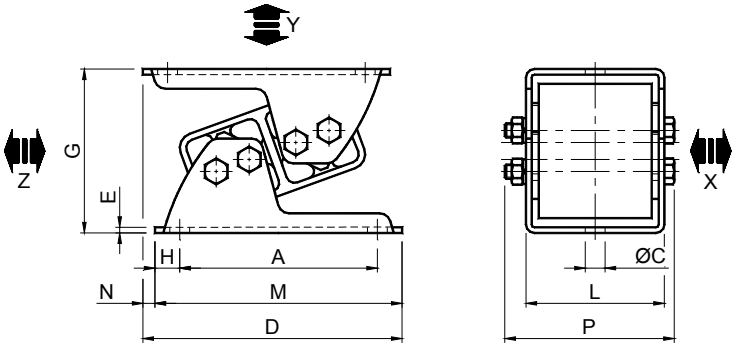

型号 *Type*	编号 N°	Q	A	C	D	E	G	G1	H	L	M	N	P	重量 *Weight* in kg
AN 20	**RE020832**	0 - 375	65	7	90.5	2	54	44	10	49	85	5.5	58.5	0.40
AN 30	**RE020834**	290 - 1145	80	9.5	110.5	2.5	65	52	12.5	60	105	5.5	69	0.65
AN 40	**RE020836**	960 - 1940	110	11.5	148	3	88	72	15	71	140	8	85.5	1.32
AN 50	**RE020838**	1750 - 3300	140	14	182	4	117	93	17.5	98	175	7	117	3.70
AN 60	**RE020840**	3000 - 5740	170	18	234.5	5	143	115	25	120	220	14.5	138	5.50
AN 70	**RE020842**	5230 - 8560	175	18	240	6	165	134	25	142	225	15	163	11.00

Q: 在 Y 轴和 Z 轴上负载，以 N 表示 / *Max loading in N on Y and Z axis*

在 X 轴上可允许最大负载为 Y 轴上负载的 20%

The maximum allowable load on X axis is 20% greater than that of the Y axis

Fig.1

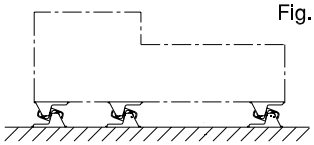

Fig.2

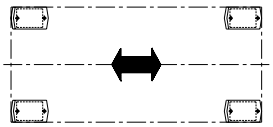

Fig.3

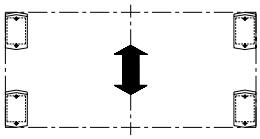

Fig.4

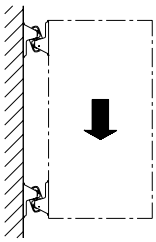

图 1: 安置 / *Positioning*

图 2: 纵向动力 / *Longitudinal dynamic forces*

图 3: 横向动力 / *Transversal dynamic forces*

图 4: 墙面安装 / *Wall mounting*

材料

尺寸从 30 至 60，夹具为钢制，双中心体和内部方管为铝制拉丝；尺寸为 70，双中心体和夹具为钢制，内部方管为铝制拉丝。

处理

双体和夹具外壳为烤炉涂漆。

应用

弹性组件 AN 一般应用于低等和中等频率振动的吸收：旋转组件、制冷设备电机、压缩机、泵、搅拌机，也可用磅秤、电子线路、缓冲器等的支撑。

弹性组件 AN 可用于地面支撑也可用于天花板或墙壁悬挂。为了保证正确效能，所有弹性组件 An 均应以同一方向固定。

MATERIALS

From size 30 to 60 clamps are made of steel while double inner body and inner squares are made out of light alloy profile. Size 70: double body and clamps are made of steel while inner squares are made out of light alloy profile.

TREATMENTS

Double body and clamps are oven painted.

DUTY

The elastic components AN are mainly used to damping vibration of low and medium frequency: rotating components, refrigerant motor unit, compressors, pumps, mixing machine, but also as supports for measuring systems, eletric distribution board, impact damper etc.

The elastic components AN can be used as ground supports or ceiling and wall mountings. For a correct operation in series, the shock absorbing elements AN must all be fixed in the same direction.

负载图 / *LOAD GRAPH*

(**Q**: 垂直压缩负载 [N]; **c**: 变形量 [mm]; **f_n**: 固有频率 [Hz])
(***Q**: Vertical compression load [N]; **c**: Set [mm]; **f_n**: Own frequency [Hz])*

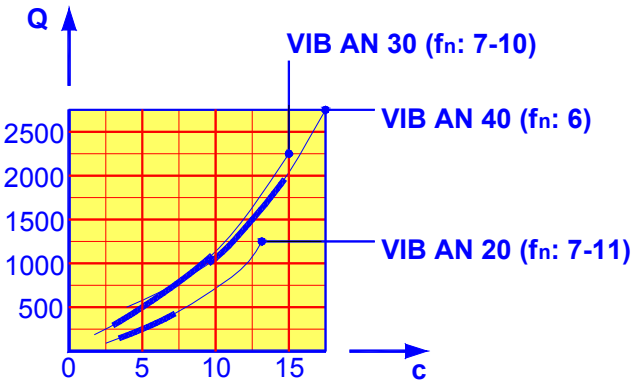

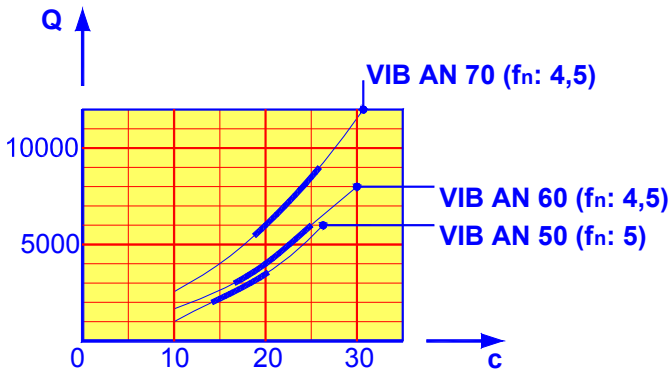

计算实例: 剧院设备起重机所用抗震支撑 AN 的计算，应力和负载主要为垂直方向，重心在机器中部。

***CALCULATION EXAMPLE**: Determination of an anti-vibration support type AN for a theatrical equipment lift with verticals forces and loadings with the centre of gravity in the median point of the machine.*

起始数据 / *Given data*:

n: 电动机旋转速度: / *Motor rotation velocity:* 3550 min^{-1} **X**: 支撑数目: / *Mounting number:* 6

G: 重量: / *Weight*: 27600 N

Incognite / *Unknow data*:

Q_0: 每个悬架的负载 / *Load for each support*

计算步骤 / *Calculation steps*:

Q_0: 每个悬架的静负载: / *Static load for each suspension*: $= \frac{G}{X} = \frac{27600}{4} = 4600\ N$

应使用 **VIB AN 60**
*It must be used **VIB AN 60***

计算激励频率 **f_O**
It must be calculated the excitation frequency: **f_O**
f_0: $\frac{n}{60} = \frac{3550}{60} = 59.2\ Hz$

AN 60 的固有频率 **f_n**
***AN 60** own frequency **f_n**:* 4.5 Hz

μ: 由第 68 页图 3 和图 4 所得的隔离程度:
Degree of isolation given by fig 3 and 4 at page 68:

- 约 99% / *about* 99%

结论: 应使用 6 个 **AN 60**
Conclusion:** It must be used 6 pieces **AN 60

一般销售条件：

1) **订货** – 标准材料或特殊材料的订货应始终根据TECNIDEA CIDUE S.r.l. 公司的报价作出。所有的订货对客户都是有约束力的。加工生产一旦开始，便不可接受取消订货或减少订货，除非客户一方赔偿直至中止时刻所使用的材料和加工费用。无论如何，这些费用将由 TECNIDEA CIDUE S.r.l.公司决定。

2) **价格** – 意指在订货日期有效的价格。所有的价格均为维罗纳交货价计价，包装费除外。如果在供应工程中出现材料费或其他生产费用的增长情况，TECNIDEA CIDUE S.r.l.公司有权根据相应的增长修正价格，这一点也包括已在进行过程中的订货。

3) **交货期限** – 唯有TECNIDEA CIDUE S.r.l.公司所指定的交货期限为有效期限。无论如何，此期限只是具有说明意义的。若存在材料供应困难和罢工的情况，或者在任何不可抗力的情况下，交货期限将自动延期，TECNIDEA CIDUE S.r.l.公司没有义务赔偿任何可能的相关损失。材料准备完毕，客户在任何情况下有义务提取所订的材料。

4) **运输** – 运输费由订货方负担，即使是到岸计价，风险和危险也由其承担。就可能发生的短装货投诉应在接收货物后8天内提出。如果经商议，运输费由TECNIDEA CIDUE S.r.l.公司负担，或者仅是部分负担，公司保留可选择最经济的运输方式的权利。

5) **包装** – 包装费在费用价格中计算。

6) **退货** – 如果未经事先批准或有包装费，不接受具任何理由的退货，可能存在的海关手续费及退货完全由买方负担。仓库存放或管理费用保证金的将以退货价值的15%计算并通过欠款通知账单的方式而发放。

7) **质量保证** – TECNIDEA CIDUE S.r.l.公司将致力于免费修理或更换由其认定有缺陷的部件。有争议的货物应交还TECNIDEA CIDUE S.r.l.公司所在地，所有费用均免。在将有缺陷的部件修理或拆开复原后，保质期到期。由买方对有缺陷的部件进行的修理仅在 TECNIDEA CIDUE S.r.l. 公司批准并同意费用预定价的情况下得到承认。
TECNIDEA CIDUE S.r.l.公司对在用户使用其产品，包括有缺陷产品的过程中所造成的损害不负任何责任，也不偿付任何相关的赔款。

8) **责任** - TECNIDEA CIDUE S.r.l.公司对在用户使用其产品，包括由缺陷产品的过程中所造成的损害不负任何责任，也不偿付任何相关的赔款。TECNIDEA CIDUE S.r.l.公司按照从属客户提出的特殊细节制造产品，但是对此产品是否由专利保护不负任何责任。

9) **付款** – 只有在所商议的方式和期限内所做的付款被认为有效。在付款期过后，TECNIDEA CIDUE S.r.l.公司有权要求付款，并将以超过法定税率以上3%的税率计算罚款利息。在订货方延迟付款或不付款的情况下，TECNIDEA CIDUE S.r.l.公司有权中断在进行过程中的订货的送交或者提出提前付款的要求，无需向订货方保证任何的赔款或赔偿。在生产过程中或材料已由订货方拥有，对材料提出的任何争议不解除订货方在确定期限内付款的义务，应付全部款项并不可要求任何的折扣。

10) **财产** – 在就发票额完全支付款项之前，一切寄出的货物仍为TECNIDEA CIDUE S.r.l.公司的财产。

11) **主管法院** – 与TECNIDEA CIDUE S.r.l.商业关系相联的任何争议将为维罗纳法院的权限。

N.B. Fa fede la versione in Italiano o Inglese.
注：所有的文件以意大利文或英文版为准。

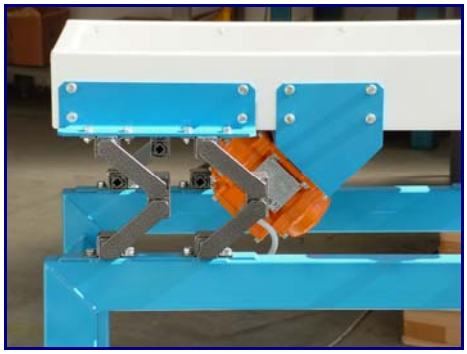

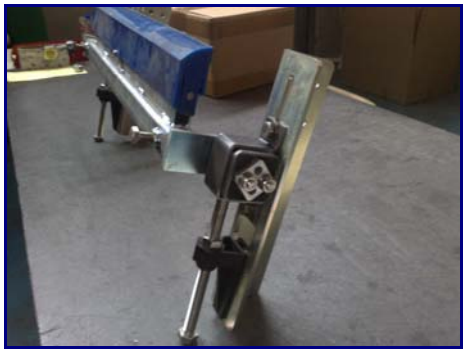

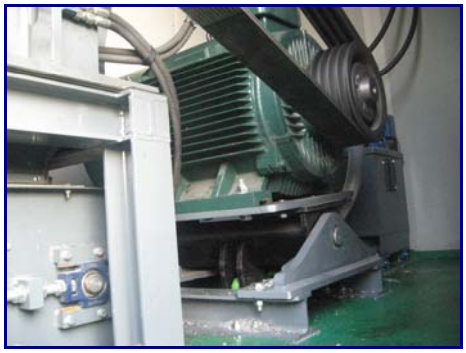
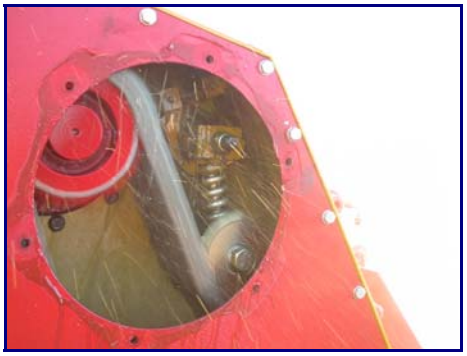
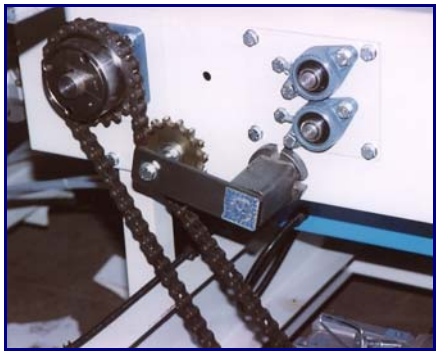

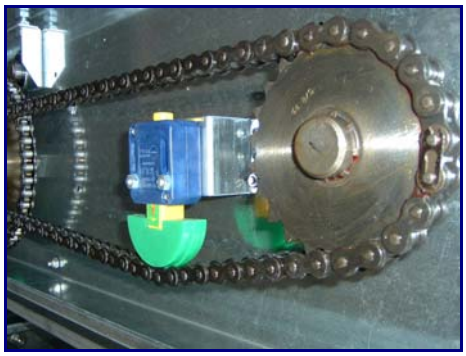

Tecnidea Cidue srl 敬告这些数据不是绝对严格，公司有权不经过事先通知，根据为改善产品质量的适当的需求而进行变更。
Customers are advised that the data given here may change. Tecnidea Cidue srl reserves the right to alter the nature of its product to suit new requirements and improve quality without forewarning clients.

TC2

Volume 1

TECNIDEA CIDUE S.r.l.
Via Apollo XI, 12 (trav. Via Cavrara)
37057 S. Giovanni Lupatoto – Verona – Italy
tel. 0039 (0)45 8750250 – fax 0039 (0)45 8750288
www.tecnideacidue.com
e-mail: sales@tecnideacidue.com

as ideas ideas ideas

Tecnidea Cidue Worldwide

Austria – Belgium – Bulgaria – Czech republic – Denmark
Finland – France – Germany – Greece – Hungary
Ireland – Italy – Latvia – Lithuania – Malta – Netherlands
Norway – Poland – Portugal – Romania – Slovakia
Slovenia – Spain – Sweden – Switzerland – Ukraine
United Kingdom – Argentina – Australia – Brasil
Canada – China – Chile – India – Indonesia – Iran – Israel
Japan – Jordan – South Korea – Mexico – New Zeeland
Peru – Philippines – Russia – Singapore – Taiwan
Thailand – Tunisia – Turkey – U.S.A.

CERTIFIED QUALITY MANAGEMENT SYSTEM ISO 9001:2008
SINCERT DNV