Xiang Jia

祥嘉传动

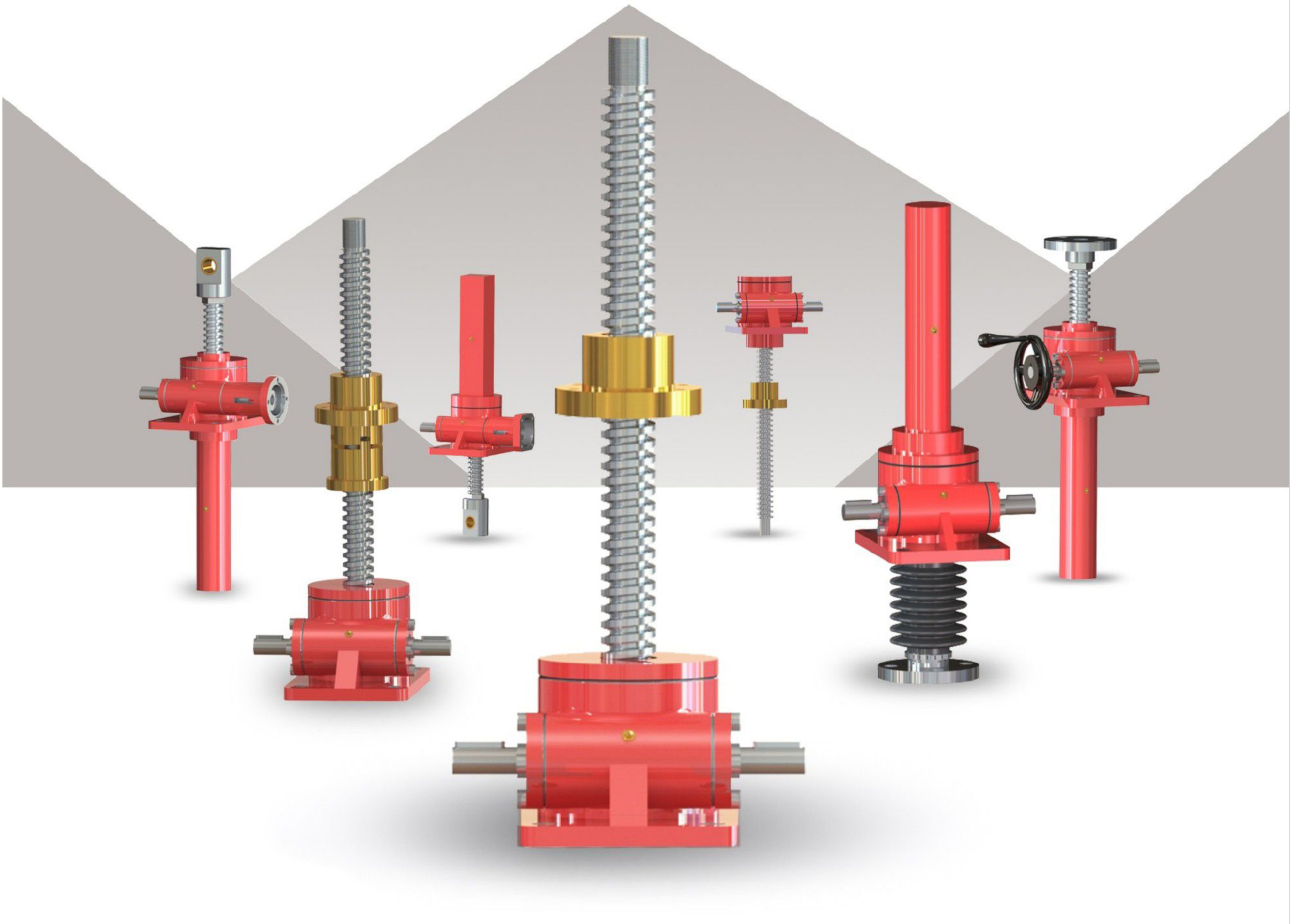

HK蜗轮丝杆升降机选型手册

HK-1A

HK-1B

示例Example：

HK 5T - 6 - 1 - A - II - 100 - FZ - C

1 2 3 4 5 6 7 8 9

1. HK：系列号，HK系列-蜗轮+T型丝杆升降机；
2. 5T：型号，以升降机的静载能力作为型号；主要有：2T，3T，5T，10T，15T，20T，30T，40T，50T，100T;
3. 6：升降机速比；
4. 1：结构型号；1型：螺母作旋转运动、丝杆作轴向运动（本页展示的产品均为I型）；2型：丝杆作旋转运动、螺母作轴向运动；
5. A：装配型式；A型：丝杆（或螺母）向上（安装面）移动；B型：丝杆（或螺母）向下（安装面）移动；
6. T：丝杆头部型式：1型丝杆头部分为I型（圆柱型）、II型（法兰型）、III型（螺纹型）、IV型（扁头型）四种；
   2型丝杆头部分为I型（圆柱型）、III型（螺纹型）；
7. 100：升降行程；客户自定义；
8. FZ：丝杆的防旋和防护；
   1型结构有基本型、防旋转型（F-键防旋）和带防护罩型（Z钢管防护-被动侧，X伸缩管防护-主动侧，Q两种都有）；
   2型结构有基本型和带防护罩型（X伸缩管防护-主动侧）；
9. C：轴指向A；B；C；

1. HK: serial number, HK series - worm gear + T type screw lift;\
2. 5T: model, with the static load capacity of the lift as the model; mainly: 2T, 3T, 5T, 10T, 15T, 20T, 30T, 40T, 50T, 100T;
3. 6: elevator speed ratio;
4. 1: Structural model; Type 1: nut for rotary motion, screw for axial movement (products shown on this page are type I);
   Type 2: screw for rotary motion, nut for axial movement;
5. A: assembly type; type A: the screw (or nut) moves up (mounting surface); type B: the screw (or nut) moves down (mounting surface);
6. T: screw head type: 1 type screw head is divided into I type (cylindrical type), type II (flange type), type III (thread type), type IV (flat head type);
   2 type screw head is divided into I type (cylindrical type) and type III (thread type);
7. 100: lifting stroke; customer customization;
8. FZ: anti-rotation and protection of the screw;
   Type 1 structure has basic type, anti-rotation type (F-key anti-rotation) and protective cover type (Z steel pipe protection - passive side, X telescopic tube protection - active side, Q both);
   Type 2 structure has basic type and protective cover type (X telescopic tube protection - active side);
9. C: the axis points to A; B; C;

HK初选表 / HK primary selection form

型号Model / 类别Category	单位 unit	HK2T	HK3T	HK5T	HK10T	HK15T	HK20T	HK30T	HK40T	HK50T	HK100T
最大起升力Maximum lifting force	KN	20	30	50	100	150	200	300	400	500	1000
最大拉伸力Maximum tensile force	KN	20	30	50	100	150	200	300	400	500	1000
丝杆参数Screw parameter		Tr26×5	Tr32×6	Tr38×6	Tr46×8	Tr52×8	Tr65×10	Tr75×12	Tr80×12	Tr90×14	Tr100×16
速比I Speed ratio I		5	6	6	8	8	10	12	12	7	8
对应蜗杆每转丝杆提升量 Corresponding to the lifting amount of the screw per worm	mm	1	1	1	1	1	1	1	1	2	2
对应升降效率Corresponding lifting efficiency	%	21	21	19	18	19	15	15	14	12	12
速比II Speed ratio II		10	12	12	16	16	20	18	18	14	16
对应蜗杆每转丝杆提升量 Corresponding to the lifting amount of the screw per worm	mm	0.5	0.5	0.5	0.5	0.5	0.5	0.66	0.66	1	1
对应升降效率Corresponding lifting efficiency	%	18	18	18	17	18	15	14	13	12	11
速比III Speed ratio III		20	24	24	32	32	40	36	36	28	32
对应蜗杆每转丝杆提升量 Corresponding to the lifting amount of the screw per worm	mm	0.25	0.25	0.25	0.25	0.25	0.25	0.33	0.33	0.5	0.25
对应升降效率Corresponding lifting efficiency	%	11	17	17	16	17	11	13	12	10	9
外壳材料Housing material		球磨 ball milling	球磨 ball milling	球磨 ball milling	球磨 ball milling	球磨 ball milling	球磨 ball milling	球磨 ball milling	球磨 ball milling	球磨 ball milling	球磨 ball milling

HK2T 1型结构 / HK2T type 1 structure

1A丝杆向上
1A Upright translating screw

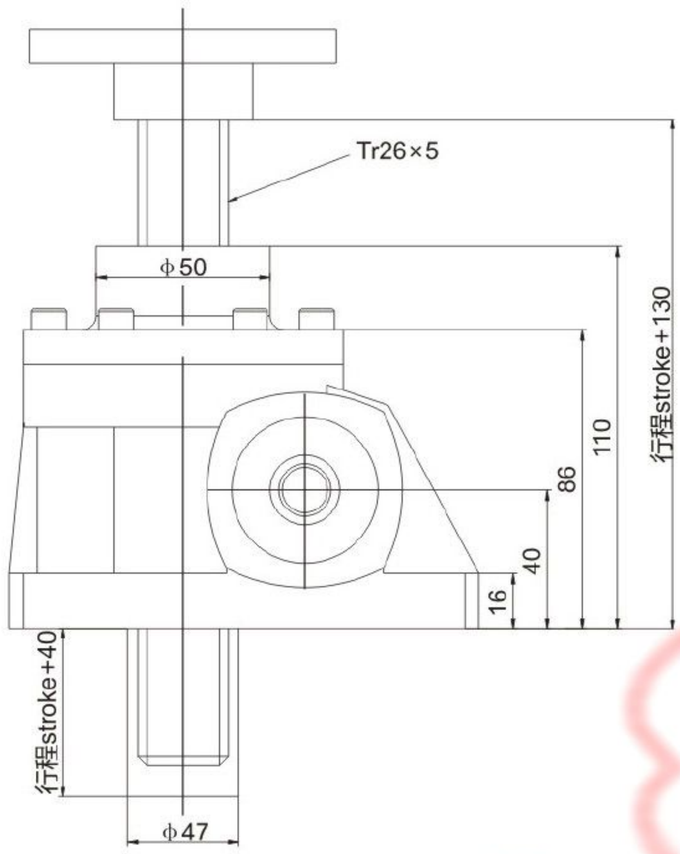

1B丝杆向下
1B Inverted translating screw

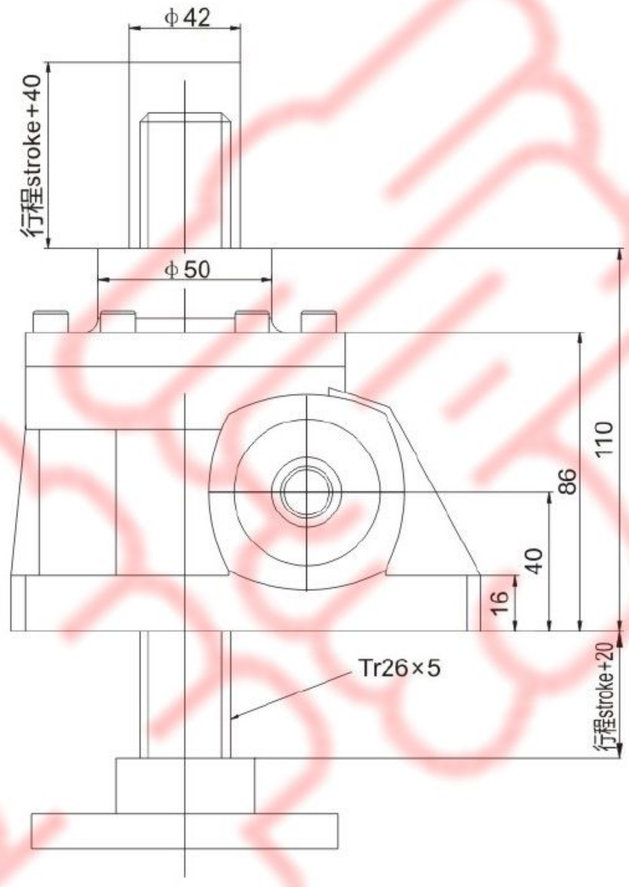

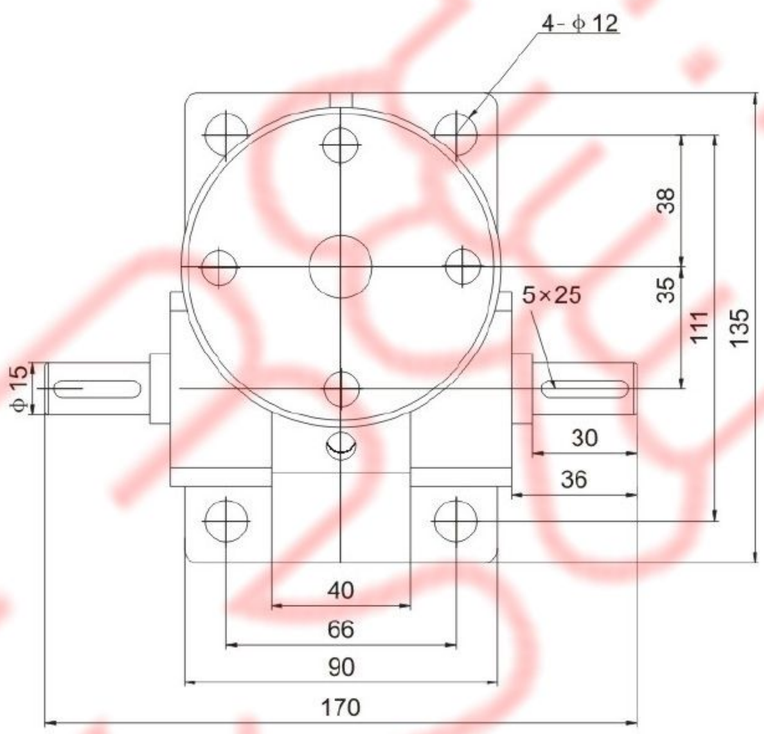

丝杆头部可选
Screw head optional

I型 / Type I

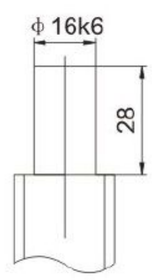

II型 / Type II

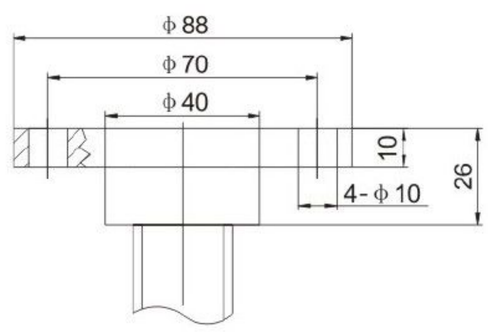

III型 / Type III

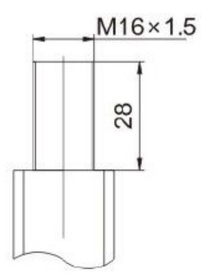

IV型 / Type IV

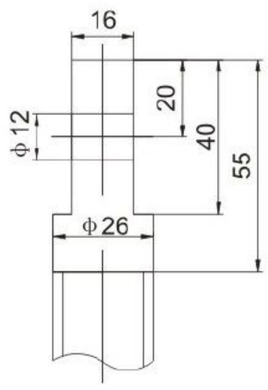

轴指向 Shaft Direction

常用轴指向 C Common axis pointing C	可选轴指向 B Optional axis pointing B	可选轴指向 A Optional axis pointing A
	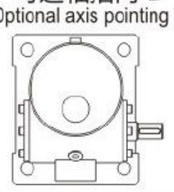	

HK3T 1型结构 / HK3T type 1 structure

1A丝杆向上
1A Upright translating screw

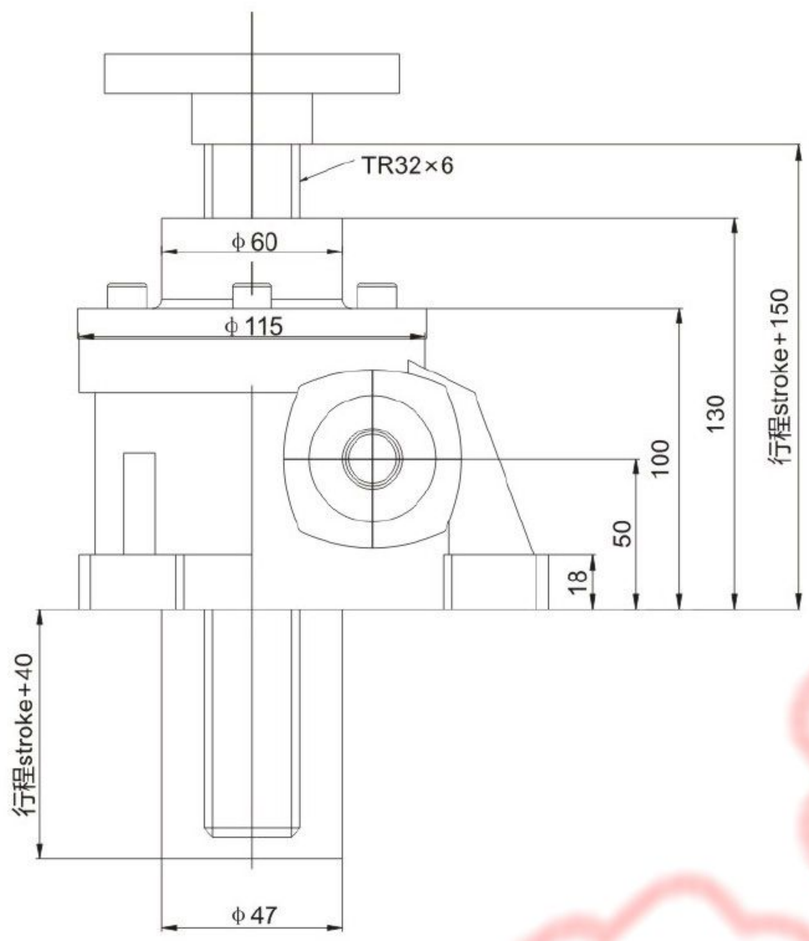

1B丝杆向下
1B Inverted translating screw

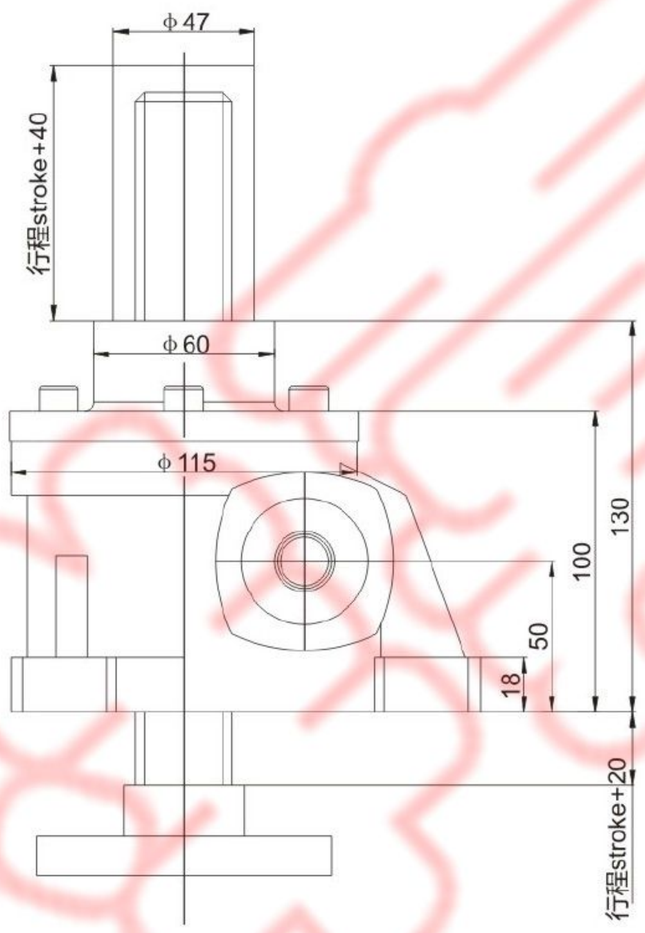

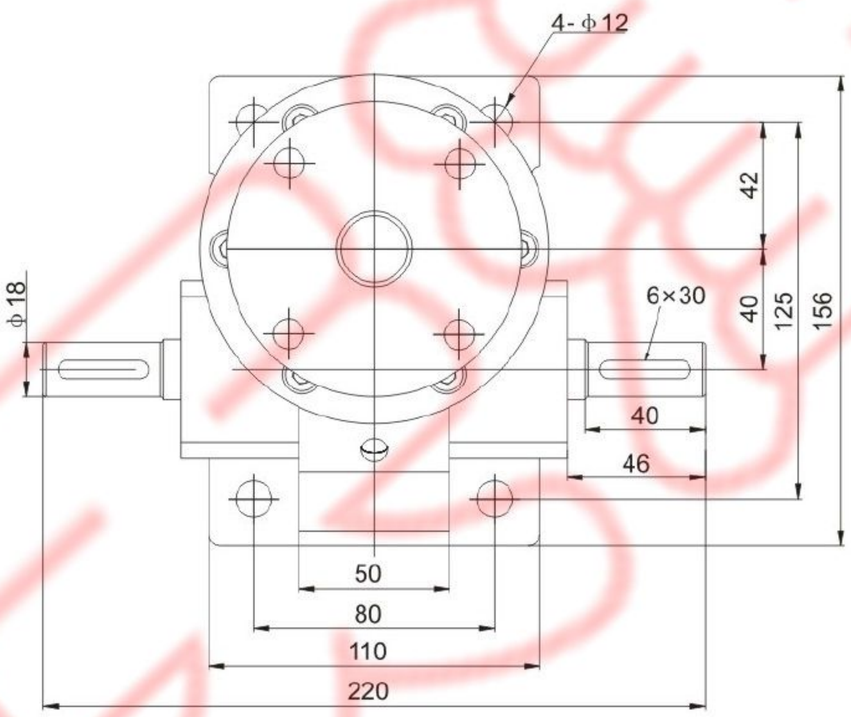

丝杆头部可选
Screw head optional

I型 / Type I

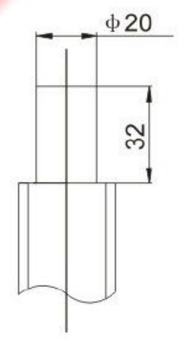

II型 / Type II

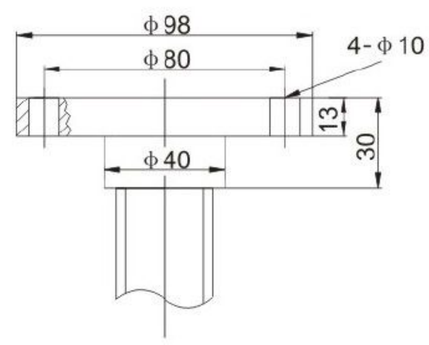

III型 / Type III

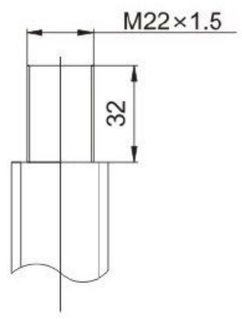

IV型 / Type IV

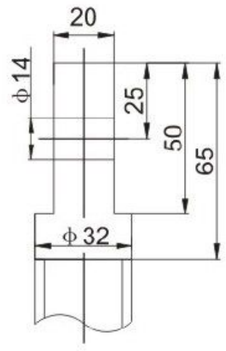

轴指向 Shaft Direction

常用轴指向 C Common axis pointing C	可选轴指向 B Optional axis pointing B	可选轴指向 A Optional axis pointing A
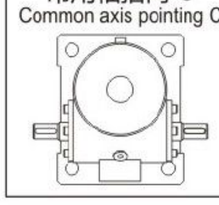	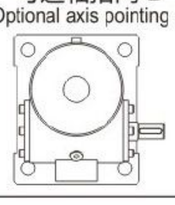	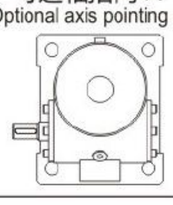

HK5T 1型结构 / HK5T type 1 structure

1A丝杆向上
1A Upright translating screw

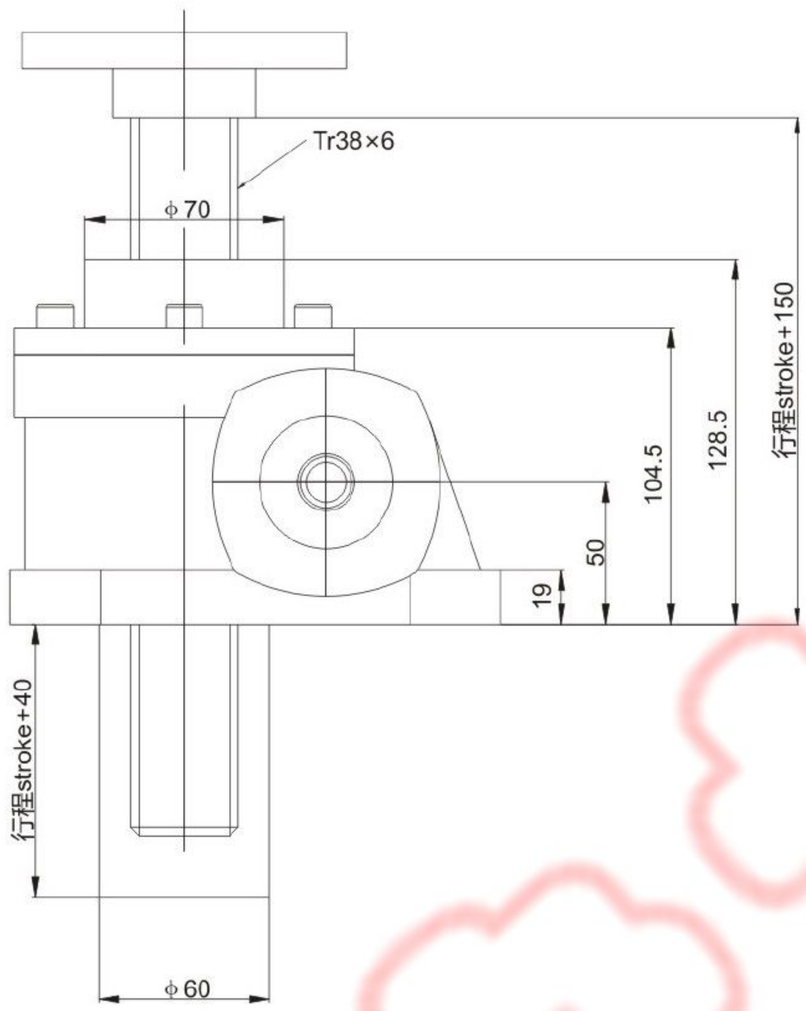

1B丝杆向下
1B Inverted translating screw

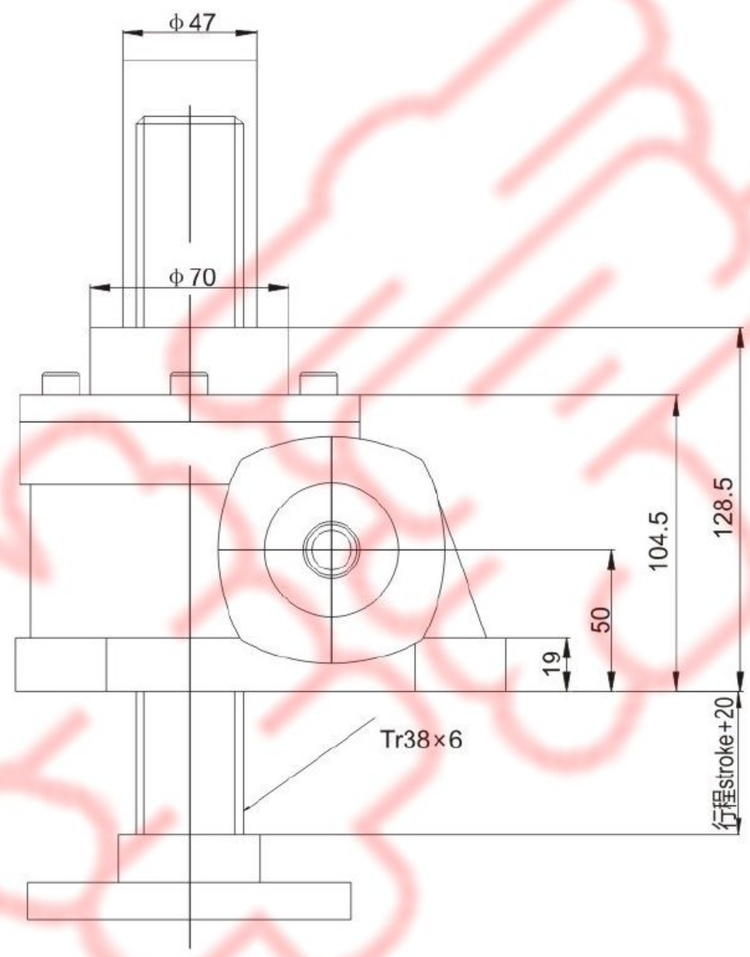

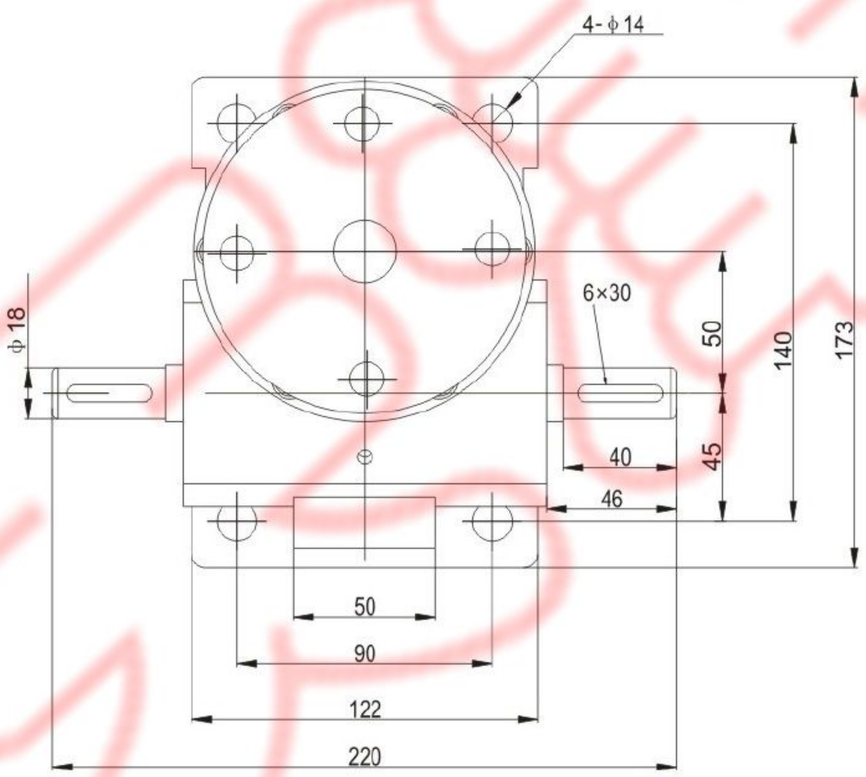

丝杆头部可选
Screw head optional

I型 / Type I

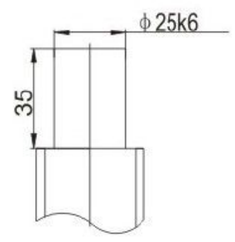

II型 / Type II

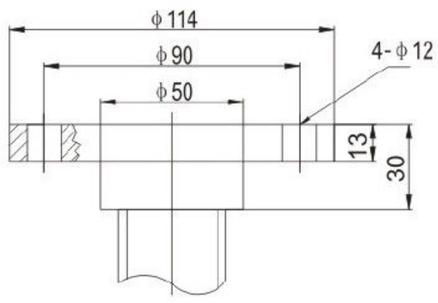

III型 / Type III

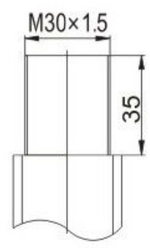

IV型 / Type IV

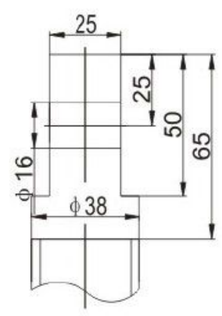

轴指向 Shaft Direction

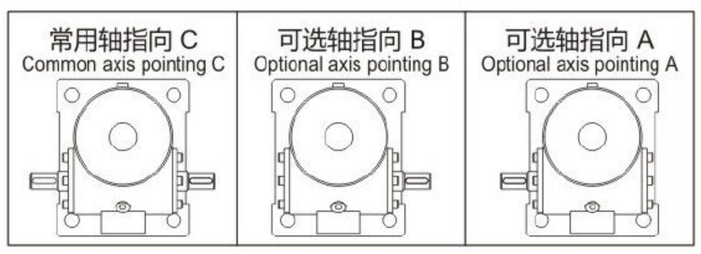

HK10T 1型结构 / HK10T type 1 structure

1A丝杆向上
1A Upright translating screw

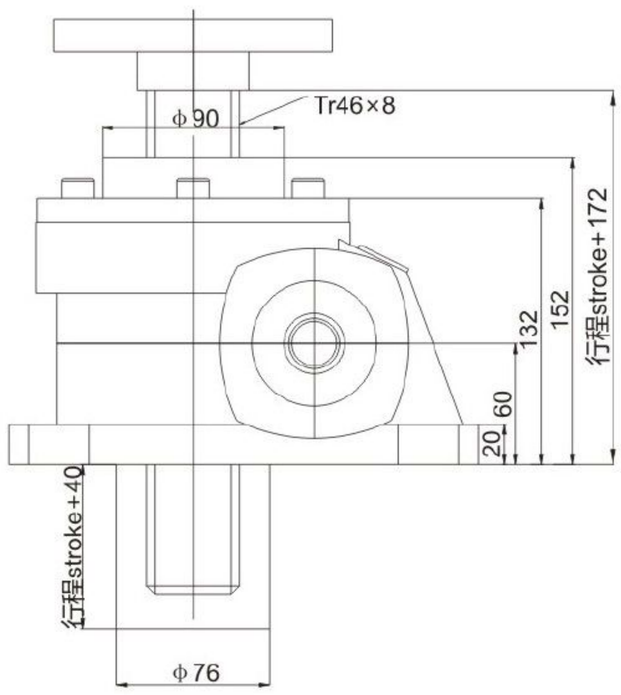

1B丝杆向下
1B Inverted translating screw

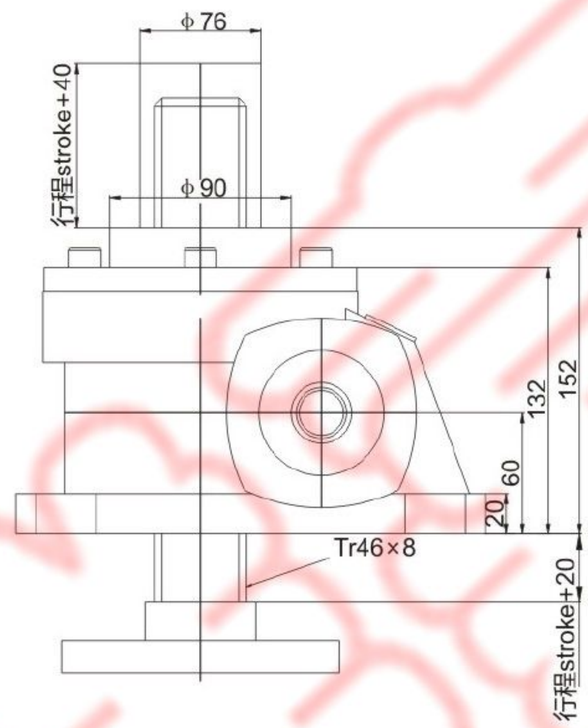

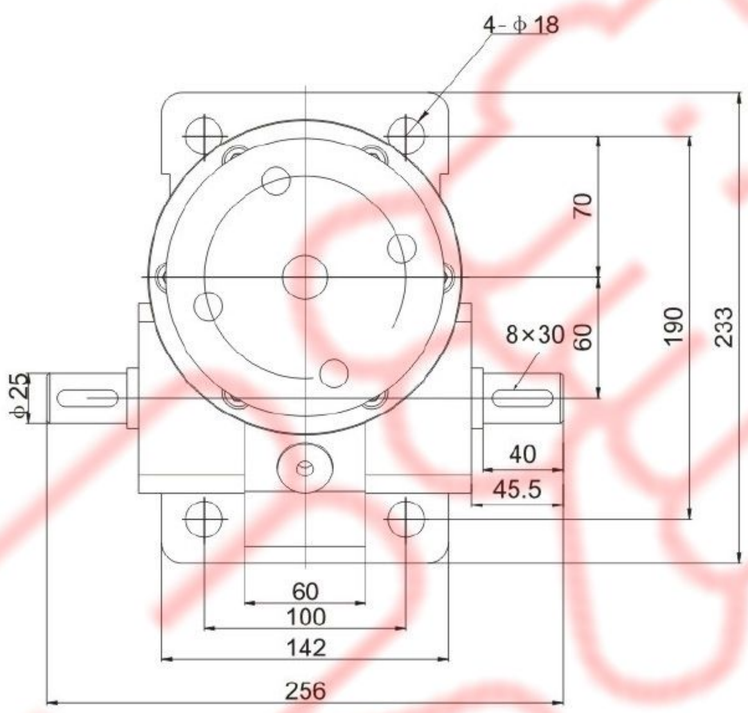

丝杆头部可选
Screw head optional

I型 / Type I

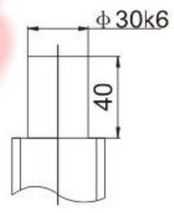

II型 / Type II

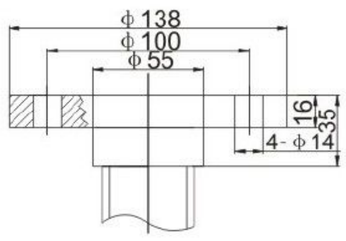

III型 / Type III

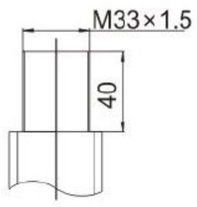

IV型 / Type IV

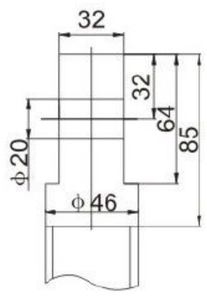

轴指向 Shaft Direction

常用轴指向 C Common axis pointing C	可选轴指向 B Optional axis pointing B	可选轴指向 A Optional axis pointing A
	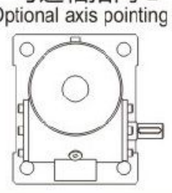	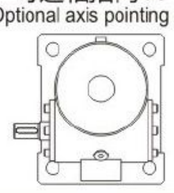

HK15T 1型结构 / HK15T type 1 structure

1A丝杆向上
1A Upright translating screw

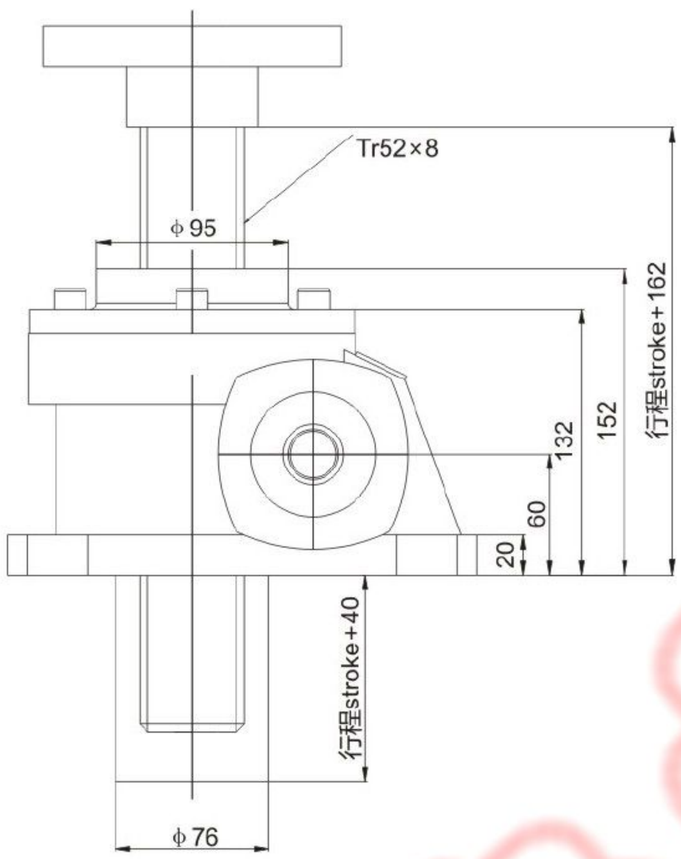

1B丝杆向下
1B Inverted translating screw

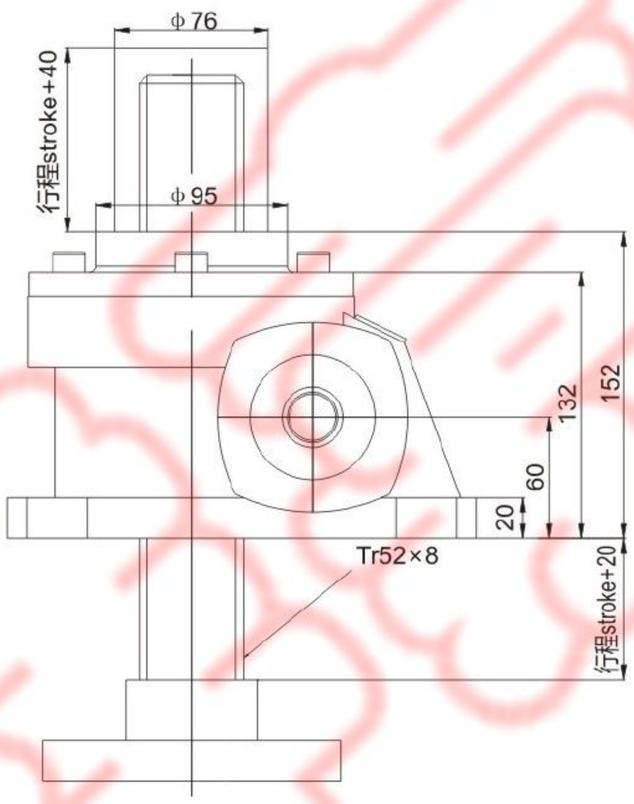

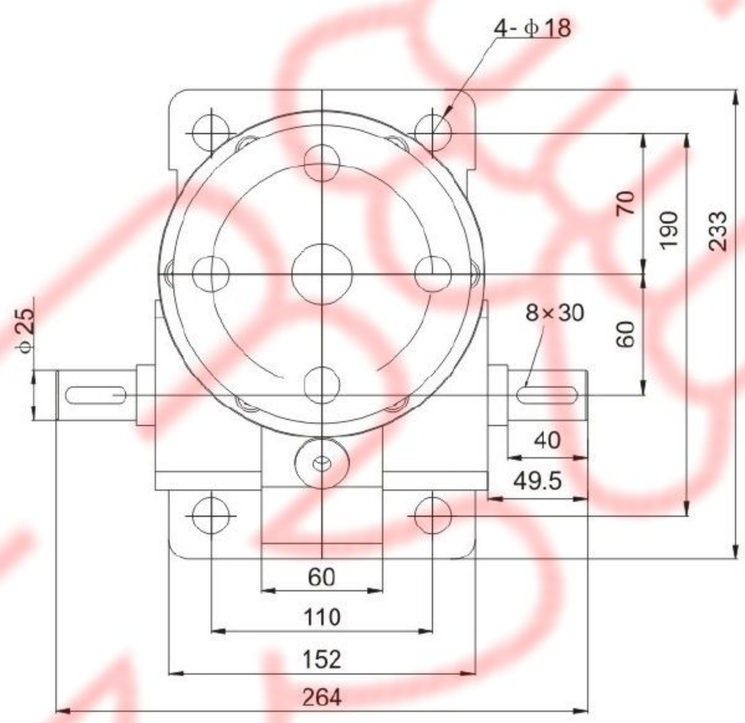

丝杆头部可选
Screw head optional

I型 / Type I

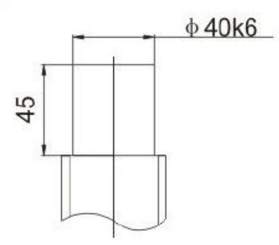

II型 / Type II

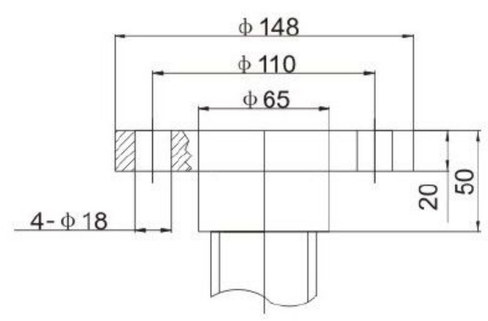

III型 / Type III

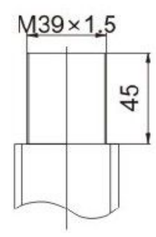

IV型 / Type IV

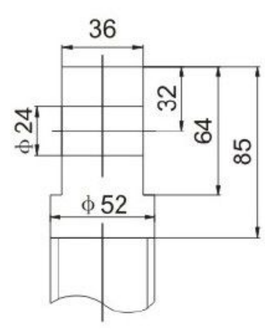

轴指向 Shaft Direction

常用轴指向 C Common axis pointing C	可选轴指向 B Optional axis pointing B	可选轴指向 A Optional axis pointing A
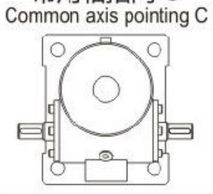	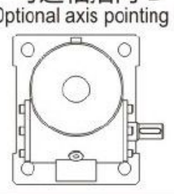	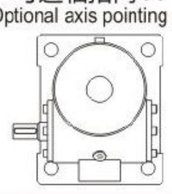

HK20T 1型结构 / HK20T type 1 structure

1A丝杆向上
1A Upright translating screw

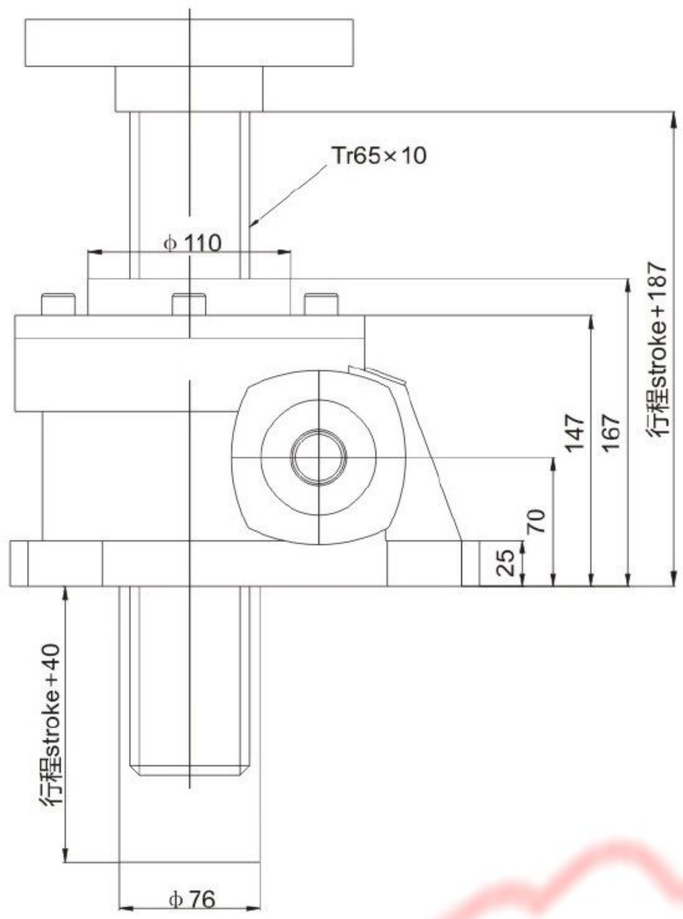

1B丝杆向下
1B Inverted translating screw

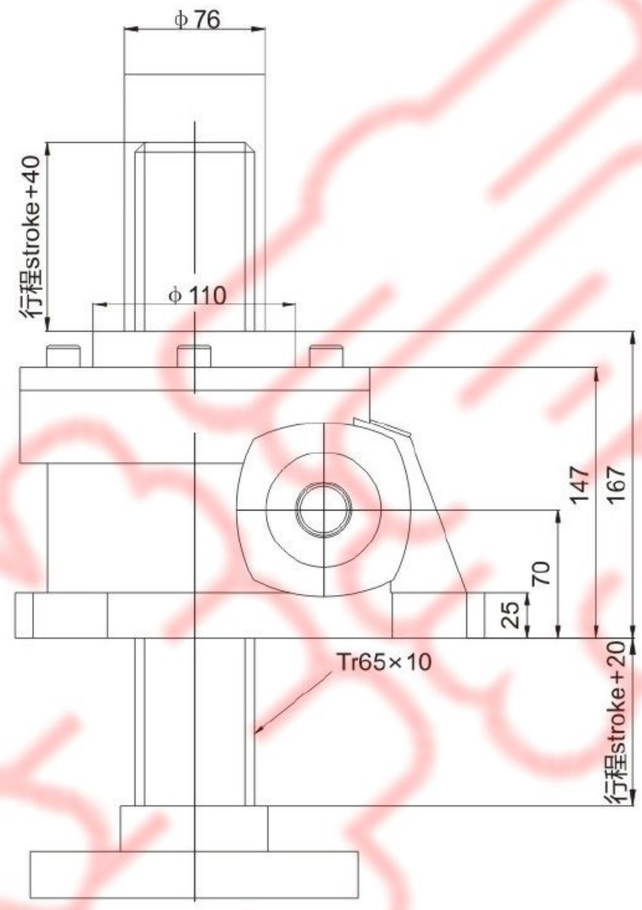

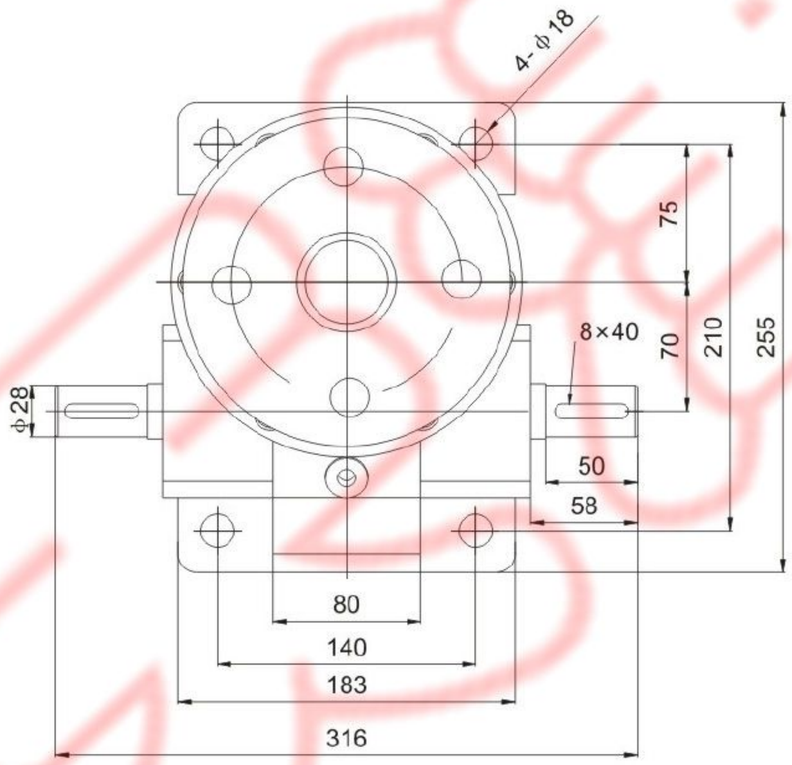

丝杆头部可选
Screw head optional

I型 / Type I

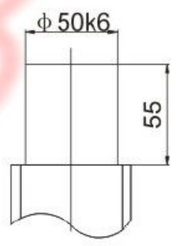

II型 / Type II

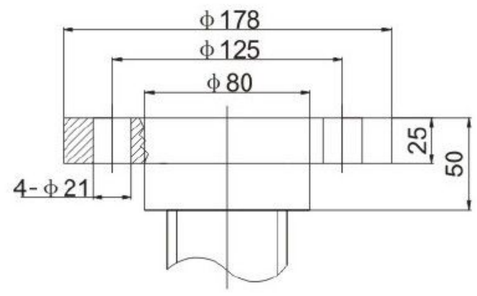

III型 / Type III

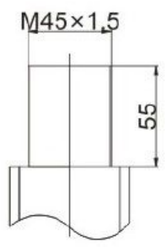

IV型 / Type IV

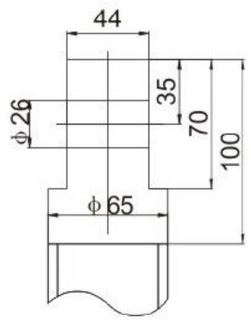

轴指向 Shaft Direction

常用轴指向 C Common axis pointing C	可选轴指向 B Optional axis pointing B	可选轴指向 A Optional axis pointing A
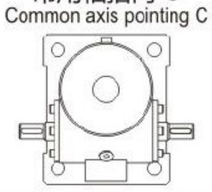	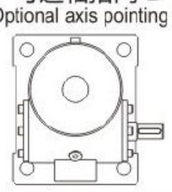	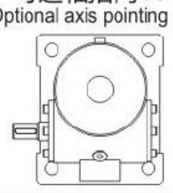

HK30T 1型结构 / HK30T type 1 structure

1A丝杆向上
1A Upright translating screw

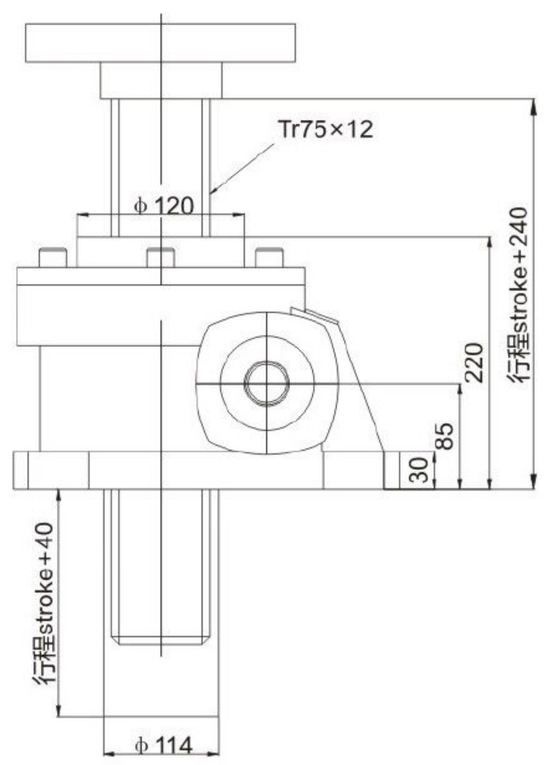

1B丝杆向下
1B Inverted translating screw

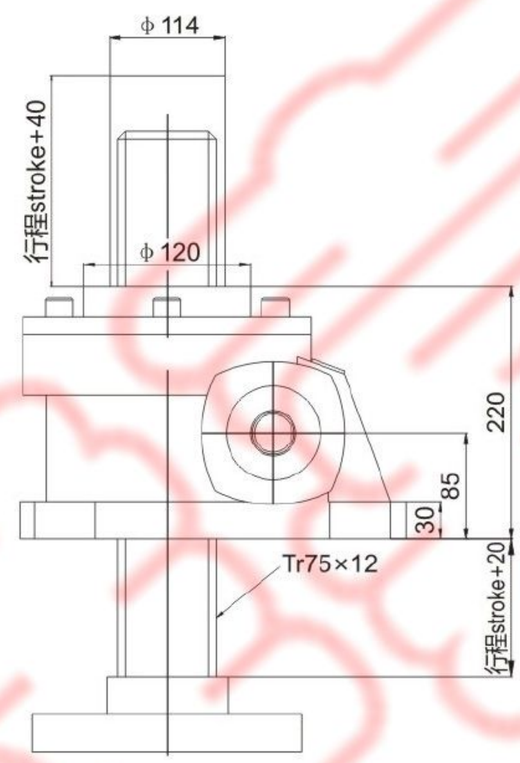

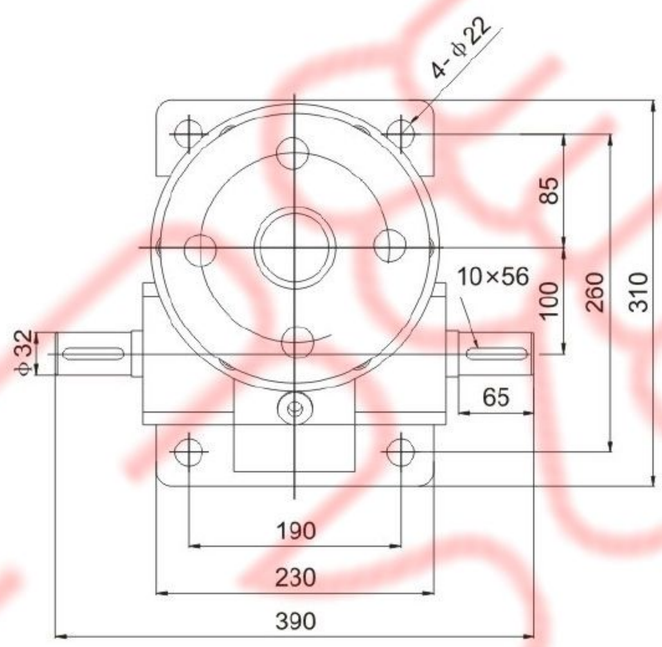

丝杆头部可选
Screw head optional

I型 / Type I

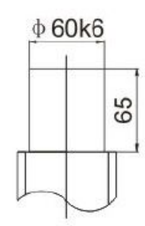

II型 / Type II

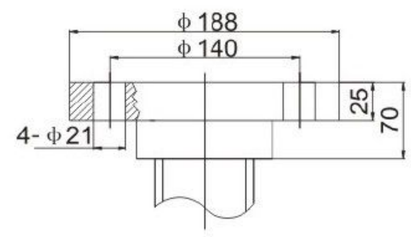

III型 / Type III

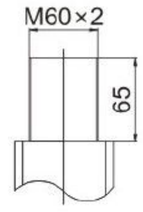

IV型 / Type IV

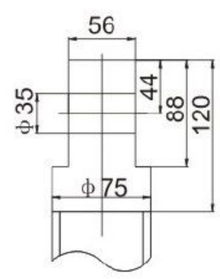

轴指向 Shaft Direction

常用轴指向 C Common axis pointing C	可选轴指向 B Optional axis pointing B	可选轴指向 A Optional axis pointing A
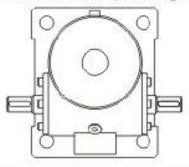	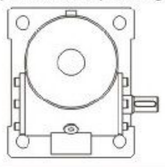	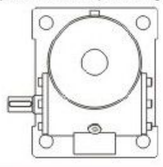

HK40T 1型结构 / HK40T type 1 structure

1A丝杆向上
1A Upright translating screw

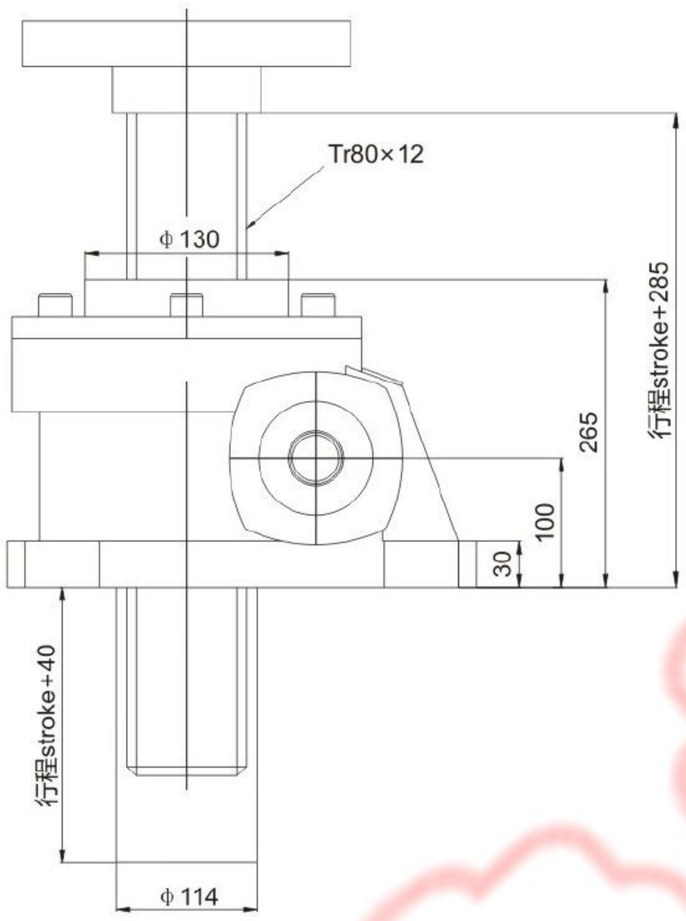

1B丝杆向下
1B Inverted translating screw

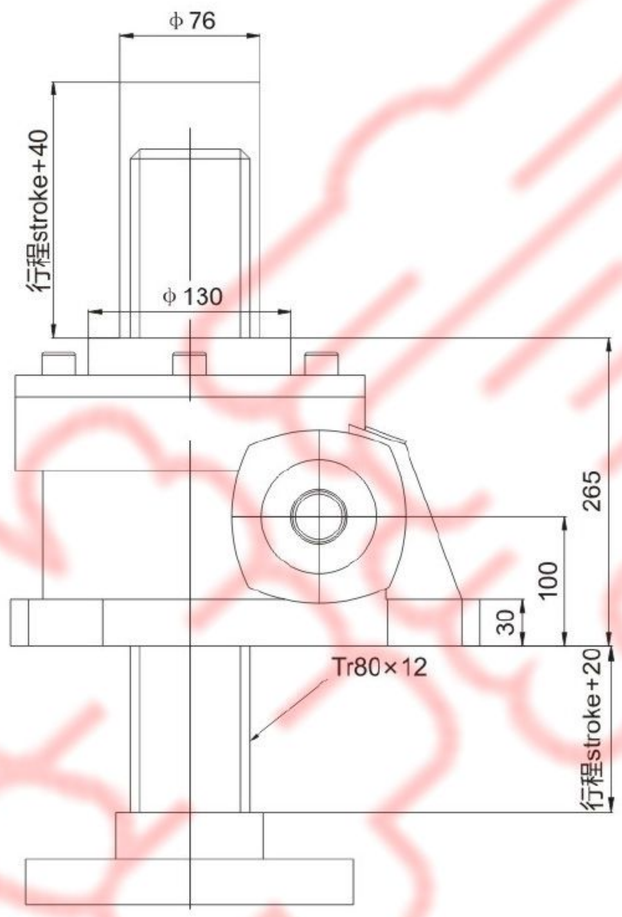

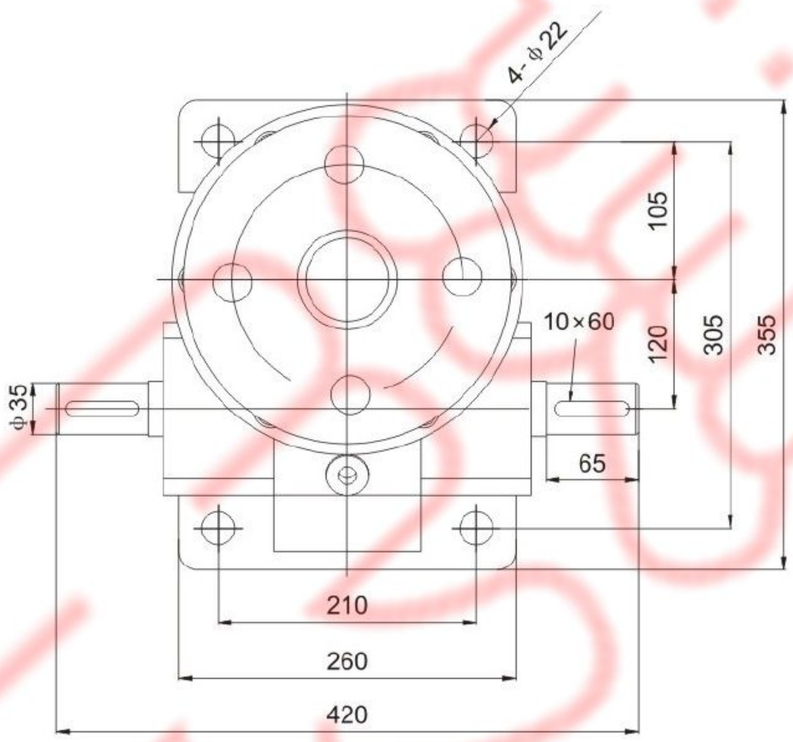

丝杆头部可选
Screw head optional

I型 / Type I

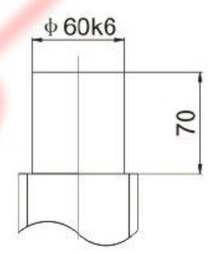

II型 / Type II

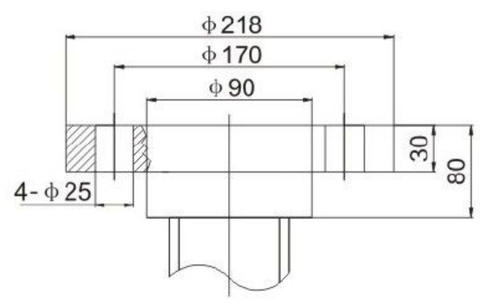

III型 / Type III

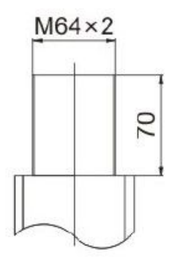

IV型 / Type IV

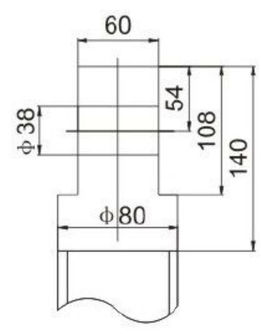

轴指向 Shaft Direction

常用轴指向 C Common axis pointing C	可选轴指向 B Optional axis pointing B	可选轴指向 A Optional axis pointing A
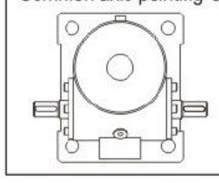	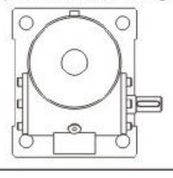	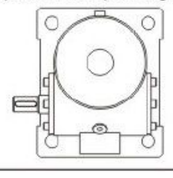

HK50T 1型结构 / HK50T type 1 structure

1A丝杆向上
1A Upright translating screw

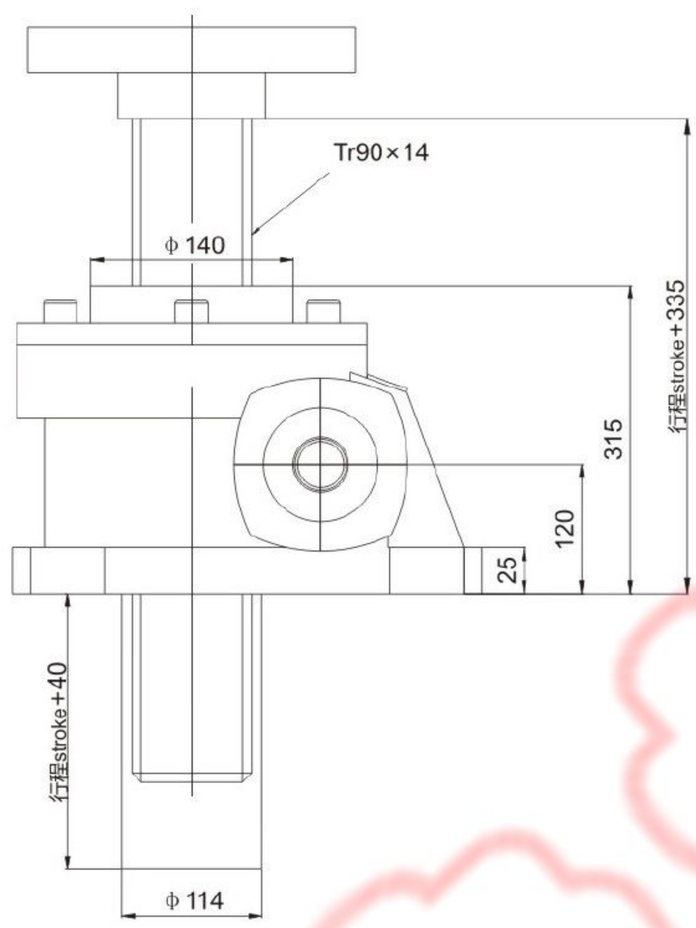

1B丝杆向下
1B Inverted translating screw

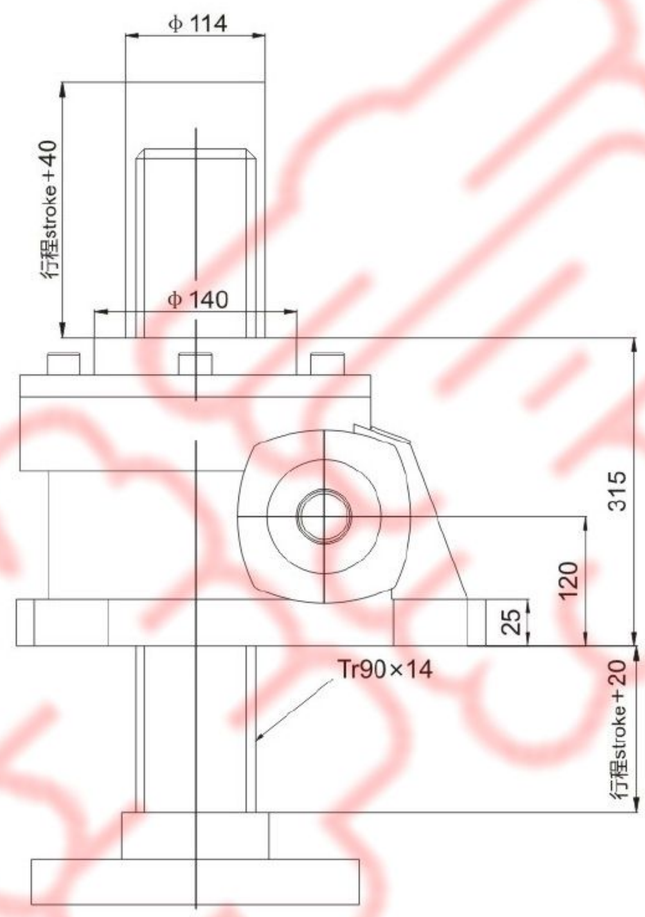

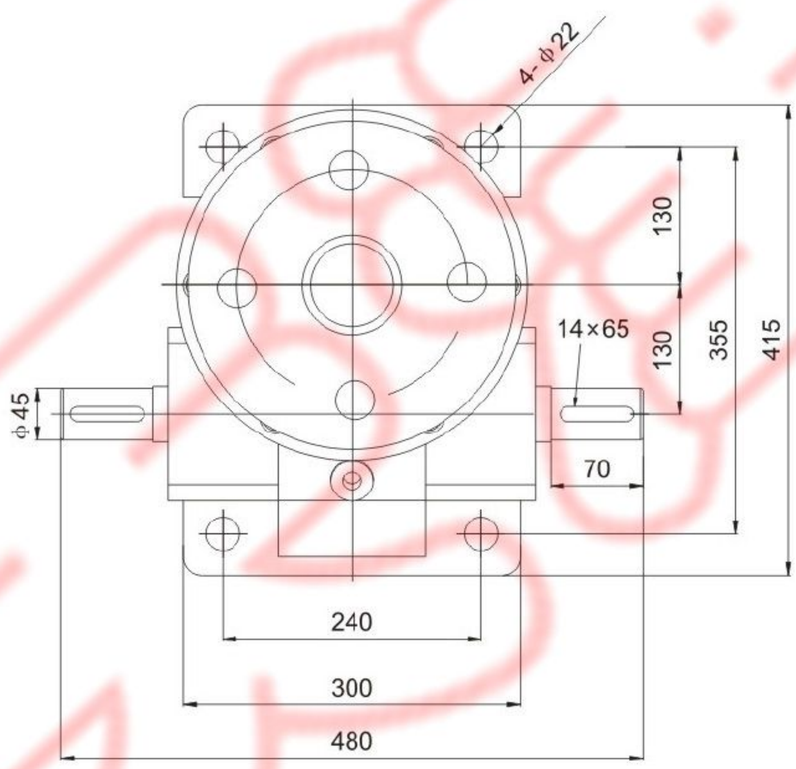

丝杆头部可选
Screw head optional

I型 / Type I

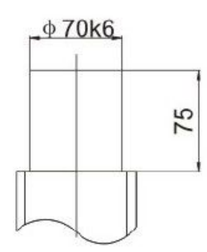

II型 / Type II

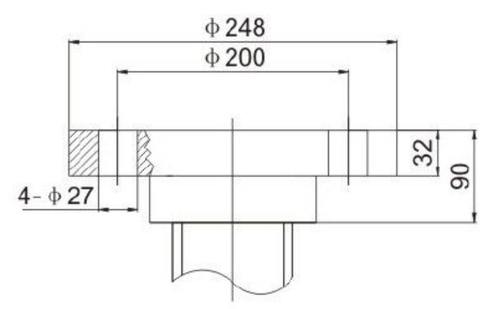

III型 / Type III

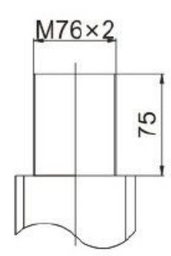

IV型 / Type IV

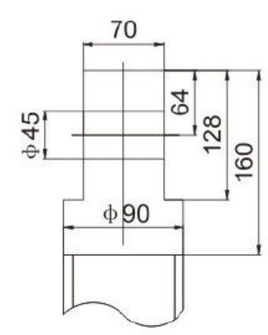

轴指向 Shaft Direction

常用轴指向 C Common axis pointing C	可选轴指向 B Optional axis pointing B	可选轴指向 A Optional axis pointing A
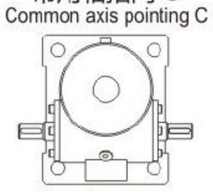	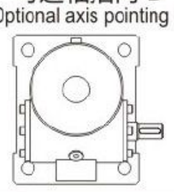	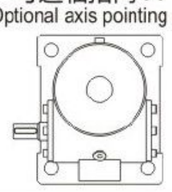

HK100T 1型结构 / HK100T type 1 structure

1A丝杆向上
1A Upright translating screw

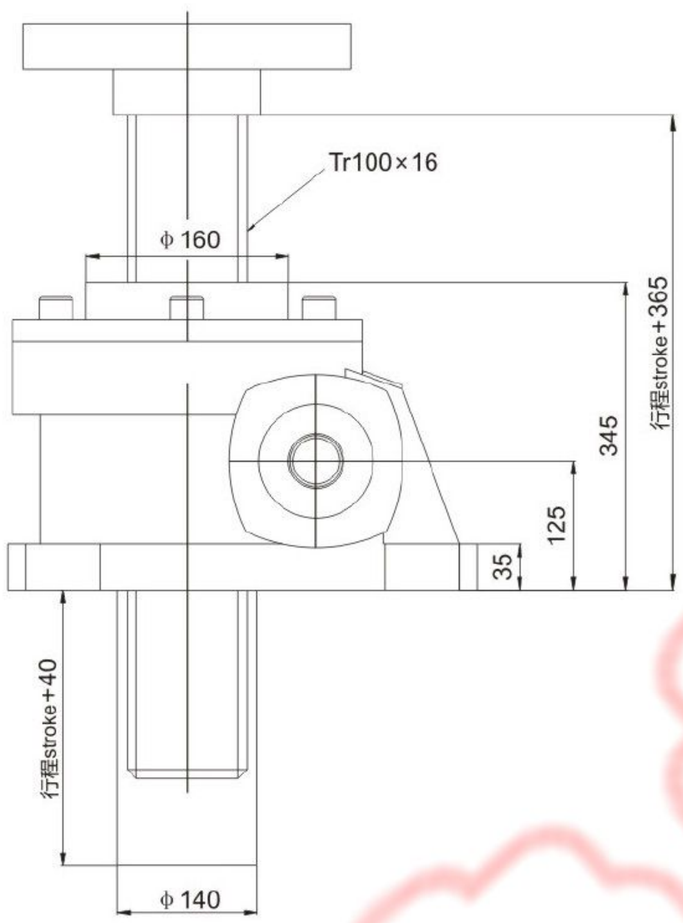

1B丝杆向下
1B Inverted translating screw

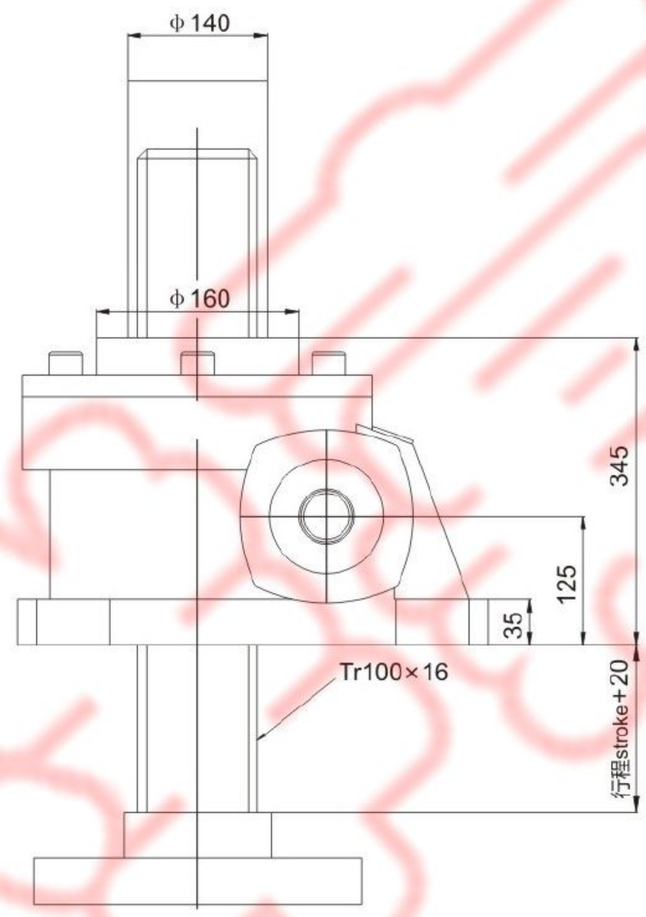

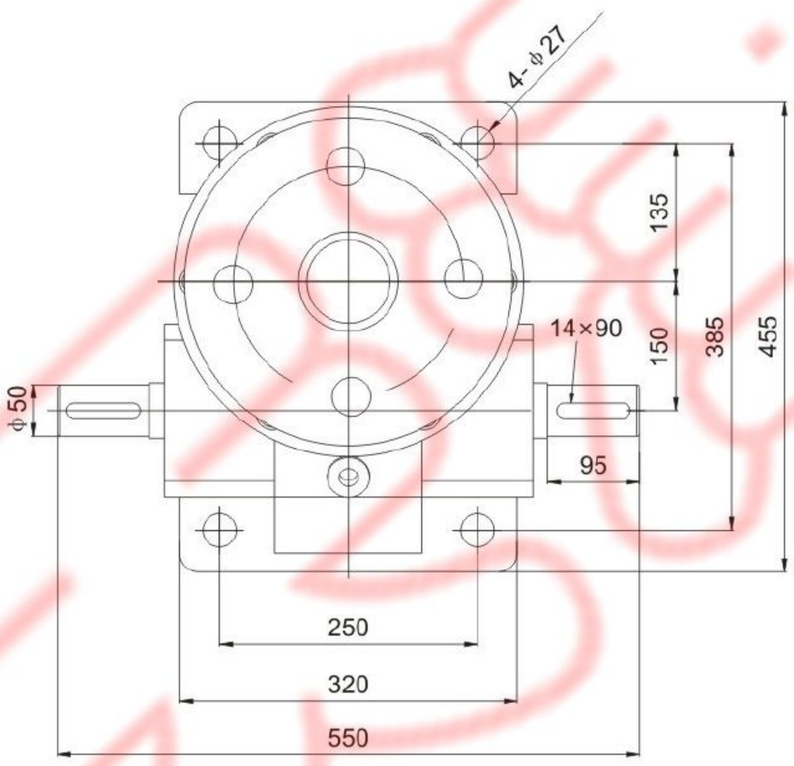

丝杆头部可选
Screw head optional

I型 / Type I

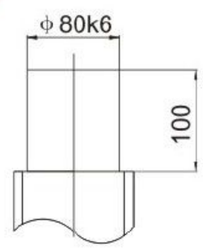

II型 / Type II

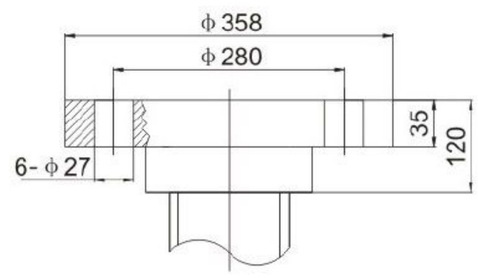

III型 / Type III

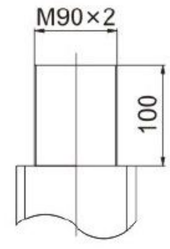

IV型 / Type IV

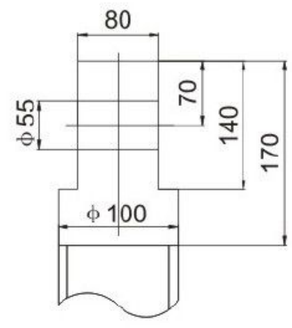

轴指向 Shaft Direction

常用轴指向 C Common axis pointing C	可选轴指向 B Optional axis pointing B	可选轴指向 A Optional axis pointing A
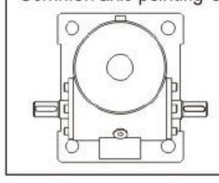	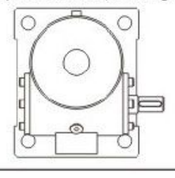	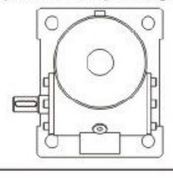

HK-2A

HK-2B

示例Example：

HK 5T - 6 - 1 - A - II - 100 - FZ - C

1 2 3 4 5 6 7 8 9

1. HK：系列号，HK系列-蜗轮+T型丝杆升降机；
2. 5T：型号，以升降机的静载能力作为型号；主要有：2T，3T，5T，10T，15T，20T，30T，40T，50T，100T;
3. 6：升降机速比；
4. 1：结构型号；1型：螺母作旋转运动、丝杆作轴向运动（本页展示的产品均为I型）；2型：丝杆作旋转运动、螺母作轴向运动；
5. A：装配型式；A型：丝杆（或螺母）向上（安装面）移动；B型：丝杆（或螺母）向下（安装面）移动；
6. T：丝杆头部型式：1型丝杆头部分为I型（圆柱型）、II型（法兰型）、III型（螺纹型）、IV型（扁头型）四种；
   2型丝杆头部分为I型（圆柱型）、III型（螺纹型）；
7. 100：升降行程；客户自定义；
8. FZ：丝杆的防旋和防护；
   1型结构有基本型、防旋转型（F-键防旋）和带防护罩型（Z钢管防护-被动侧，X伸缩管防护-主动侧，Q两种都有）；
   2型结构有基本型和带防护罩型（X伸缩管防护-主动侧）；
9. C：轴指向A；B；C；

1. HK: serial number, HK series - worm gear + T type screw lift;
2. 5T: model, with the static load capacity of the lift as the model; mainly: 2T, 3T, 5T, 10T, 15T, 20T, 30T, 40T, 50T, 100T;
3. 6: elevator speed ratio;
4. 1: Structural model; Type 1: nut for rotary motion, screw for axial movement (products shown on this page are type I);
   Type 2: screw for rotary motion, nut for axial movement;
5. A: assembly type; type A: the screw (or nut) moves up (mounting surface); type B: the screw (or nut) moves down (mounting surface);
6. T: screw head type: 1 type screw head is divided into I type (cylindrical type), type II (flange type), type III (thread type), type IV (flat head type);
   2 type screw head is divided into I type (cylindrical type) and type III (thread type);
7. 100: lifting stroke; customer customization;
8. FZ: anti-rotation and protection of the screw;
   Type 1 structure has basic type, anti-rotation type (F-key anti-rotation) and protective cover type (Z steel pipe protection - passive side, X telescopic tube protection - active side, Q both);
   Type 2 structure has basic type and protective cover type (X telescopic tube protection - active side);
9. C: the axis points to A; B; C;

HK2T 2型结构 / HK2T type 2 structure

2A螺母在上
2A Upright rotating screw

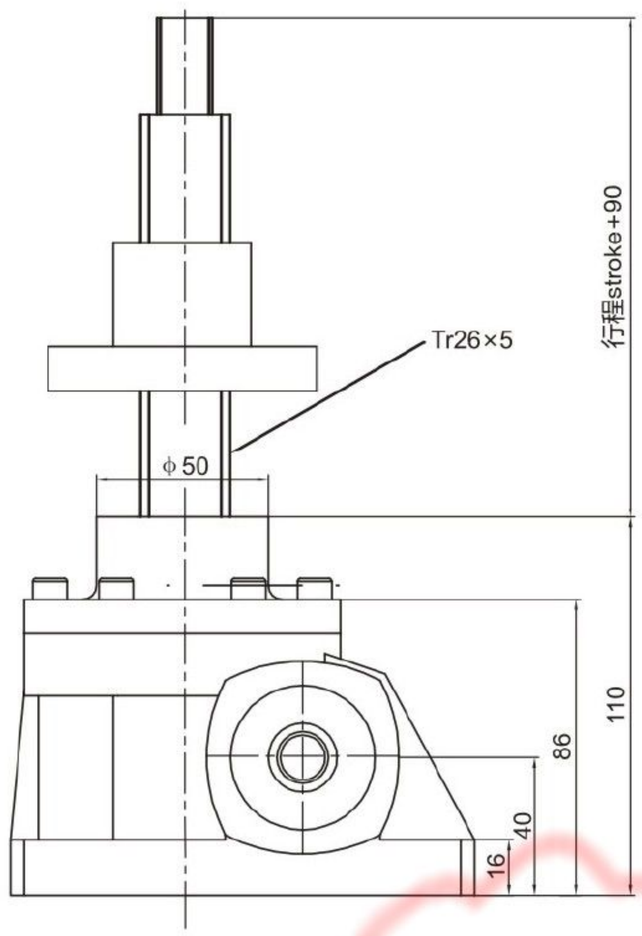

2B螺母在下
2B Inverted rotating screw

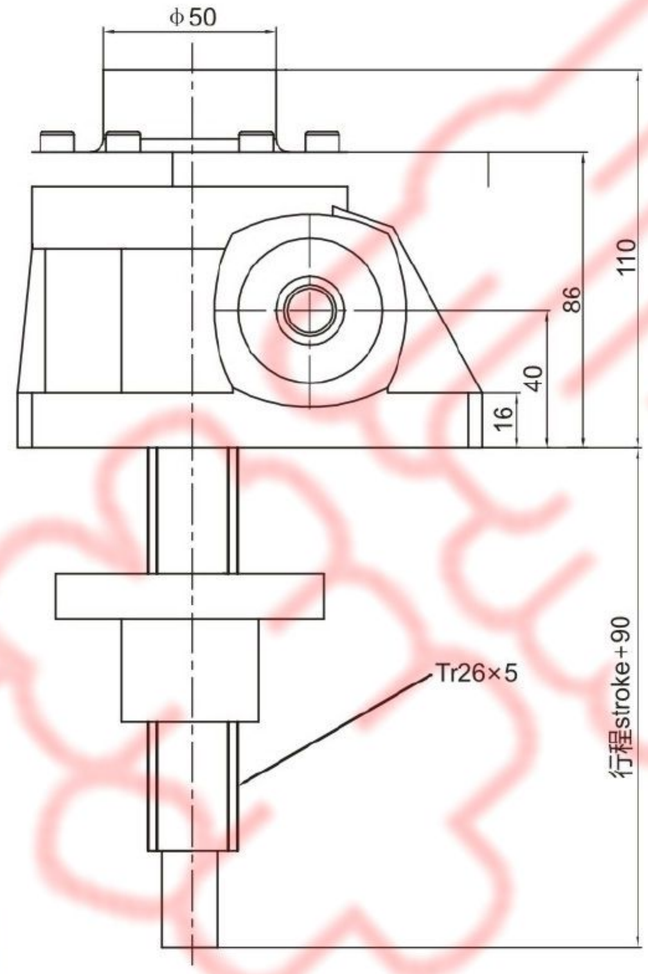

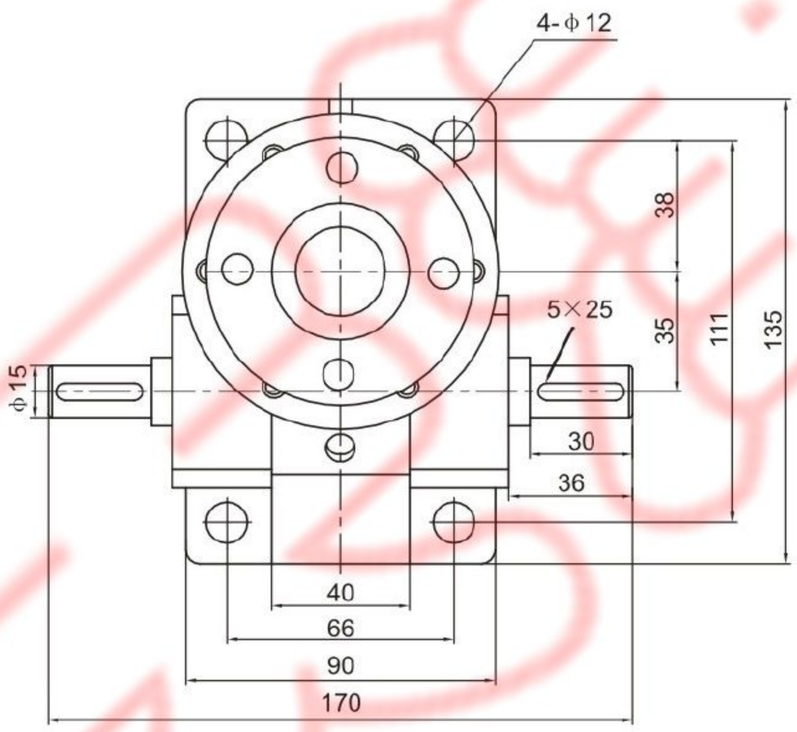

丝杆头部可选
Screw head optional

I型 / Type I

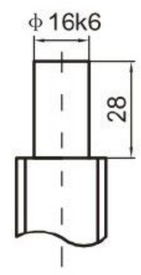

III型 / Type III

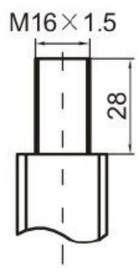

2型丝杆螺母
Type 2 screw nut

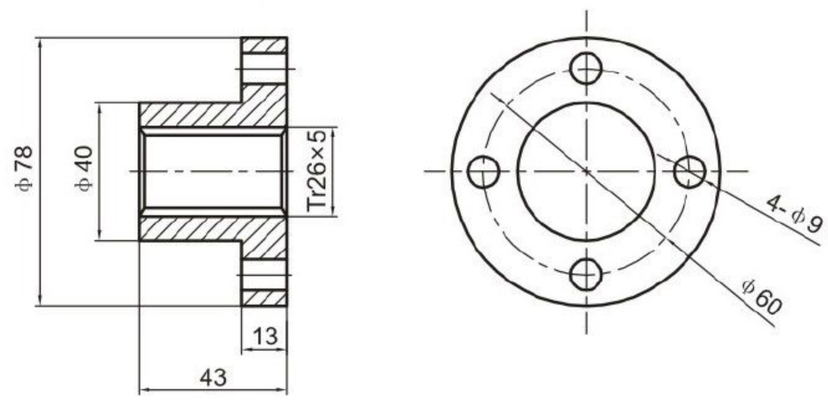

轴指向 Shaft Direction

常用轴指向 C Common axis pointing C	可选轴指向 B Optional axis pointing B	可选轴指向 A Optional axis pointing A
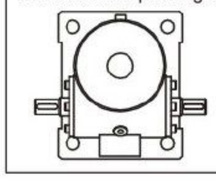	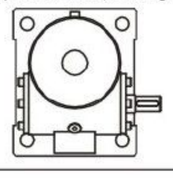	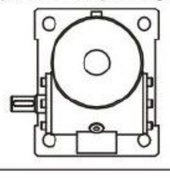

HK3T 2型结构 / HK3T type 2 structure

2A螺母在上
2A Upright rotating screw

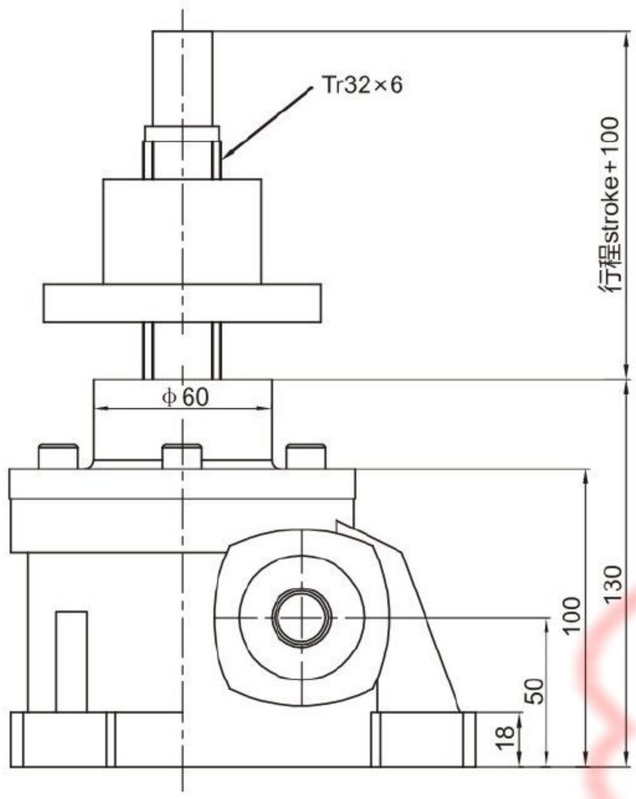

2B螺母在下
2B Inverted rotating screw

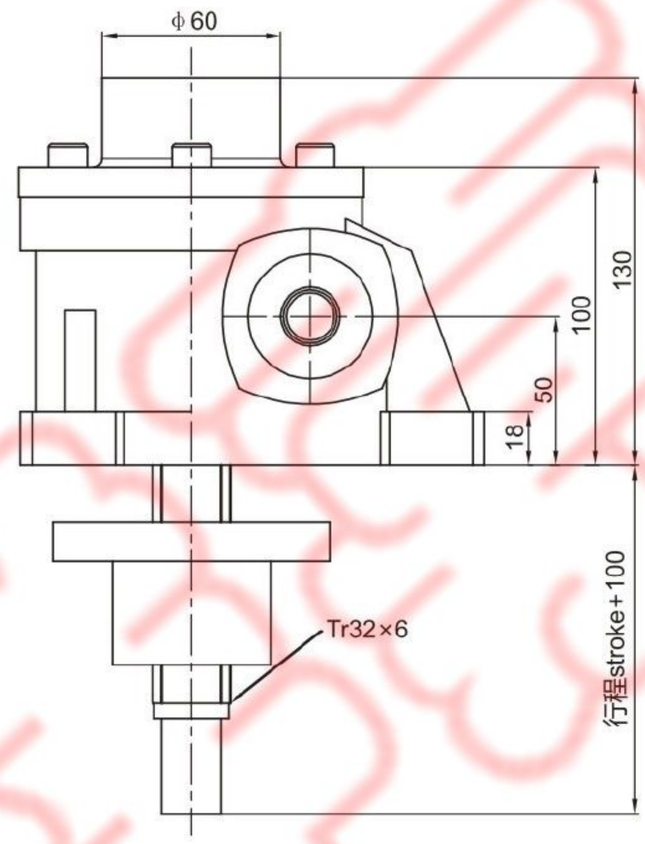

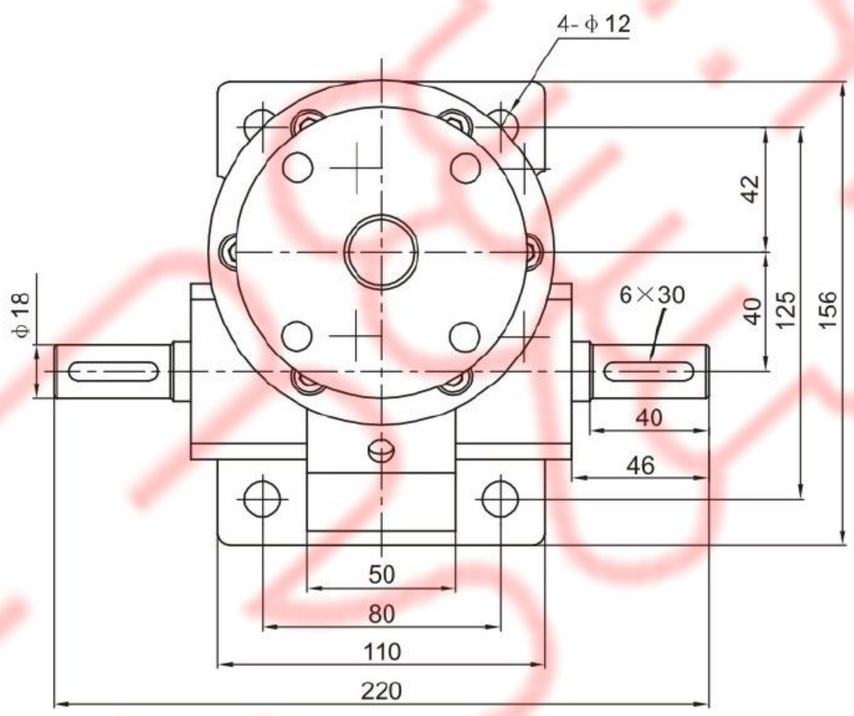

丝杆头部可选
Screw head optional

I型 / Type I

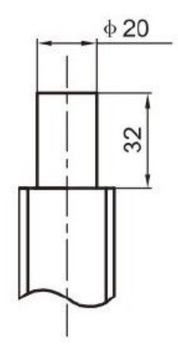

III型 / Type III

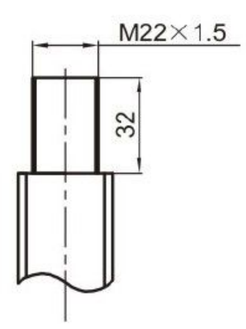

2型丝杆螺母
Type 2 screw nut

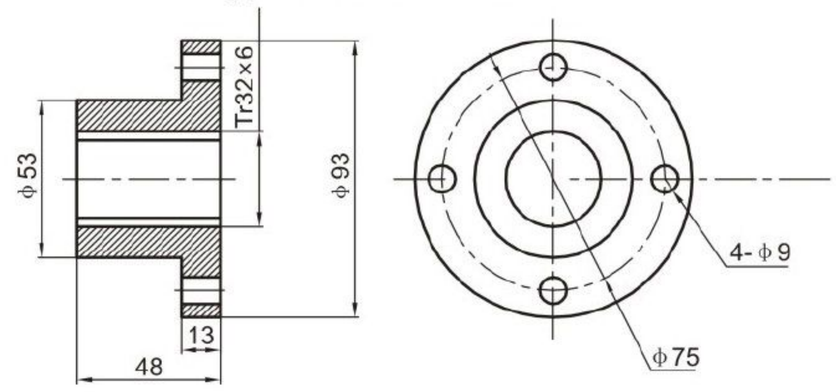

轴指向 Shaft Direction

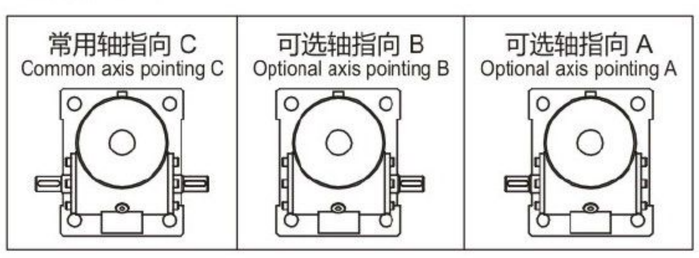

HK5T 2型结构 / HK5T type 2 structure

2A螺母在上
2A Upright rotating screw

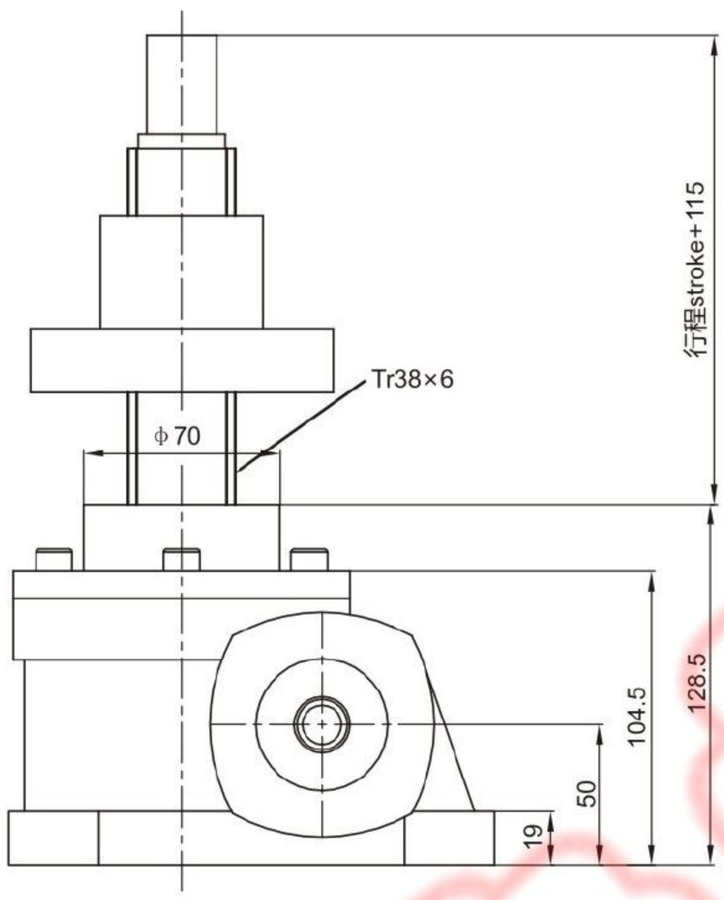

2B螺母在下
2B Inverted rotating screw

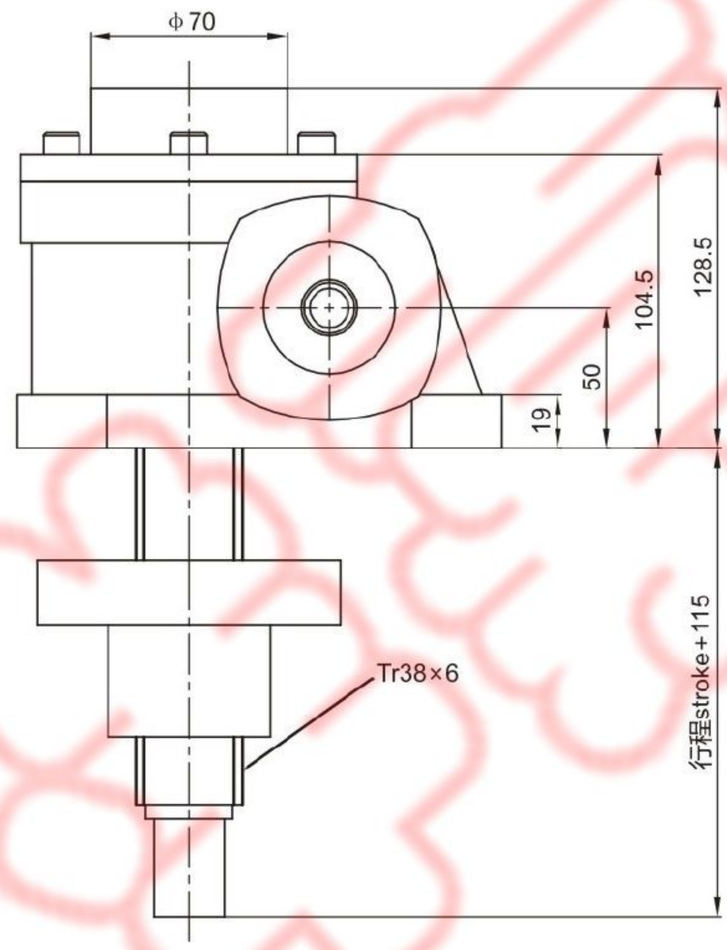

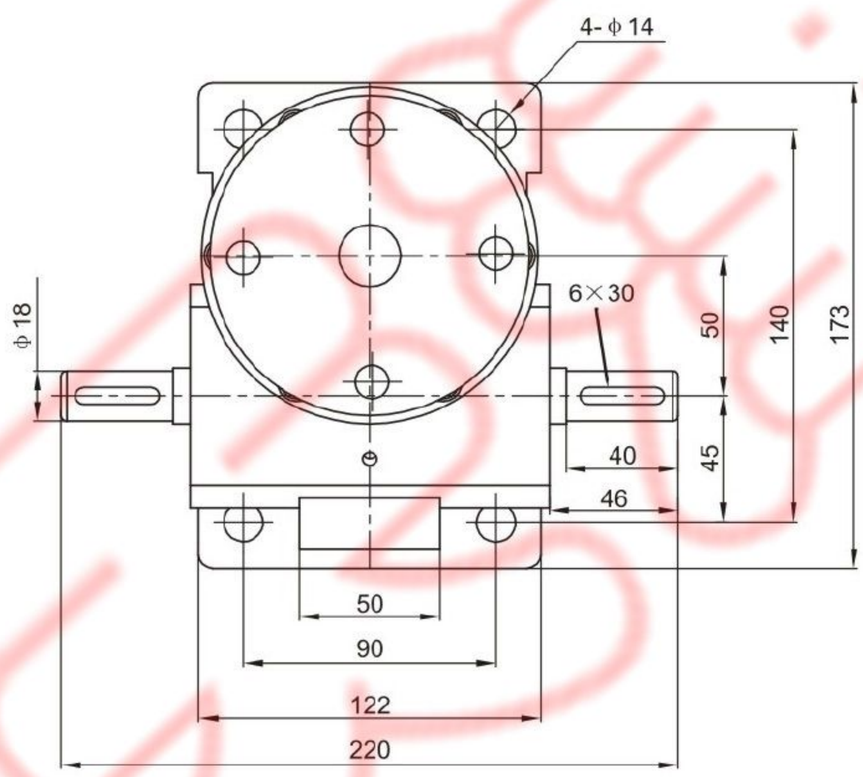

丝杆头部可选
Screw head optional

I型 / Type I

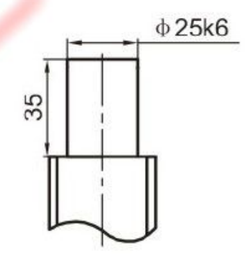

III型 / Type III

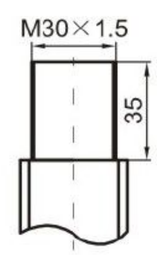

2型丝杆螺母
Type 2 screw nut

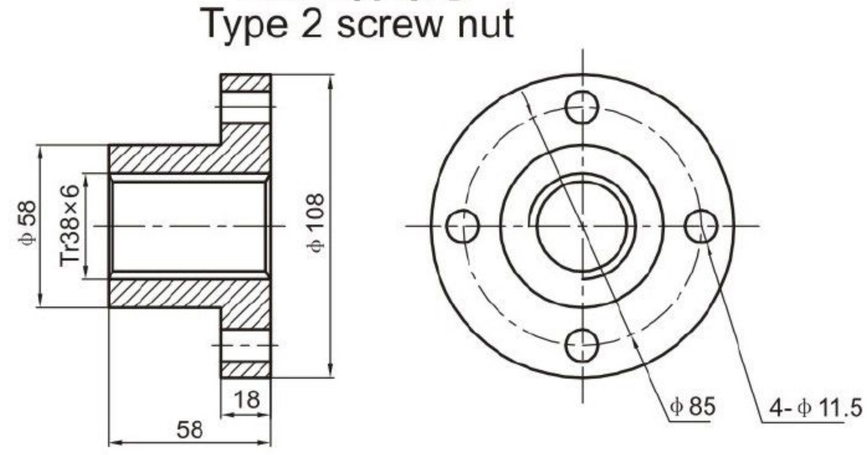

轴指向 Shaft Direction

常用轴指向 C Common axis pointing C	可选轴指向 B Optional axis pointing B	可选轴指向 A Optional axis pointing A
	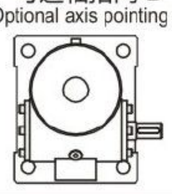	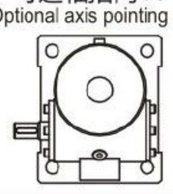

HK10T 2型结构 / HK10T type 2 structure

2A螺母在上
2A Upright rotating screw

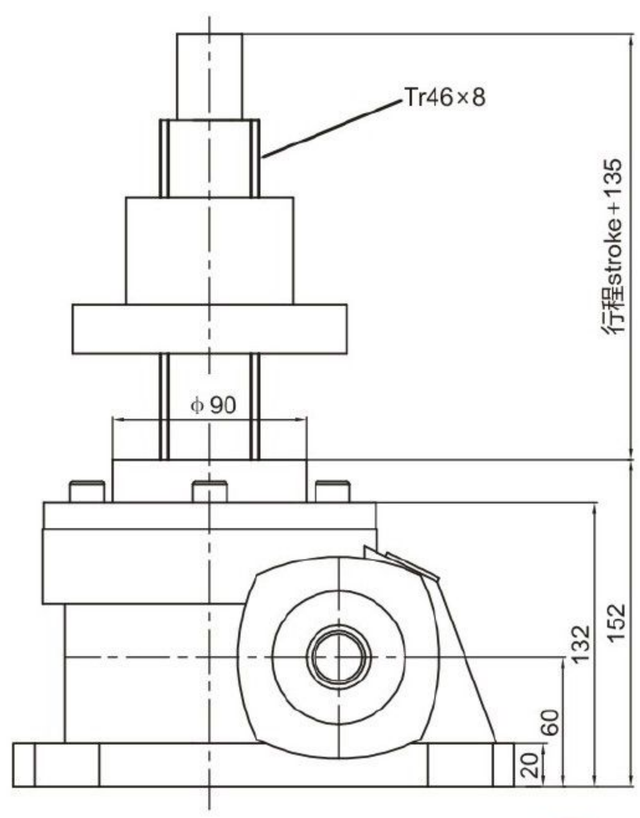

2B螺母在下
2B Inverted rotating screw

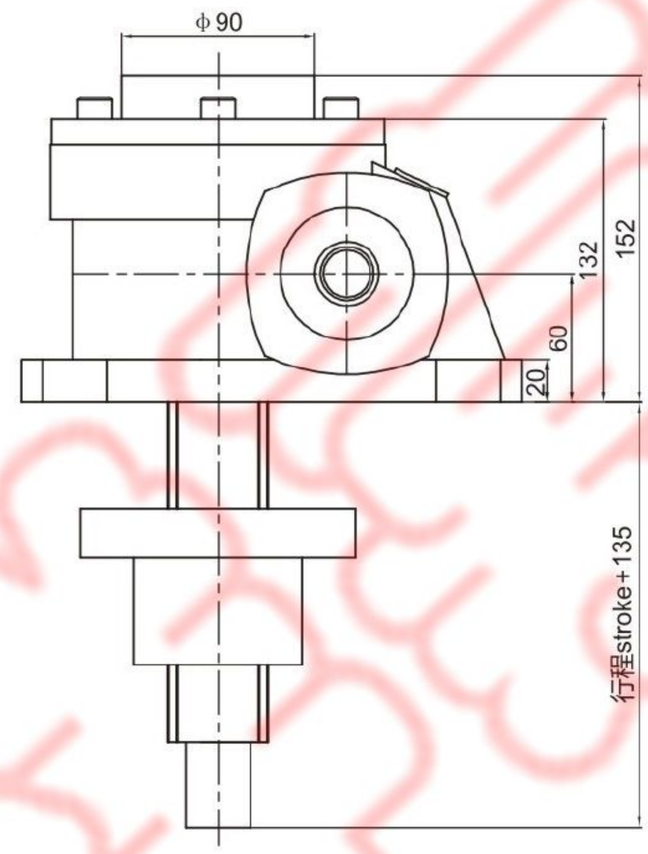

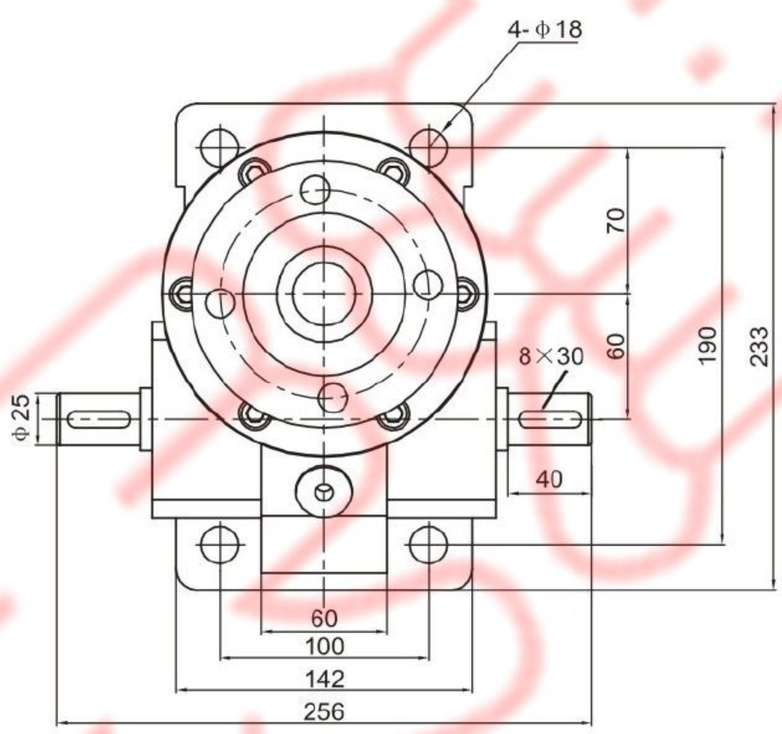

丝杆头部可选
Screw head optional

I型 / Type I

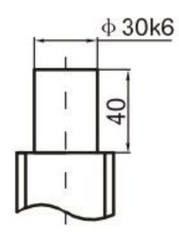

III型 / Type III

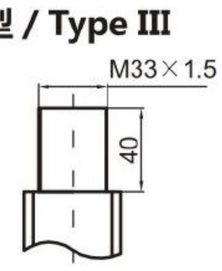

2型丝杆螺母
Type 2 screw nut

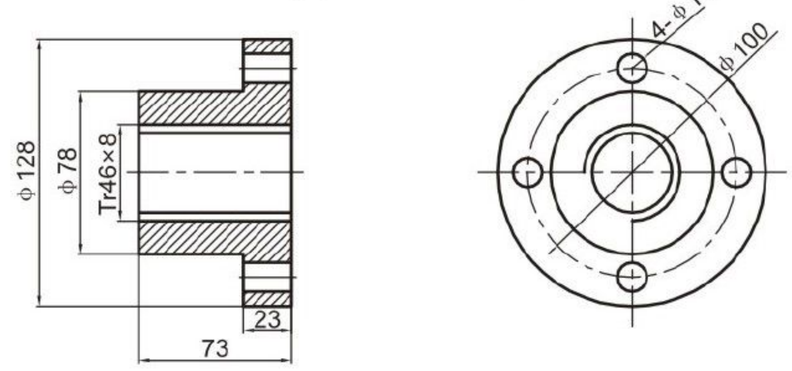

轴指向 Shaft Direction

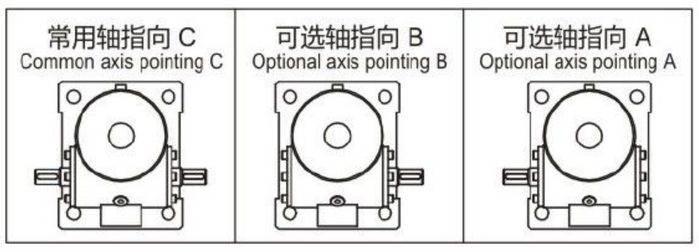

HK15T 2型结构 / HK15T type 2 structure

2A螺母在上
2A Upright rotating screw

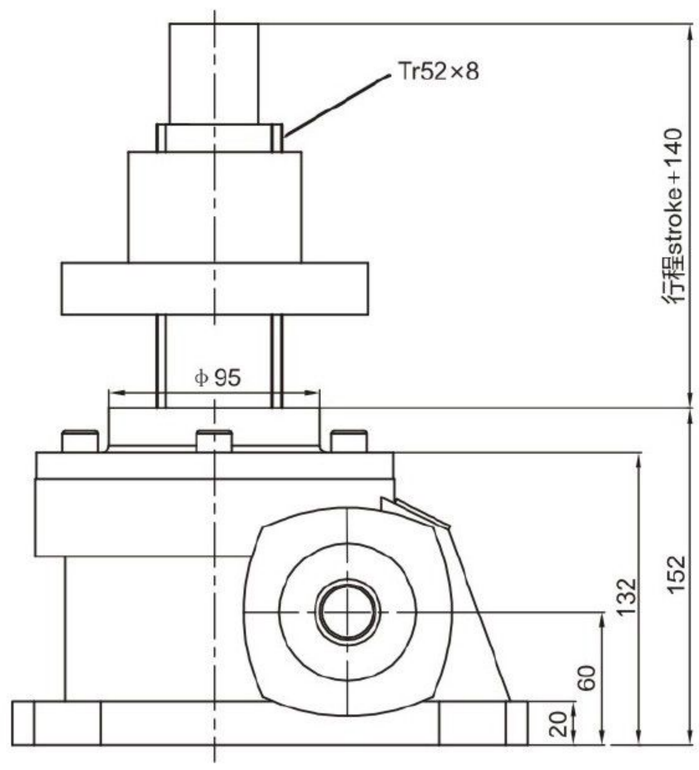

2B螺母在下
2B Inverted rotating screw

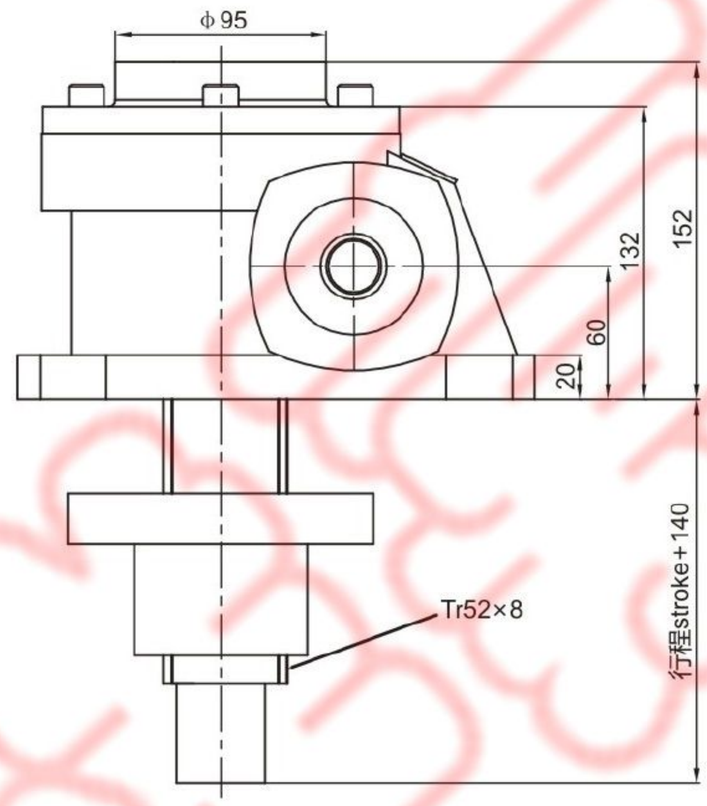

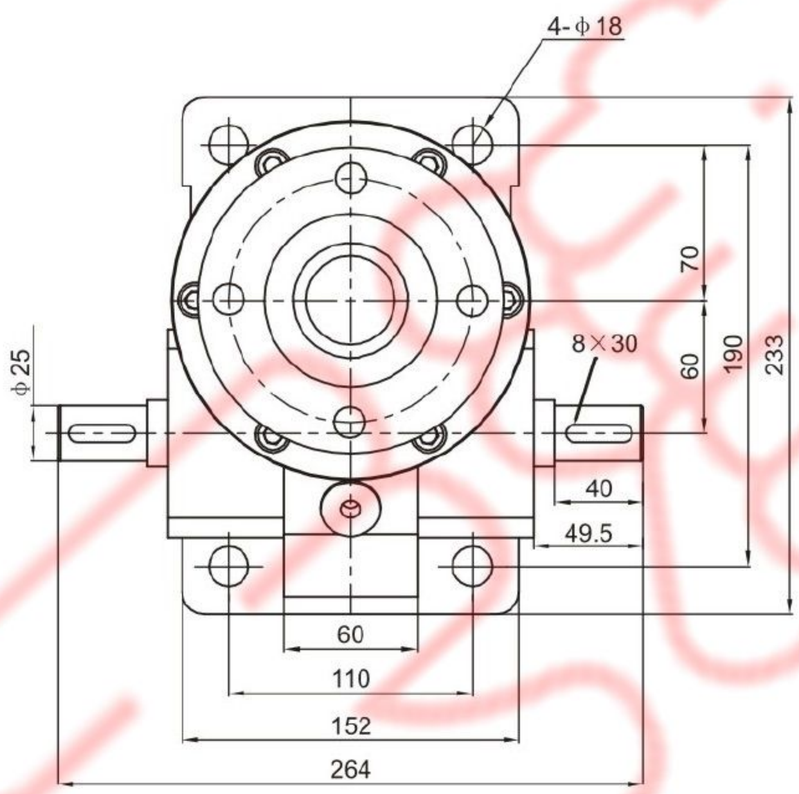

丝杆头部可选
Screw head optional

I型 / Type I

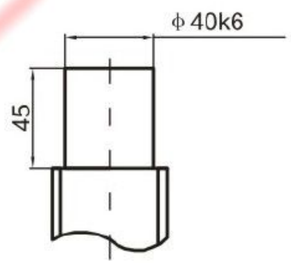

III型 / Type III

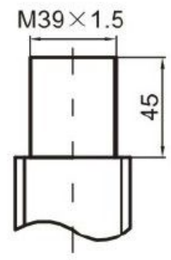

2型丝杆螺母
Type 2 screw nut

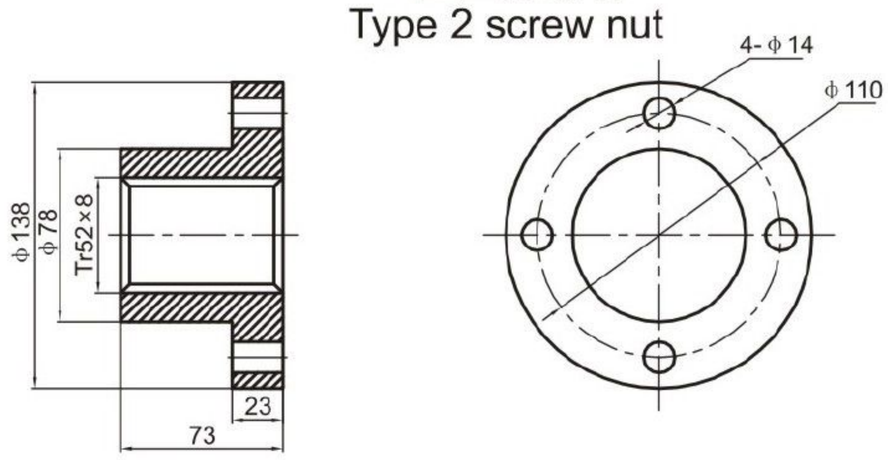

轴指向 Shaft Direction

常用轴指向 C Common axis pointing C	可选轴指向 B Optional axis pointing B	可选轴指向 A Optional axis pointing A
	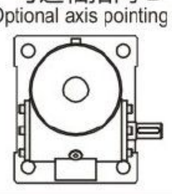	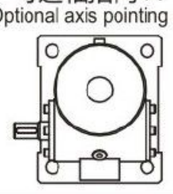

HK20T 2型结构 / HK20T type 2 structure

2A螺母在上
2A Upright rotating screw

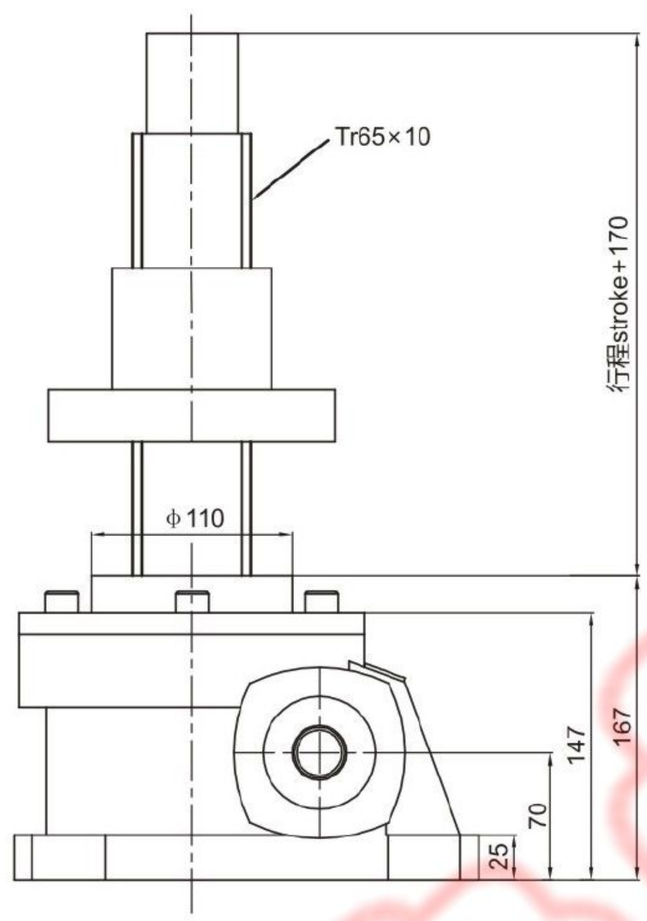

2B螺母在下
2B Inverted rotating screw

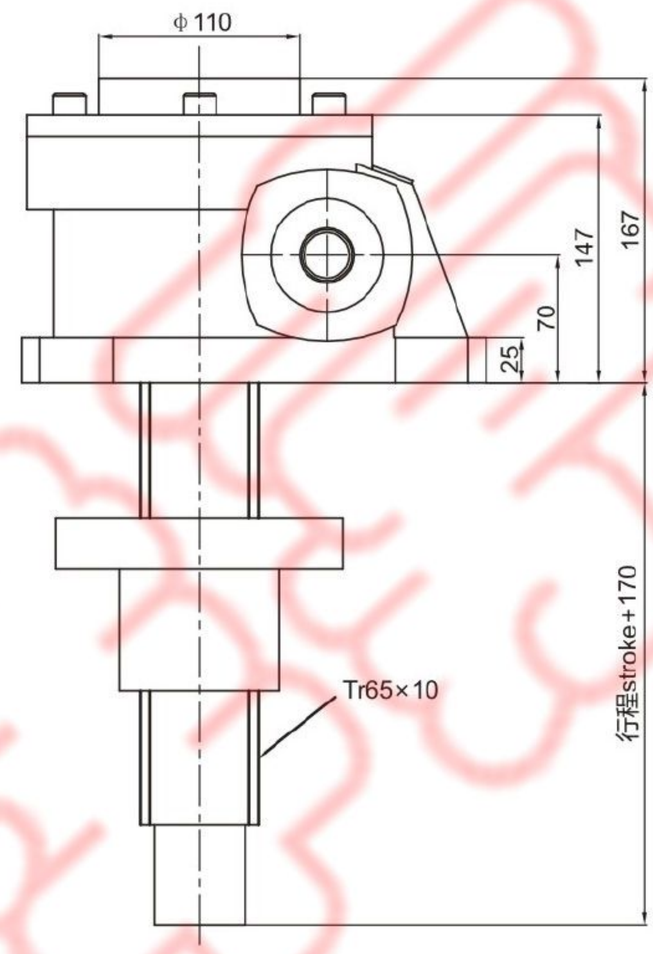

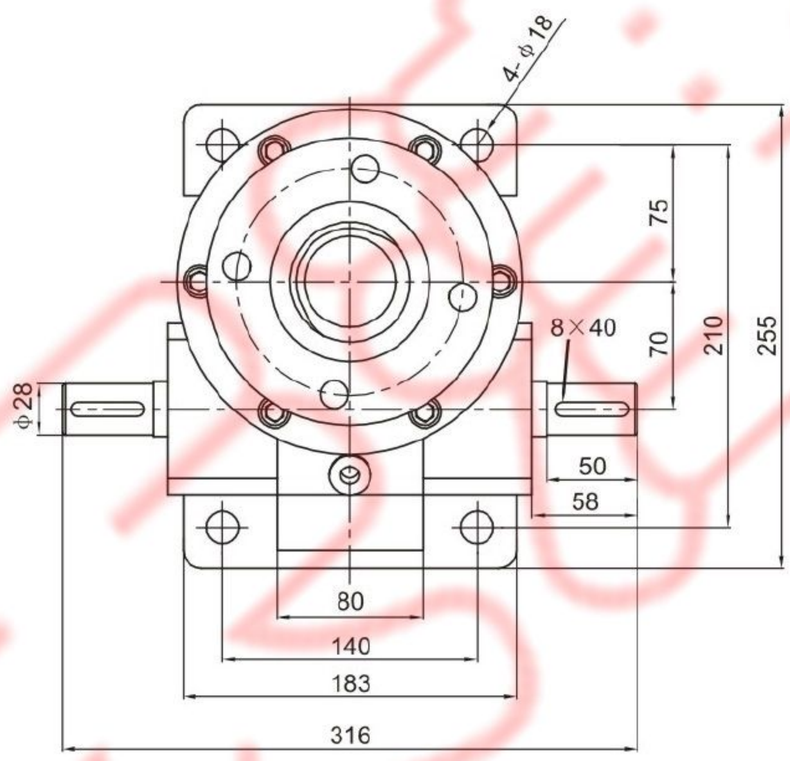

丝杆头部可选
Screw head optional

I型 / Type I

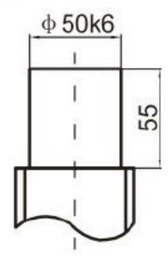

III型 / Type III

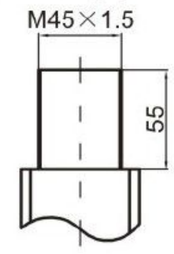

2型丝杆螺母
Type 2 screw nut

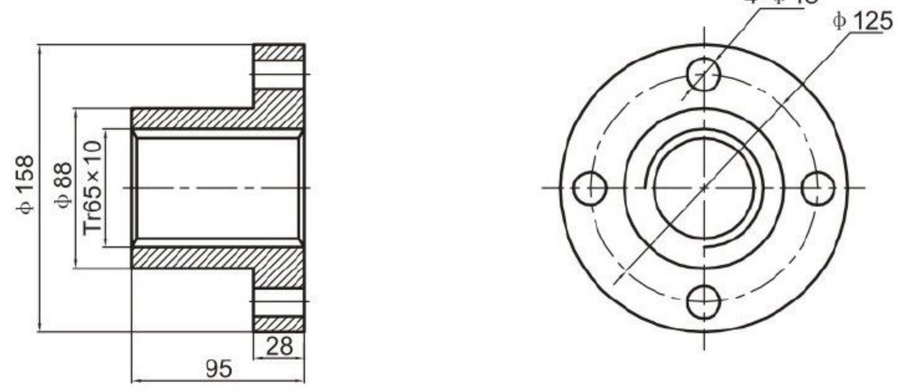

轴指向 Shaft Direction

常用轴指向 C Common axis pointing C	可选轴指向 B Optional axis pointing B	可选轴指向 A Optional axis pointing A
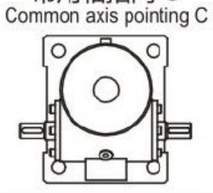	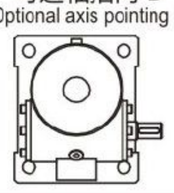	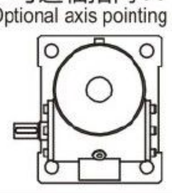

HK30T 2型结构 / HK30T type 2 structure

2A螺母在上
2A Upright rotating screw

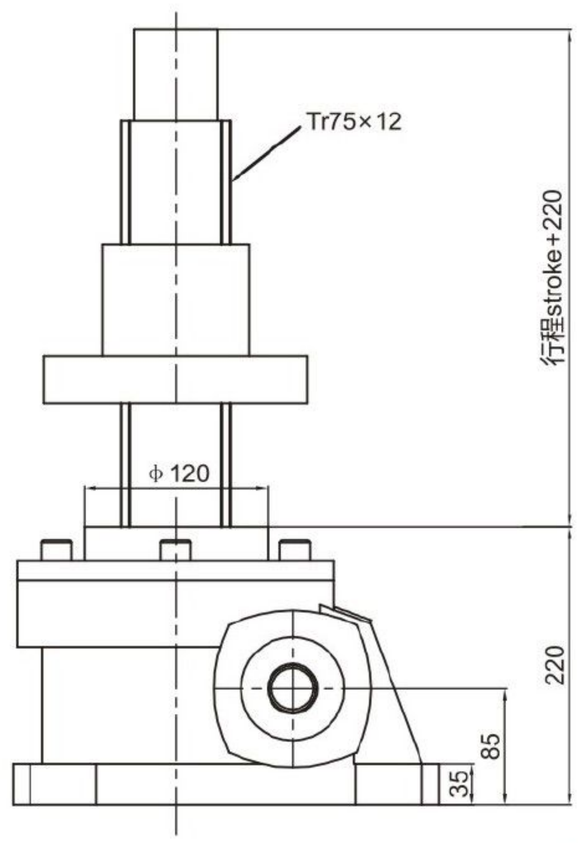

2B螺母在下
2B Inverted rotating screw

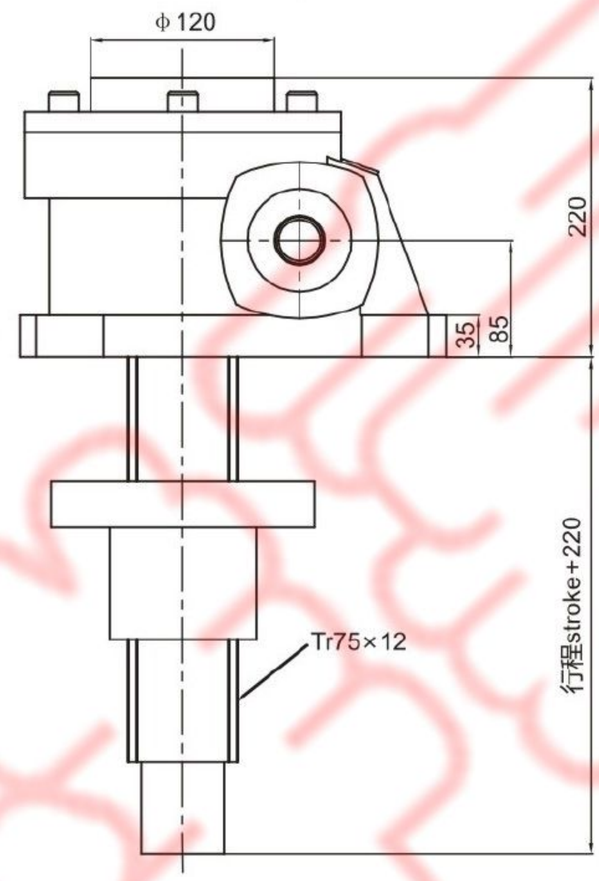

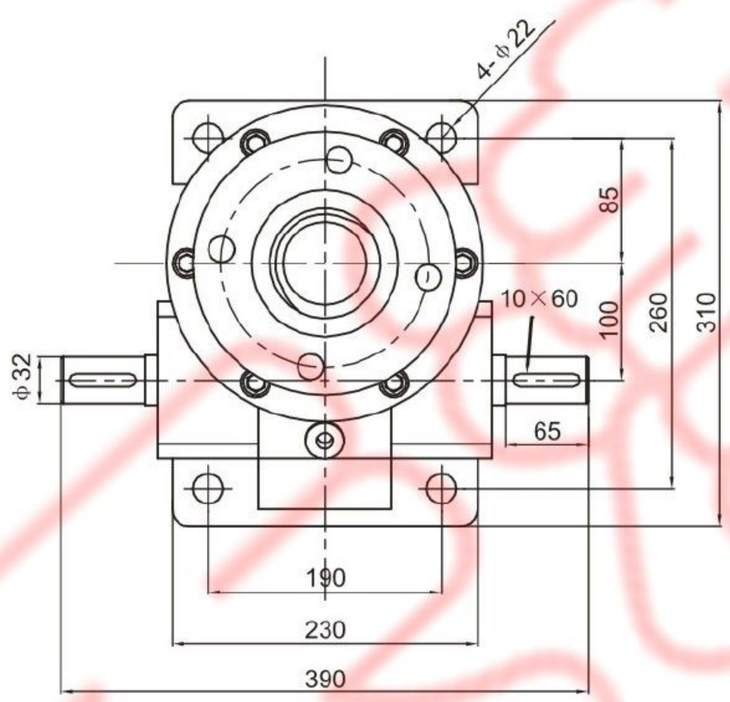

丝杆头部可选
Screw head optional

I型 / Type I

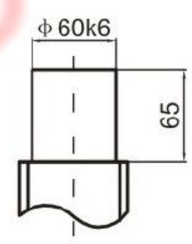

III型 / Type III

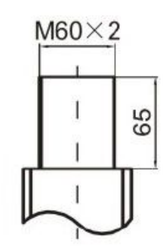

2型丝杆螺母
Type 2 screw nut

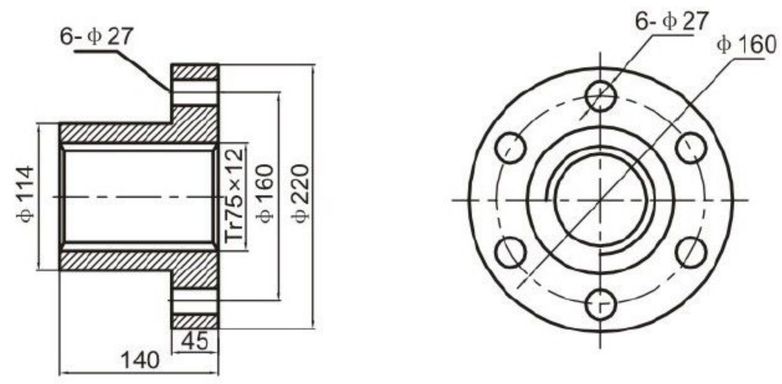

轴指向 Shaft Direction

常用轴指向 C Common axis pointing C	可选轴指向 B Optional axis pointing B	可选轴指向 A Optional axis pointing A
	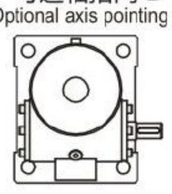	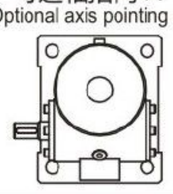

HK40T 2型结构 / HK40T type 2 structure

2A螺母在上
2A Upright rotating screw

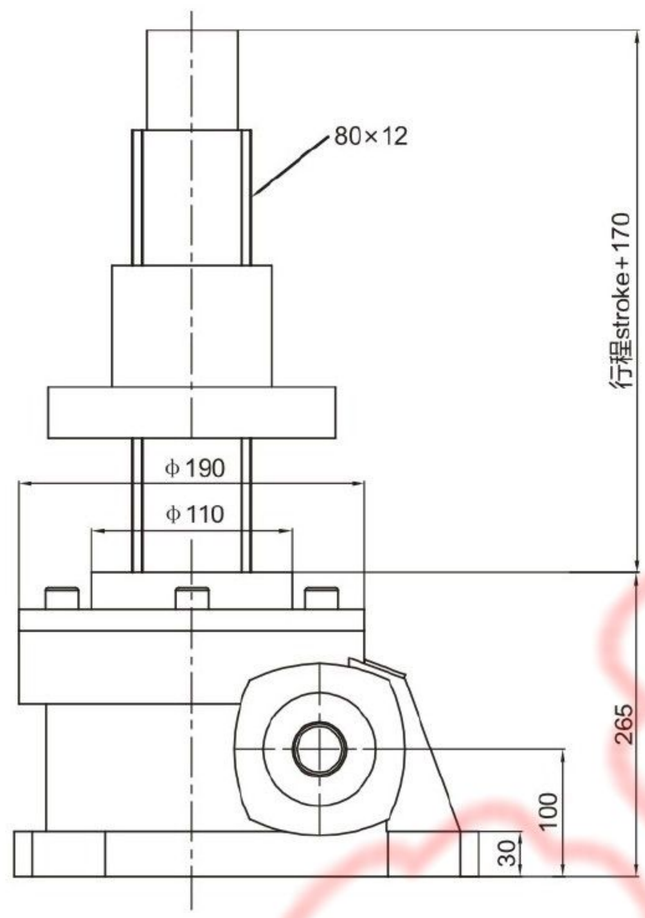

2B螺母在下
2B Inverted rotating screw

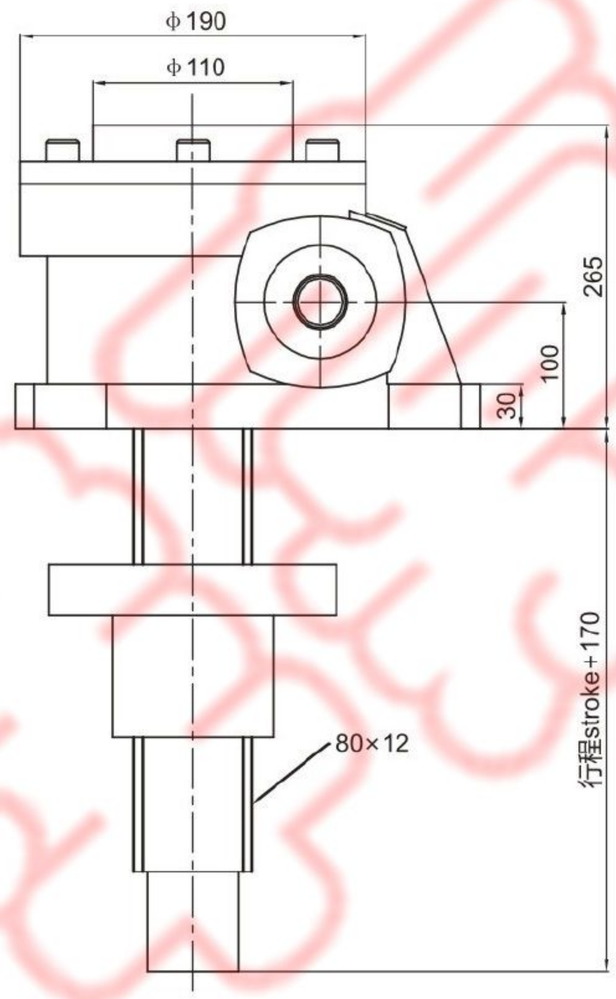

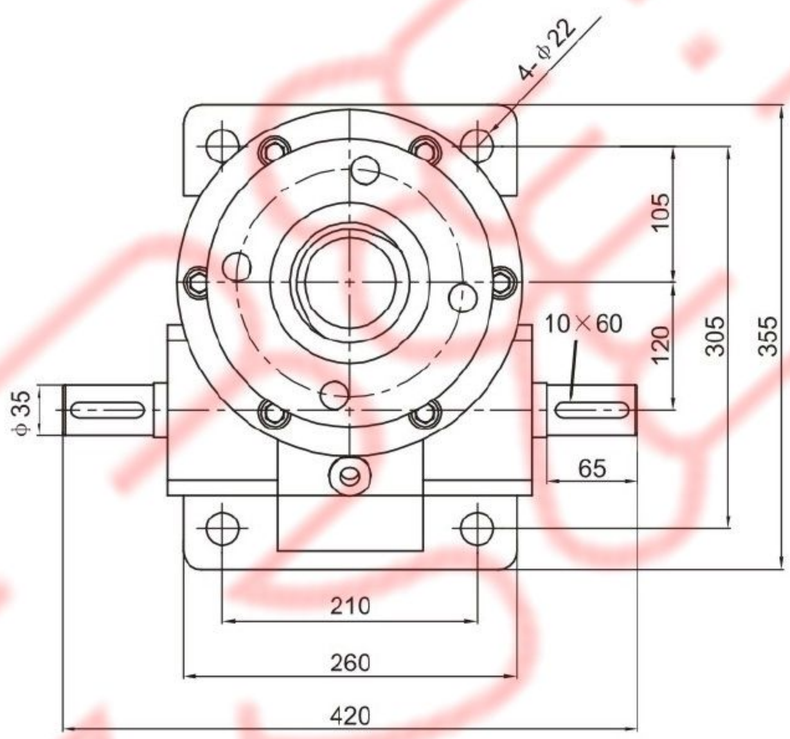

丝杆头部可选
Screw head optional

I型 / Type I

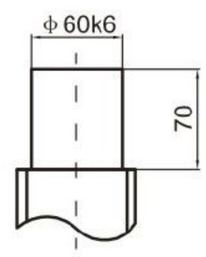

III型 / Type III

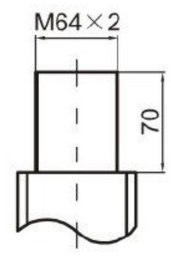

2型丝杆螺母
Type 2 screw nut

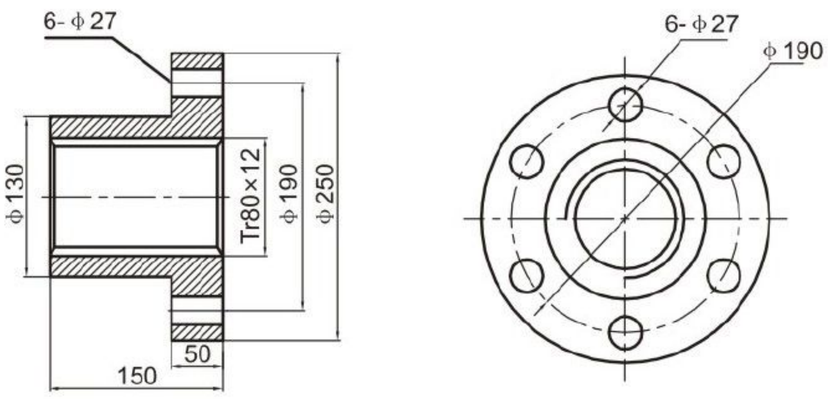

轴指向 Shaft Direction

常用轴指向 C Common axis pointing C	可选轴指向 B Optional axis pointing B	可选轴指向 A Optional axis pointing A
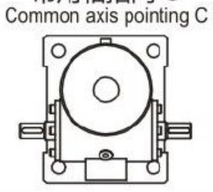	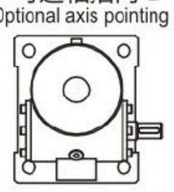	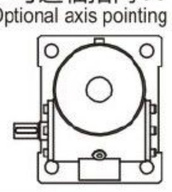

HK50T 2型结构 / HK50T type 2 structure

2A螺母在上
2A Upright rotating screw

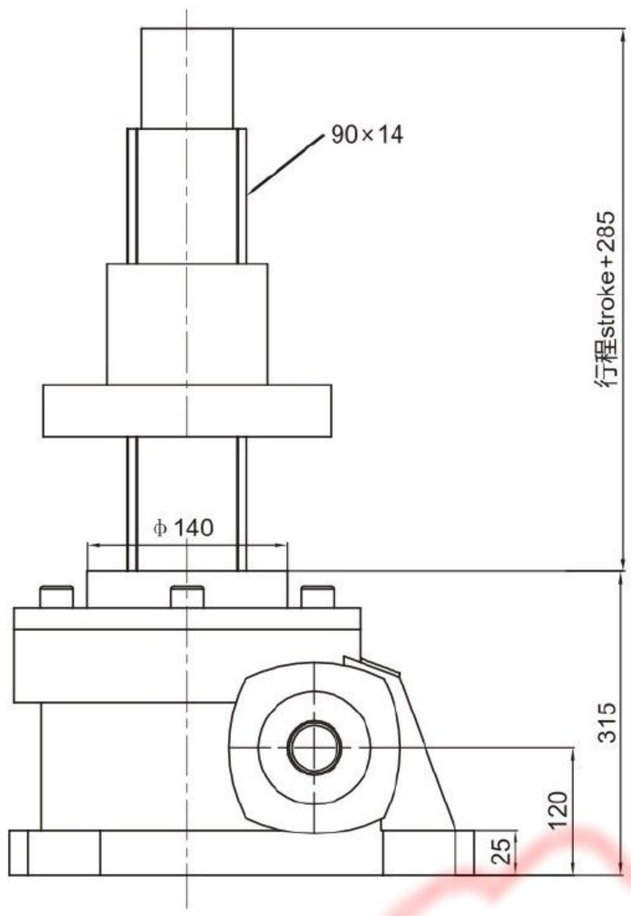

2B螺母在下
2B Inverted rotating screw

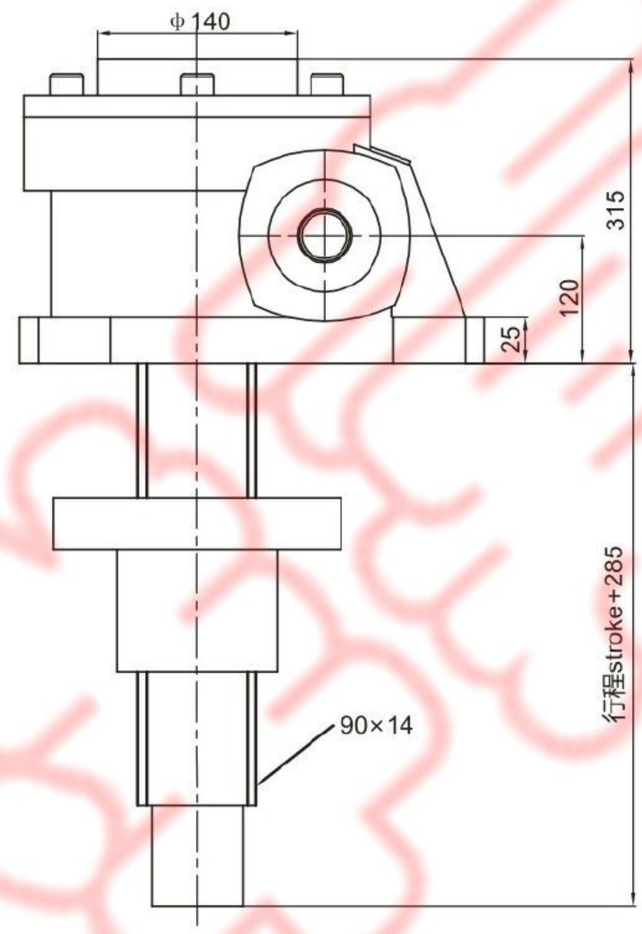

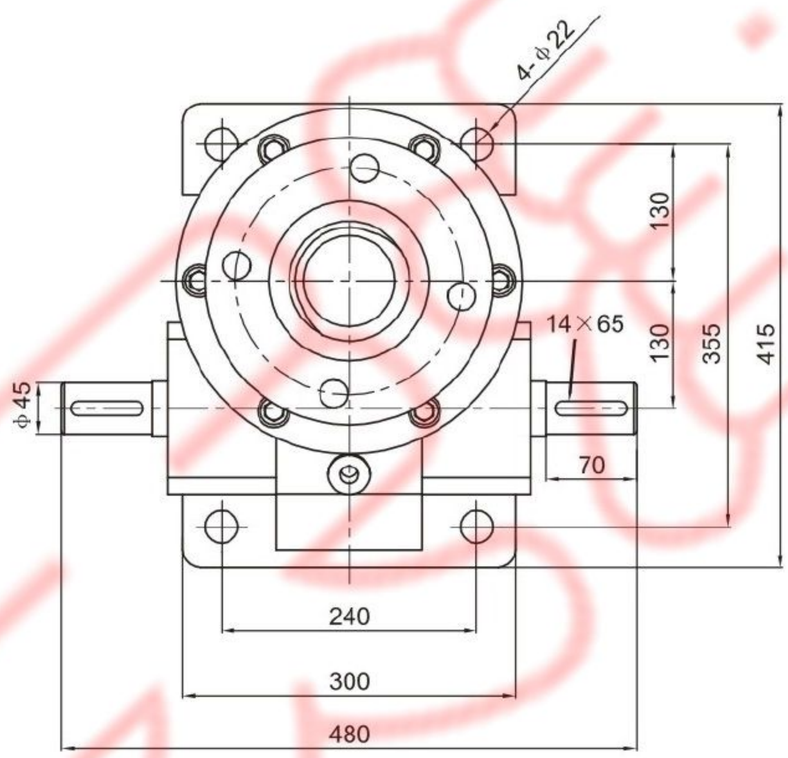

丝杆头部可选
Screw head optional

I型 / Type I

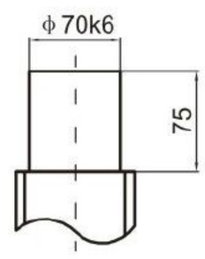

III型 / Type III

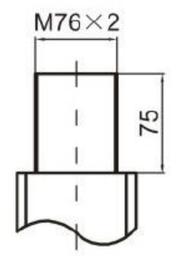

2型丝杆螺母
Type 2 screw nut

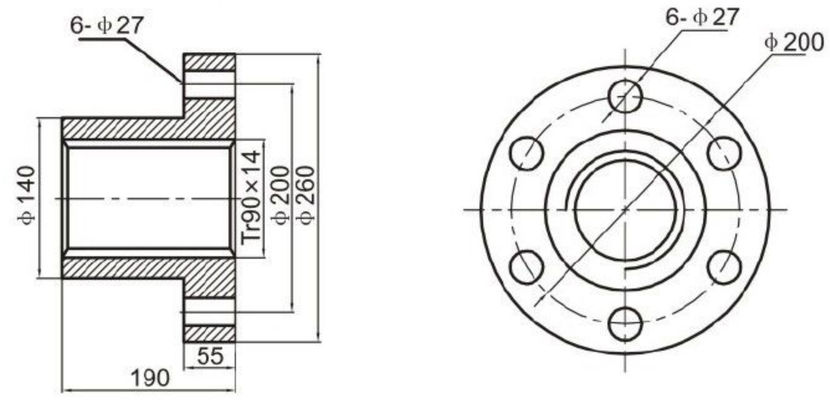

轴指向 Shaft Direction

常用轴指向 C Common axis pointing C	可选轴指向 B Optional axis pointing B	可选轴指向 A Optional axis pointing A
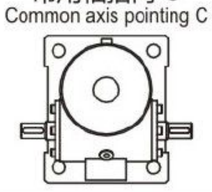	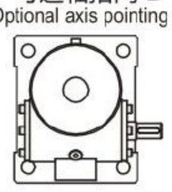	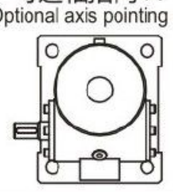

HK100T 2型结构 / HK100T type 2 structure

2A螺母在上
2A Upright rotating screw

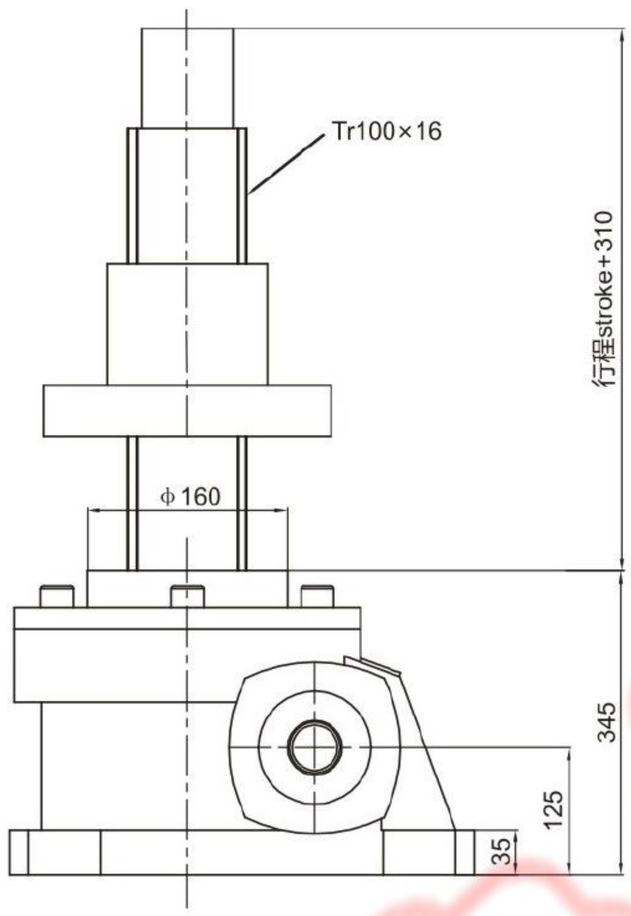

2B螺母在下
2B Inverted rotating screw

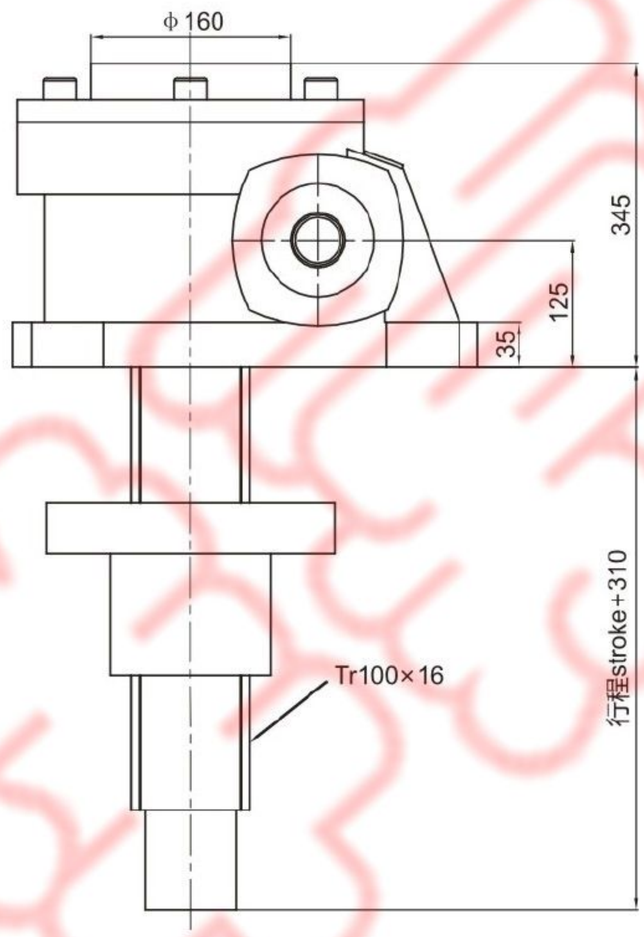

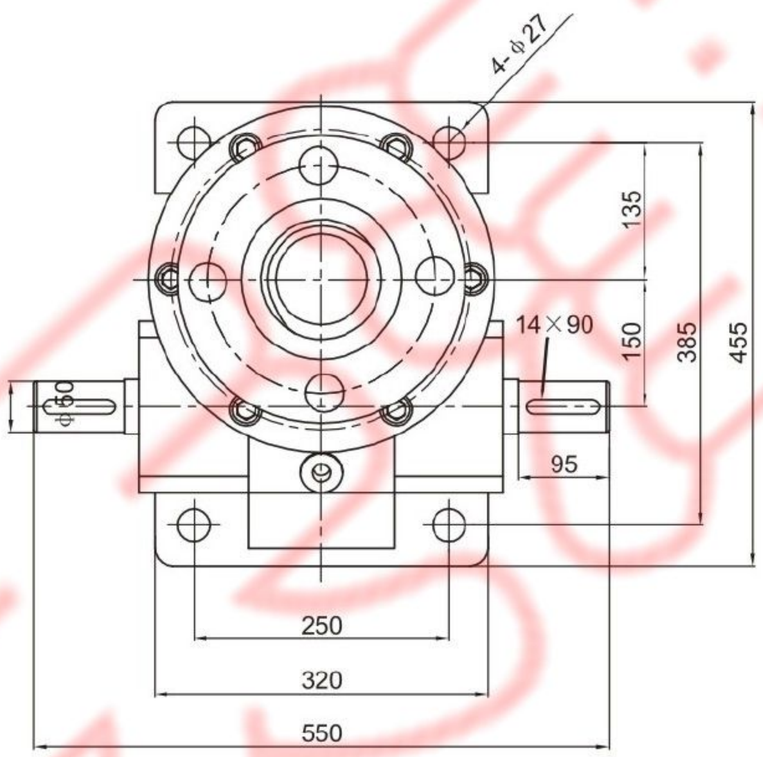

丝杆头部可选
Screw head optional

I型 / Type I

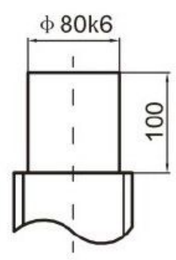

III型 / Type III

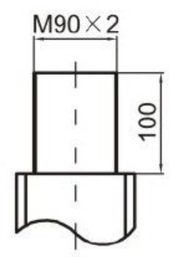

2型丝杆螺母
Type 2 screw nut

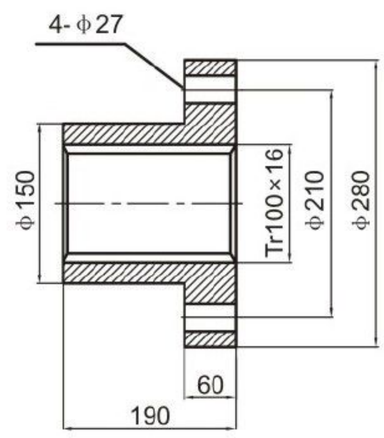

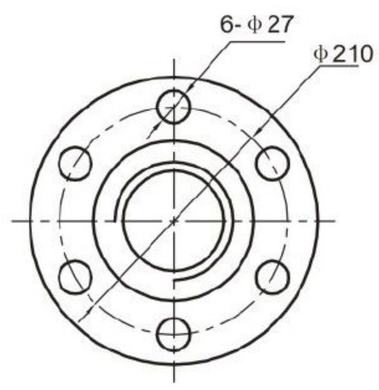

轴指向 Shaft Direction

常用轴指向 C	可选轴指向 B	可选轴指向 A
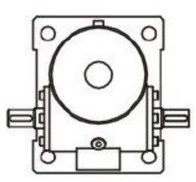	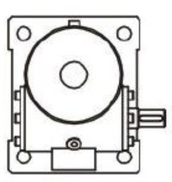	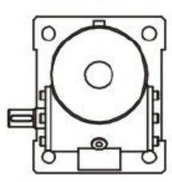

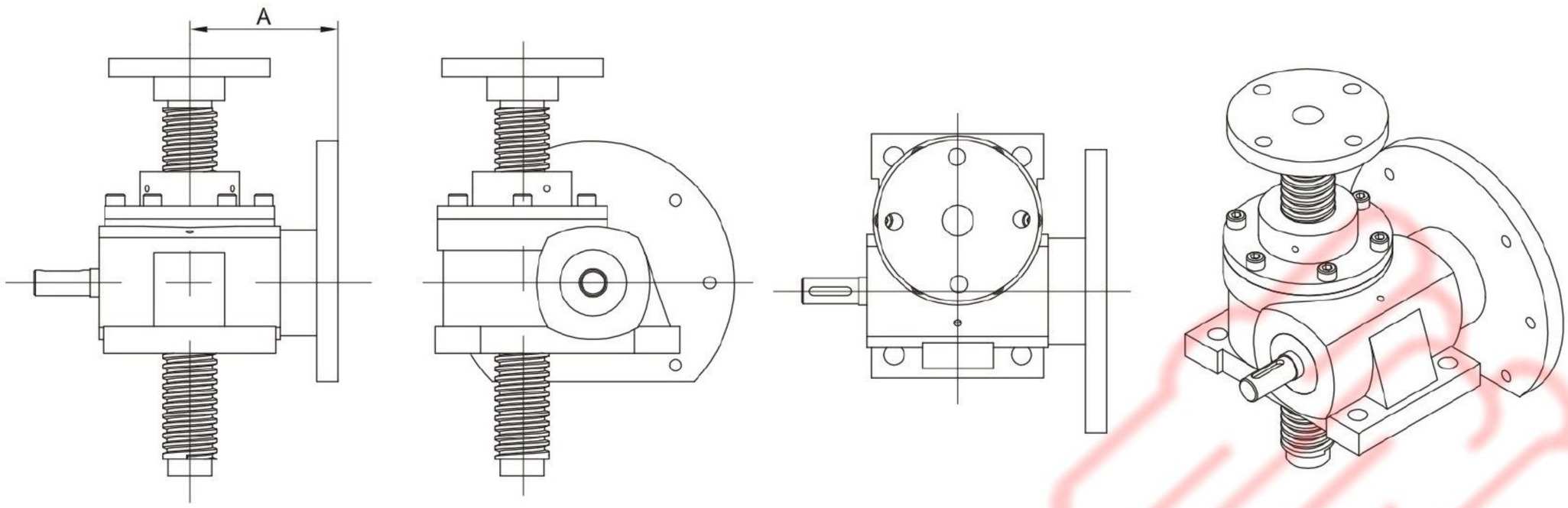

DHK系列型号 DHK series model	+	可选IEC电机法兰型号 Optional IEC motor flange type		A
DHK2T	+	71B5	71B14	76
DHK3T	+	71B5	71B14	91
DHK5T	+	80B5	80B14	105
DHK10T	+	90B5	90B14	125
DHK15T	+	90B5	90B14	125
DHK20T	+	90B5	90B14	142.5

DHK 5T - 6 - 1 - A - II - 100 - FZ - C - 71B5 + 电机型号 / Motor model

1 2 3 4 5 6 7 8 9 10 11

1. DHK：系列号，DHK系列-蜗轮+T型丝杆升降机，带IEC电机接口型；
2. 5T：型号，以升降机的静载能力作为型号；主要有：2T，3T，5T，10T，15T，20T，30T，40T，50T，100T;
3. 6：升降机速比；
4. 1：结构型号；1型：螺母作旋转运动、丝杆作轴向运动（本页展示的产品均为I型）；2型：丝杆作旋转运动、螺母作轴向运动；
5. A：装配型式；A型：丝杆（或螺母）向上（安装面）移动；B型：丝杆（或螺母）向下（安装面）移动；
6. T：丝杆头部型式：1型丝杆头部分为I型（圆柱型）、II型（法兰型）、III型（螺纹型）、IV型（扁头型）四种；
   2型丝杆头部分为I型（圆柱型）、III型（螺纹型）；
7. 100：升降行程；客户自定义；
8. FZ：丝杆的防旋和防护；
   1型结构有基本型、防旋转型（F-键防旋）和带防护罩型
   （Z钢管防护-被动侧，X伸缩管防护-主动侧，Q两种都有）；
   2型结构有基本型和带防护罩型（X伸缩管防护-主动侧）；
9. C：轴指向A；B；C；D；
10. 71B5：IEC 输入接盘型号；
11. 电机型号：需要我司配电机时填写，电机型号参数；

1. DHK: serial number, DHK series - worm gear + T type screw lift, with IEC motor interface type;
2. 5T: model, with the static load capacity of the lift as the model; mainly: 2T, 3T, 5T, 10T, 15T, 20T, 30T, 40T, 50T, 100T;
3. 6: elevator speed ratio;
4. 1: Structural model; Type 1: nut for rotary motion, screw for axial movement (products shown on this page are type I);
   Type 2: screw for rotary motion, nut for axial movement;
5. A: assembly type; type A: the screw (or nut) moves up (mounting surface); type B: the screw (or nut) moves down (mounting surface);
6. T: screw head type: 1 type screw head is divided into I type (cylindrical type), type II (flange type), type III (thread type), type IV (flat head type);
   2 type screw head is divided into I type (cylindrical type) and type III (thread type);
7. 100: lifting stroke; customer customization;
8. FZ: anti-rotation and protection of the screw;
   Type 1 structure has basic type, anti-rotation type (F-key anti-rotation) and protective cover type(Z steel pipe protection - passive side, X telescopic tube protection - active side, Q both);
   Type 2 structure has basic type and protective cover type (X telescopic tube protection - active side);
9. C: the axis points to A; B; C; D;
10. 71B5: IEC input patch model;
11. Motor model: need to fill in the motor when we are equipped with the motor model parameters;

轴指向 Shaft Direction

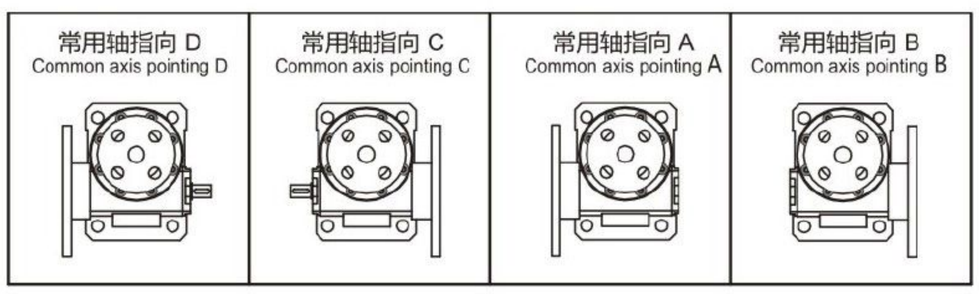

B5 Electric Motors Dimension

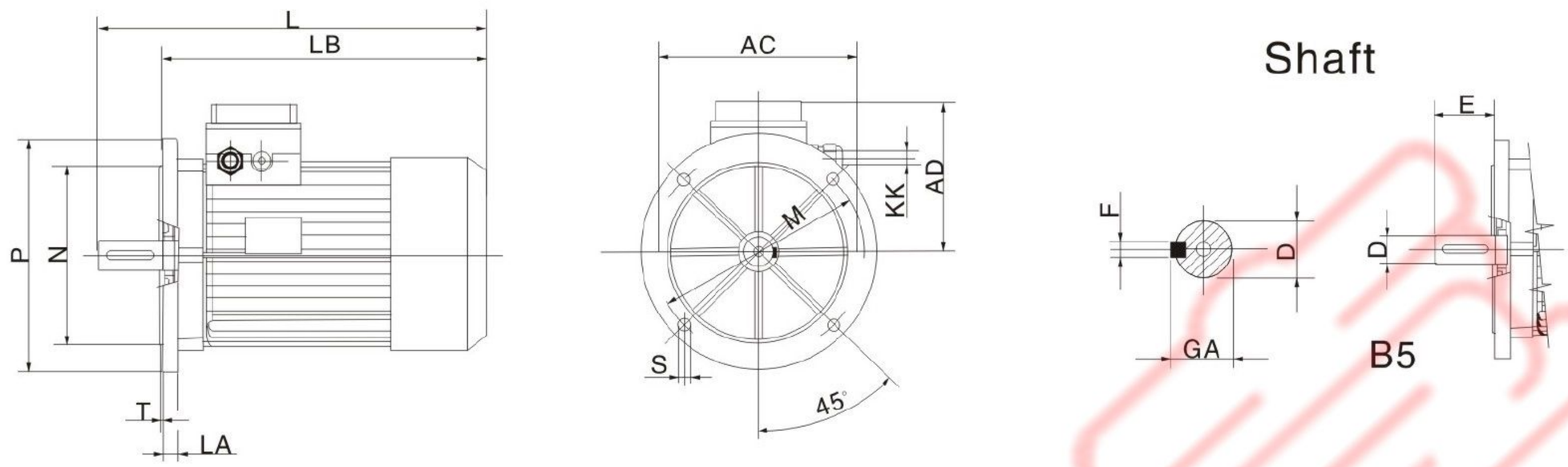

Motor	Overall dim.					Flange B5						Shaft			
	AC	AD	L	LB	KK	M	Nj6	P	LA	S(Ø)	T	D(Ø)	E	F	GA
56	110	96	189	169	M16X1,5	100	80	120	10	7	3	9 M4	20	3	10,2
63	122	96	218	195	M16X1,5	115	95	140	10	9	3	11 M4	23	4	12,5
71	145	125	255	225	M20X1,5	130	110	160	13	10	3,5	14 M5	30	5	16
80	165	135	295	255	M20X1,5	165	130	200	13	12	3,5	19 M6	40	6	21,5
90S	185	145	310	260	M25X1,5	165	130	200	13	12	3,5	24 M8	50	8	27
90L	185	145	335	285	M25X1,5	165	130	200	15	12	3,5	24 M8	50	8	27
100	215	170	380	320	M25X1,5	215	180	250	15	15	4	28 M10	60	8	31
112	240	180	400	340	M25X1,5	215	180	250	15	15	4	28 M10	60	8	31
132S	275	210	470	390	M25X1,5	265	230	300	15	15	4	38 M12	80	10	41
132M	275	210	510	430	M25X1,5	265	230	300	15	15	4	38 M12	80	10	41

B14 Electric Motors Dimension

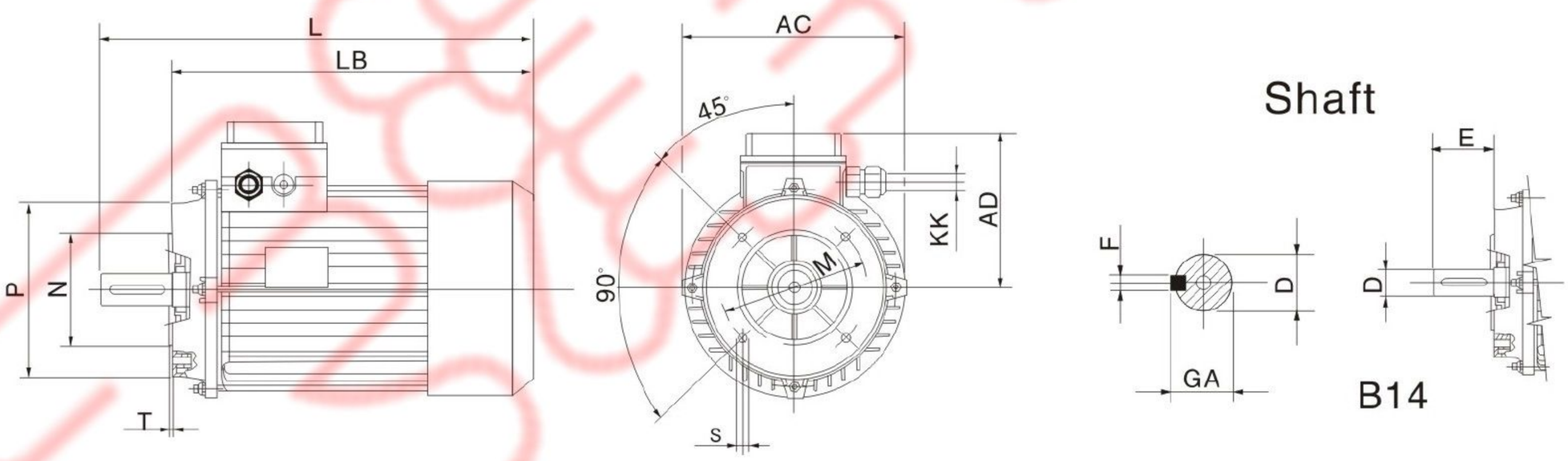

Motor	Overall dim.					Flange B5						Shaft			
	AC	AD	L	LB	KK	M	Nj6	P	LA	S(Ø)	T	D(Ø)	E	F	GA
56	110	96	189	169	M16X1,5	65	50	80		M5	3	9 M4	20	3	10,2
63	122	96	218	195	M16X1,5	75	60	90		M5	3	11 M4	23	4	12,5
71	145	125	255	225	M20X1,5	85	70	105		M6	3	14 M5	30	5	16
80	165	135	295	255	M20X1,5	100	80	120		M6	3	19 M6	40	6	21,5
90S	185	145	310	260	M25X1,5	115	95	140		M8	3	24 M8	50	8	27
90L	185	145	335	285	M25X1,5	115	95	140		M8	3	24 M8	50	8	27
100	215	170	380	320	M25X1,5	130	110	160		M8	4	28 M10	60	8	31
112	240	180	400	340	M25X1,5	130	110	160		M8	4	28 M10	60	8	31
132S	275	210	470	390	M25X1,5	165	130	200		M10	5	38 M12	80	10	41
132M	275	210	510	430	M25X1,5	165	130	200		M10	5	38 M12	80	10	41

2017版

©2017 DONGKING DRIVE 版权所有 翻印必究

天津市祥嘉减速机械有限公司

Tianjin Xiangjia reducer Co. LTD

天津南开区密云路北方城 2 区 6 栋 130 号

No. 130, Building 6, Area 2, North Fangcheng, Miyun Road, Nankai District, Tianjin

邮　编：300112

邮　箱：jsj@tjxiangjia.com

电　话：022-27368677　27340469

传　真：022-27368677　27257226

有关本公司产品目录的内容，随着技术进步等，将会有变更，望谅解！

Along with the technology advanced etc., the product of the manual of DONGKING will be changed, please forgive.