V-FLO®

ZLB(Q)

Vertical Axial Flow Pump

V-FLO PUMPS & SYSTEMS COMPANY LIMITED

WWW.V-FLO.COM

ZLB(Q)

Vertical Axial Flow Pump

ZLB(Q) Series are vertical axial flow pumps designed for water supply and drainage applications in industrial, municipal and agricultural irrigation projects including metallurgy, mining, chemical, power plants and water level regulation in shipyard docks etc.. Applicable to clean water, rain water, sewage and sea water with temperature up to 50℃.

Construction
Installations: allowable in single foundation direct coupling or double foundations vertical mounting. A complete unit shall include one (1) pump, one (1) driving system, one (1) set of special tools and one (1) set of check valves.
Options: Motor; 30° elbow, column, pull-out column, diffuser column; spare parts; electric controls; sewage grid and scrapers.

Performance Data
Capacity Range: 147 ~ 18000 m^3/h
Head Range: 1.7 ~ 13 m
Speed Range: 347 ~ 1450 rpm

Model Nomenclature

e.g.: Model 350ZLB(Q) – 70A(DP)
350 — Discharge Dia. (mm)
ZL — Vertical Axial Flow Pump
B — Semi-adjustable Impeller Vane, Q for Full Adjustable
70 — 1/10 of specific Speed
A — Variation, DP for Direct Coupling

Configuration Drawings

ZLB

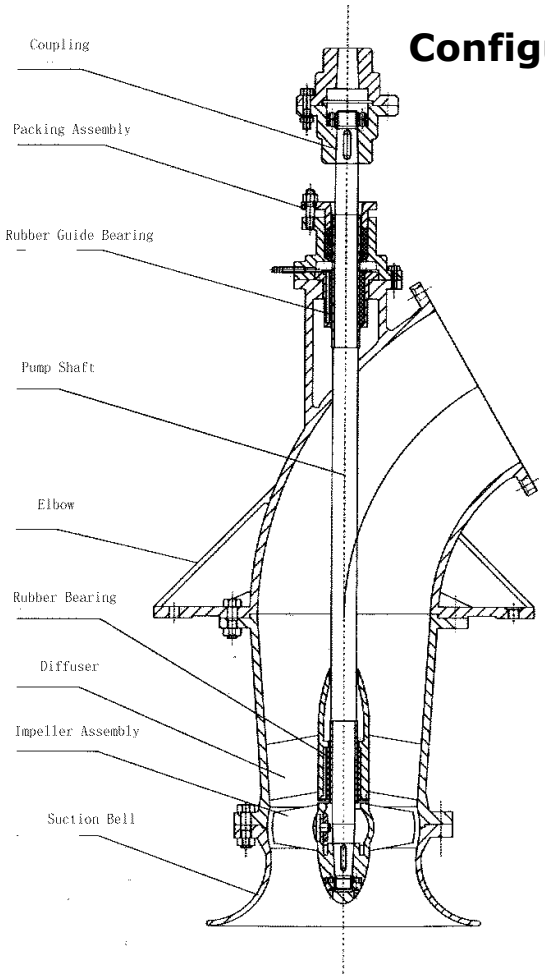

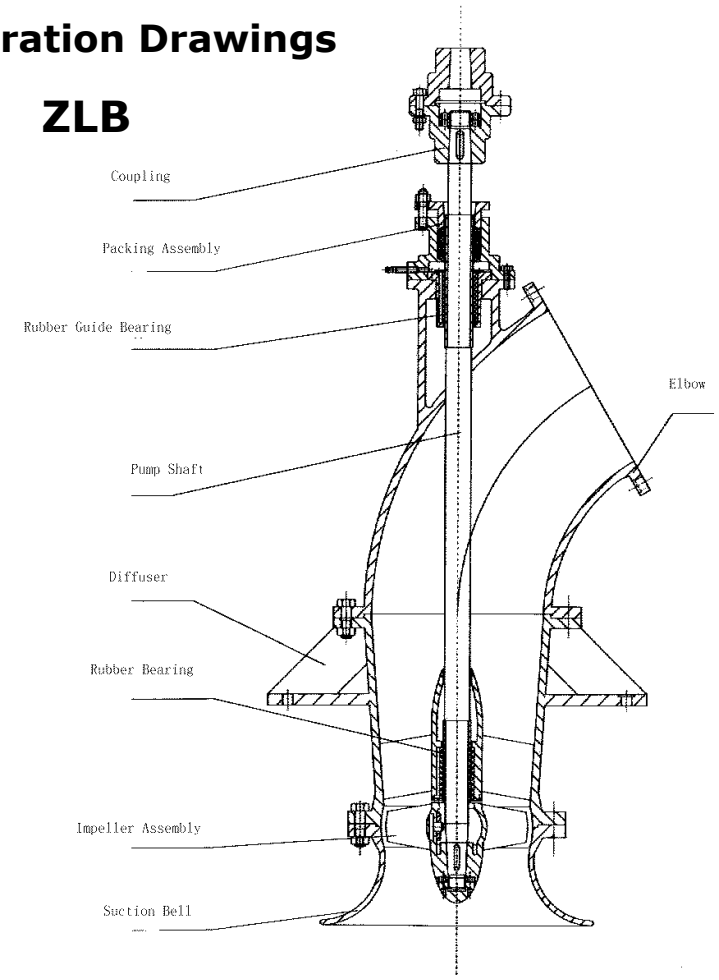

Configuration Drawings

ZLB - DP

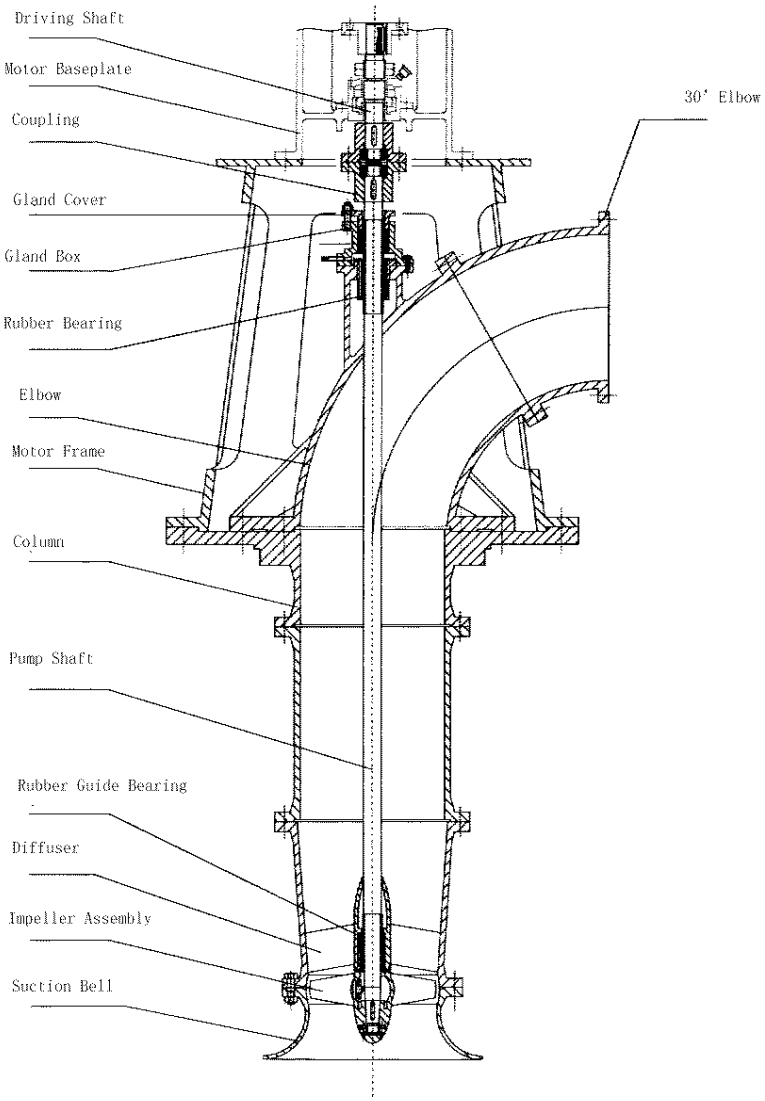

ZLB(Q)

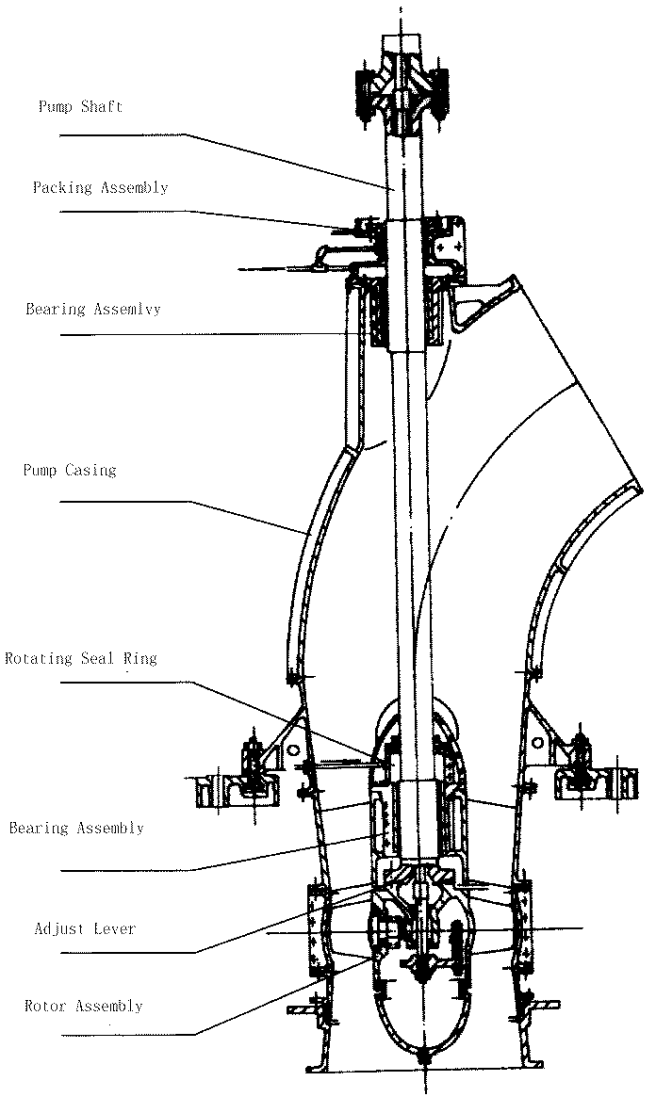

Performance Data Charts & Curves

350ZLB-70(DP)

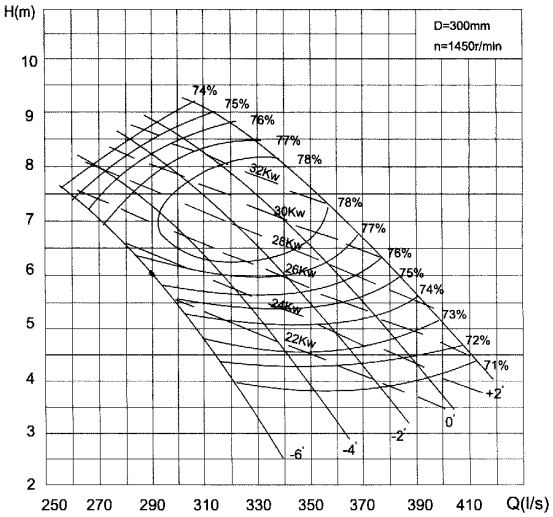

Angle of Vanes	Capacity Q		Head H	Speed n	Power N(kW)		Impeller Dia. (mm)	Eff. η
	m^3/h	l/s	(m)	(r/min)	Shaft Power	Motor Power		(%)
+2°	1224	340	8.2	1450	34.9	37	300	78.4
	1274	354	7.45		33.1			78.1
	1415	393	5.5		28.6			74.2
0°	1152	320	7.95		31.6			78.8
	1210	336	7.22		29.9			79.5
	1350	375	5.2		25.5			75
-2°	1112	309	7.63		29.3	30		79
	1159	322	7.07		28.2			79.2
	1318	366	4.5		22.4			72.1
-4°	1030	286	7.6		27.3			78
	1048	301	6.79		28.5			78.54
	1206	335	4.8		21.4			73.8
-6°	972	270	7.1		24.3			77.4
	1015	282	6.53		23.1			78.4
	1116	310	4.7		19.6			73

350ZLB-100

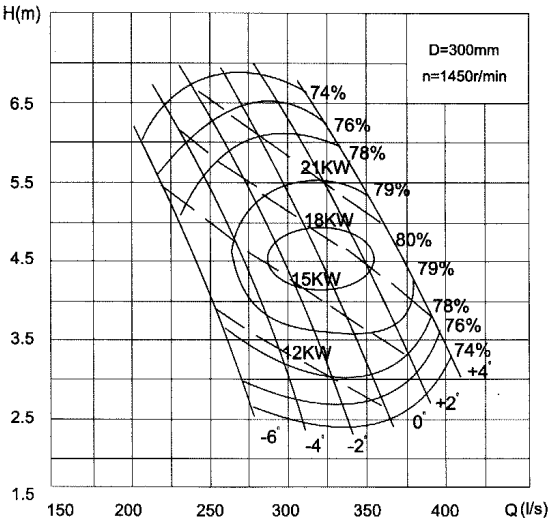

Angle of Vanes	Capacity Q		Head H	Speed n	Power N(kW)		Impeller.Dia (mm)	Eff. η
	m^3/h	l/s	(m)	(r/min)	Shaft Power	Motor Power		(%)
+4°	1170	325	6.4	1450	27	30	300	75.5
	1350	375	4.45		20.2			80.7
	1440	400	3.4		17.4			76.5
+2°	1091	305	6.0		24			76.7
	1260	350	4.43		18.76			81
	1363	380	3.2		15.58			76.5
0°	1033	287	6.0		21.78	22		77.5
	1188	330	4.21		17			80.5
	1285	357	2.98		13.4			77.5
-2°	954	265	5.83		19.5			77.5
	1080	300	4.2		15.4			80.2
	1188	330	2.9		12.1			77.5
-4°	878	244	5.8		18			76.5
	1008	280	4.2		14.1			78.4
	1080	300	2.9		12.3			76.5
-6°	810	225	5.4		15.57			76.5
	900	250	4.03		12.6			79.1
	972	270	3.2		11.07			76

350ZLB-125

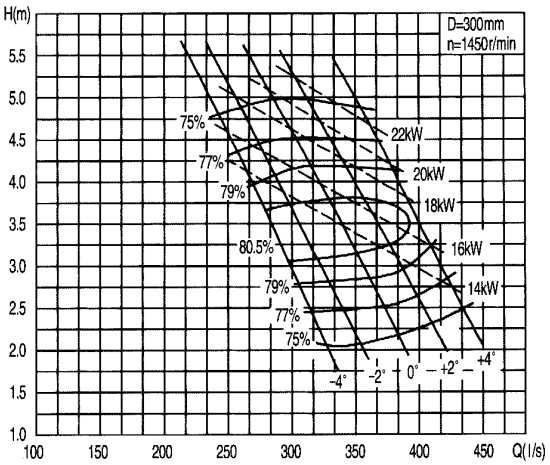

Angle of Vanes	Capacity Q		Head H (m)	Speed n (r/min)	Power N(kW)		Impeller Dia. (mm)	Eff. η (%)
	m^3/h	l/s			Shaft Power	Motor Power		
+4°	1573	437	2.42	1450	13.8	22	300	75.0
	1430	397	3.60		17.5			80.0
	1323	368	4.69		21.1			76.7
+2°	1475	410	2.32		12.4			75.0
	1332	370	3.45		15.5			80.7
	1162	323	4.72		19.5			76.7
0°	1377	383	2.20		11.0	18.5		75.0
	1216	338	3.55		14.6			80.7
	1028	286	4.99		18.6			75.0
-2°	1269	353	2.12		9.8			75.0
	1082	301	3.65		13.3			80.7
	929	258	4.96		16.8			75.0
-4°	1180	328	2.05		8.8			75.0
	1032	287	3.40		11.9			80.7
	867	241	4.69		14.7			75.0

500ZLB-70(DP) – 980 rpm

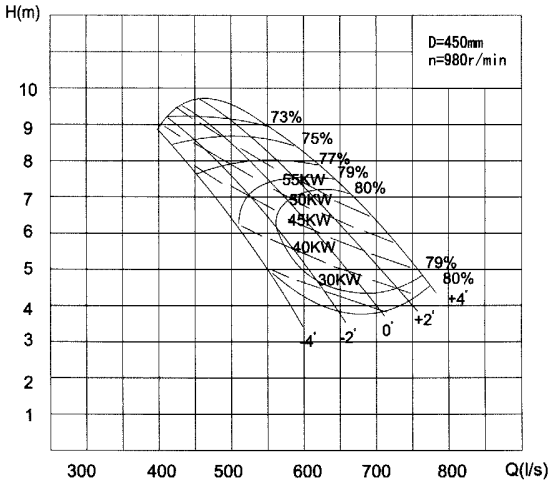

Angle of Vanes	Capacity Q		Head H (m)	Speed n (r/min)	Power N(kW)		Impeller Dia. (mm)	Eff. η (%)
	m^3/h	l/s			Shaft Power	Motor Power		
+4°	2700	750	5.23	980	47.19	55	450	81.5
	2858	794	4.10		43.09			76.0
+2°	2340	650	6.52		50.98			81.5
	2560	711	5.21		44.29			82
	2660	741	4.48		40.43			80.5
0°	2099	583	6.82		48.79			79.9
	2160	600	6.43		46.58			81.2
	2510	696	4.12		36.51			77
-2°	1720	479	8.08		50.93			74.5
	2010	559	6.30		43.16			80
	2250	625	4.68		36.53			78.5
-4°	1370	380	9.36		49.82			70
	1760	489	6.83		41.14			79.6
	2060	571	4.45		31.73			78.5

500ZLB-70(DP) – 730 rpm

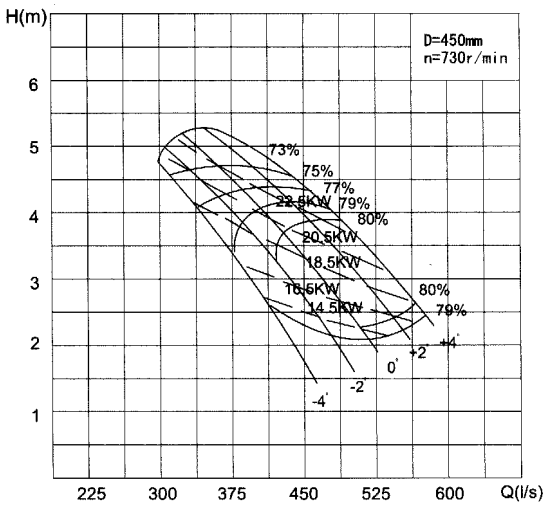

Angle of Vanes	Capacity Q		Head H (m)	Speed n (r/min)	Power N(kW)		Impeller Dia. (mm)	Eff. η (%)
	m^3/h	l/s			Shaft Power	Motor Power		
+4°	1640	454	4.44	730	26.21	30	450	75.4
	1960	545	3.02		17.97			80.8
	2100	582	2.53		17.64			76.0
+2°	1710	475	3.68		21.31			80.4
	1910	530	2.74		17.66			80.6
	1990	552	2.33		16.00			78.8
0°	1480	410	4.08		21.08			77.8
	1610	447	3.48		19.04			80.1
	1870	520	2.06		13.89			75.6
-2°	1175	326	4.84		21.31			72.6
	1500	416	3.38		17.49			78.8
	1675	465	2.76		16.8			71.9
-4°	1020	282	5.12		20.76			68.2
	1310	364	3.70		16.84			78.4
	1530	426	2.40		12.98			77.2

500ZLB-100 – 980 rpm

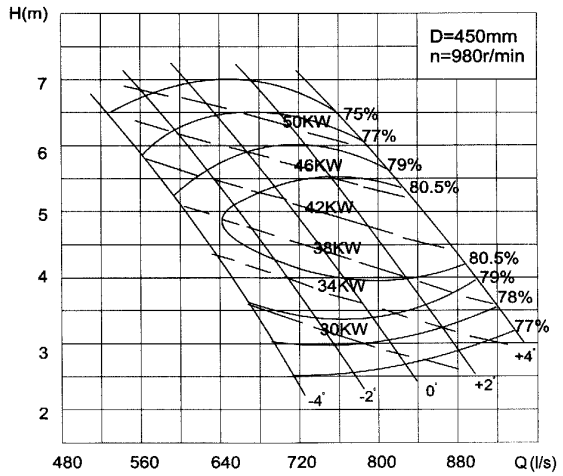

Angle of Vanes	Capacity Q		Head H (m)	Speed n (r/min)	Power N(kW)		Impeller Dia. (mm)	Eff. η (%)
	m^3/h	l/s			Shaft Power	Motor Power		
+4°	2952	820	5.23	980	57.7	55	450	81.3
	3060	850	4.72		48.2			81.6
	3276	910	3.58		41.2			78.0
+2°	2628	730	5.81		51.9			80.15
	2869	797	4.60		43.9			82.00
	3078	855	3.48		37.0			78.95
0°	2304	640	6.42		51.9			77.60
	2646	735	4.65		41.1			81.65
	2862	795	2.43		33.7			79.55
-2°	2070	575	6.57		48.5			76.40
	2448	680	4.61		37.8			81.40
	2646	735	3.40		30.9			79.05
-4°	1926	535	6.32		43.5			76.20
	2268	630	4.44		33.9			80.80
	2430	675	3.41		28.6			79.00

500ZLB-100 – 730 rpm

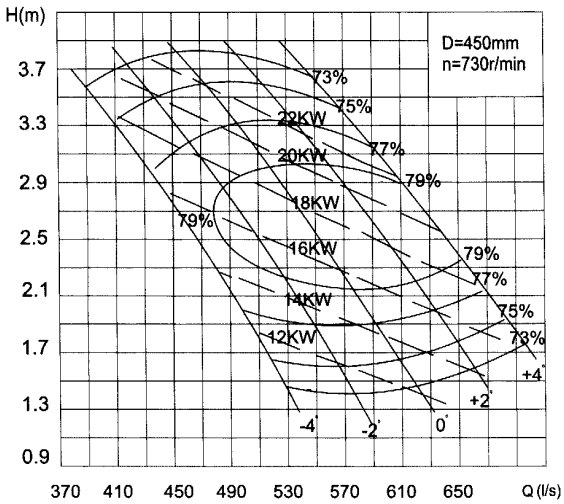

Angle of Vanes	Capacity Q		Head H (m)	Speed n (r/min)	Power N(kW)		Impeller Dia. (mm)	Eff. η (%)
	m^3/h	l/s			Shaft Power	Motor Power		
+4°	2228	619	2.80	730	21.4	22	450	79.45
	2275	632	2.63		20.5			79.60
	2412	670	2.10		17.9			77.10
+2°	1980	550	3.13		21.5			78.60
	2131	592	2.58		17.8			79.90
	2268	630	2.04		16.2			78.0
0°	1764	490	3.40		21.3			76.90
	1980	550	2.55		17.2			79.70
	2124	590	1.95		14.5			77.80
-2°	1548	430	3.63		20.6			74.5
	1822	506	2.56		16.0			79.45
	1962	545	1.94		13.3			77.85
-4°	1440	400	3.48		18.4			74.50
	1692	470	2.45		14.3			78.75
	1800	500	1.94		12.3			77.20

500ZLB-125 – 980 rpm

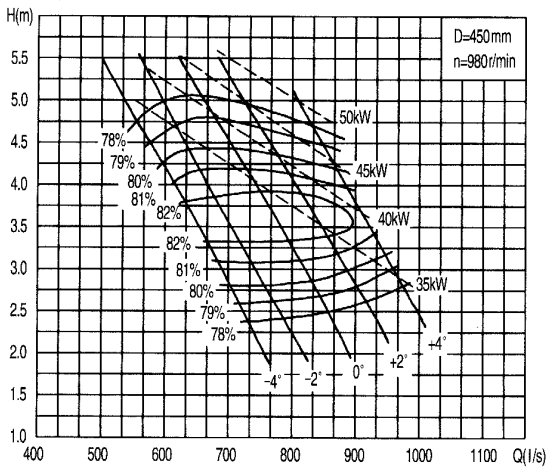

Angle of Vanes	Capacity Q		Head H (m)	Speed n (r/min)	Power N(kW)		Impeller Dia. (mm)	Eff. η (%)
	m^3/h	l/s			Shaft Power	Motor Power		
+4°	3594	999	2.48	980	31.9	55	450	76.0
	3267	908	3.70		40.6			81.0
	3022	839	4.62		48.4			78.5
+2°	3369	936	2.38		28.7			76.0
	3042	845	3.54		35.7			82.2
	2654	737	4.85		44.6			78.5
0°	3145	874	2.26		25.5	45		76.0
	2777	771	3.65		33.6			82.2
	2348	652	5.12		41.9			78.0
-2°	2899	805	2.18		22.6			76.0
	2471	686	3.75		30.7			82.2
	2124	590	5.10		37.7			78.2
-4°	2695	749	2.11		20.4			76.0
	2358	655	3.50		27.4			82.2
	1981	550	4.82		33.3			78.1

500ZLB-125 – 730 rpm

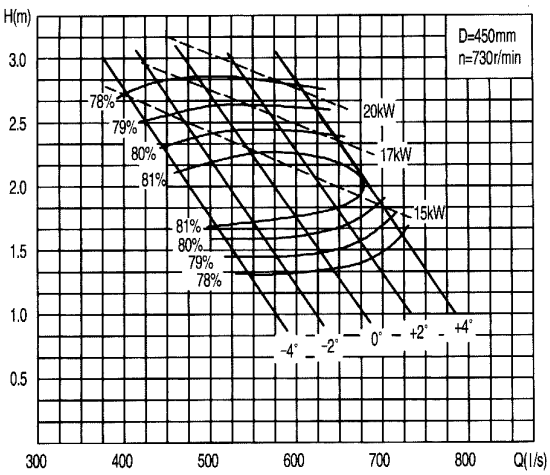

Angle of Vanes	Capacity Q		Head H (m)	Speed n (r/min)	Power N(kW)		Impeller Dia. (mm)	Eff. η (%)
	m^3/h	l/s			Shaft Power	Motor Power		
+4°	2696	749	1.36	730	13.1	22	450	76.0
	2450	681	2.04		17.0			81.0
	2267	630	2.54		19.7			79.5
+2°	2527	702	1.31		11.9			76.0
	2282	634	1.95		14.7			82.2
	1991	553	2.67		18.4			78.5
0°	2359	655	1.24		10.5			76.0
	2083	579	2.0		13.8 17.3			82.2
	1761	489	2.82					78.0
-2°	2174	604	1.20		9.3	18.5		76.0
	1853	515	2.06		12.6 15.6			82.2
	1593	443	2.81					78.2
-4°	2021	561	1.16		8.4			76.0
	1769	491	1.87		11.0			82.0
	1486	413	2.65		13.7			78.1

500ZLB-160 – 980 rpm

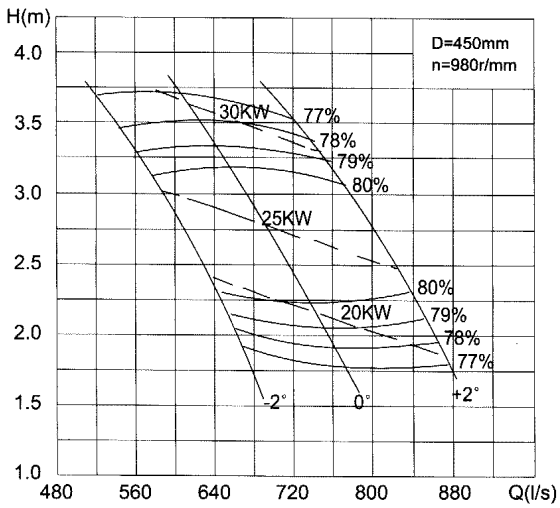

Angle of Vanes	Capacity Q		Head H (m)	Speed n (r/min)	Power N(kW)		Impeller Dia. (mm)	Eff. η (%)
	m^3/h	l/s			Shaft Power	Motor Power		
+2°	3063.6	851	2.14	980	22.2	30	450	80.5
	2898	805	2.75		26.6			81.5
	2682	745	3.35		30.8			79.5
0°	2710.8	753	2.06		18.9			80.5
	2491.2	692 628	2.75		22.9			81.5
	2260.8		3.5		27.1			79.5
-2°	2368.8	658	2.2		17.6			80.5
	2196	610	2.75		20.2 23.1			81.5
	1951.2	542	3.45					79.5

600ZLB-70

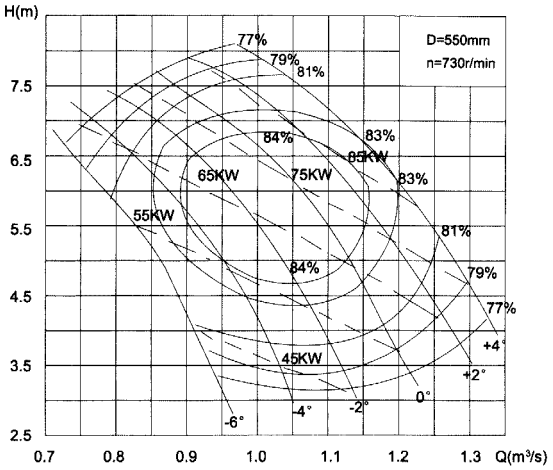

Angle of Vanes	Capacity Q		Head H (m)	Speed n (r/min)	Power N(kW)		Impeller Dia. (mm)	Eff. η (%)
	m^3/h	m^3/s			Shaft Power	Motor Power		
+4°	3620	1.0	7.88	730	98.6	110	550	78.7
	4065	1.13	6.9		92.8 75.4			82.3
	4680	1.30	4.66					78.7
+2°	3385	0.94	7.84		91.8			78.7
	3875	1.08	6.71		84.1			84.1
	4560	1.27	4.09		64.5			78.7
0°	3160	0.88	7.52		82.2			78.7
	3665	0.93	6.39		75.1			84.9
	4335	1.11	3.66		46.7			78.7
-2°	2970	0.83	7.24		74.4	80		78.7
	3355	0.93	6.39		68.7			84.9
	3990	1.11	3.75		50.6			80.5
-4°	2830	0.79	6.85		70.0			78.7
	3354	0.93	5.28		57.1			84.1
	3720	1.03	3.41		43.9			78.7
-6°	2582	0.72	6.66		60.8			77.0
	2950	0.82	5.54		54.0			82.3
	3395	0.94	3.37		40.4			77.0

600ZLB-100

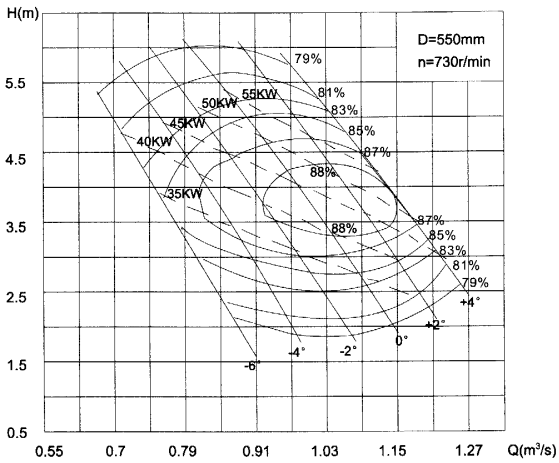

Angle of Vanes	Capacity Q		Head H (m)	Speed n (r/min)	Power N(kW)		Impeller Dia. (mm)	Eff. η (%)
	m^3/h	m^3/s			Shaft Power	Motor Power		
+4°	3620	1.0	5.39	730	65.9	75	550	80.5
	4065	1.13	4.18		53.9			85.8
	4450	1.24	2.96		45.4			80.5
+2°	3260	0.91	5.71		63.0			80.5
	3710	1.03	4.41		51.9			85.8
	4300	1.19	2.47		35.9			80.5
0°	3010	0.84	5.69		57.8			80.5
	3460	0.96	4.34		47.6			85.8 80.5
	4055	1.13	2.27		31.1			
-2°	2760	0.77	5.58		52.0	55		80.5
	3240	0.90	4.12		42.4			85.8
	3765	1.05	2.16		27.5			80.5
-4°	2582	0.72	5.37		46.9			80.5
	2981	0.83	4.34		41.5			84.9
	3465	0.96	2.20		25.8			80.5
-6°	2280	0.63	5.30		41.8			78.7
	2525	0.70	4.56		38.1			82.3
	3150	0.88	2.11		23.0			78.7

600ZLB-125

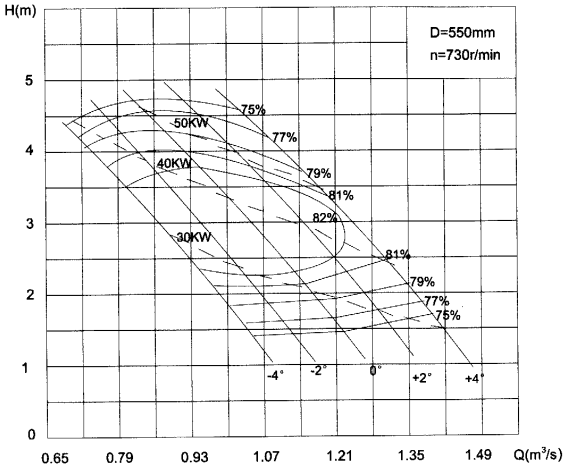

Angle of Vanes	Capacity Q		Head H (m)	Speed n (r/min)	Power N(kW)		Impeller Dia. (mm)	Eff. η (%)
	m^3/h	m^3/s			Shaft Power	Motor Power		
+4°	3815	1.06	4.33	730	59.3	75	550	75.8
	4370	1.21	3.26		47.4			81.9
	5012	1.39	1.81		23.6			75.7
+2°	3360	1.93	4.62		55.6			76.0
	4022	1.12	3.25		42.4			83.9
	4723	1.31	1.62		28.1			74.1
0°	2992	0.83	4.66		49.8			76.2
	3766	1.05	3.02		36.8			84.1
	4367	1.21	1.64		25.7			75.8
-2°	2668	0.74	4.56		43.8	55		75.6
	3355	0.93	3.20		34.8			84.1
	4010	1.11	1.34		19.1			75.8
-4°	2632	0.73	4.11		37.5			78.6
	3200	0.89	2.91		30.3			83.8
	3276	1.04	1.06		21.3			76.3

600ZLB-160

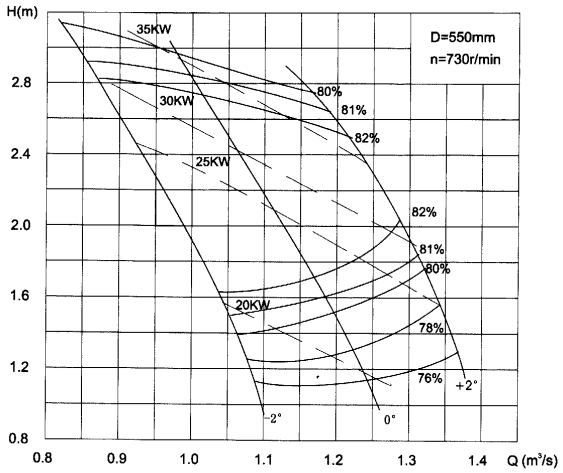

Angle of Vanes	Capacity Q		Head H (m)	Speed n (r/min)	Power N(kW)		Impeller Dia. (mm)	Eff. η (%)
	m^3/h	m^3/s			Shaft Power	Motor Power		
+2°	4155	1.15	2.81	730	39.9	45	550	79.6
	4490	1.25	2.30		34.2			82.3
	4803	1.33	1.62		26.9			78.7
0°	3518	0.98	2.97		35.7			79.6
	4022	1.12	2.13		27.9			83.6
	4335	1.20	1.51		22.4			79.6
-2°	2981	0.83	3.07		31.3			79.6
	3465	0.96	2.12		23.7			84.5
	3852	1.07	1.35		18.0			78.7

700ZLB-70

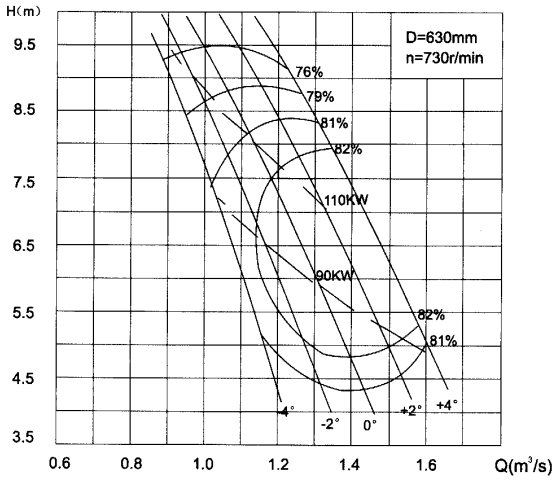

Angle of Vanes	Capacity Q		Head H (m)	Speed n (r/min)	Power N(kW)		Impeller Dia. (mm)	Eff. η (%)
	m^3/h	m^3/s			Shaft Power	Motor Power		
+4°	4860	1.35	7.83	730	125	75	550	75.8
	5274	1.47	6.5		113.3			81.9
	5688	1.58	5.1		97.5			75.7
+2°	4306	1.20	8.5		123			76.0
	4698	1.38	6.48		106.3			83.9
	5497	1.53	4.5		84.1			74.1
0°	3816	1.06	8.87		116.7			76.2
	4500	1.25	6.67		99			84.1
	5184	1.44	4.12		72.3			75.8
-2°	3485	0.97	8.95		108.3	55		75.6
	4230	1.18	6.45		90			84.1
	4631	1.34	4		65.1			75.8
-4°	3197	0.89	9		101			78.6
	3816	1.06	6.63		84.5			83.8
	4334	1.20	4.25		62.9			76.3

700ZLB(Q)-100 – 585 rpm

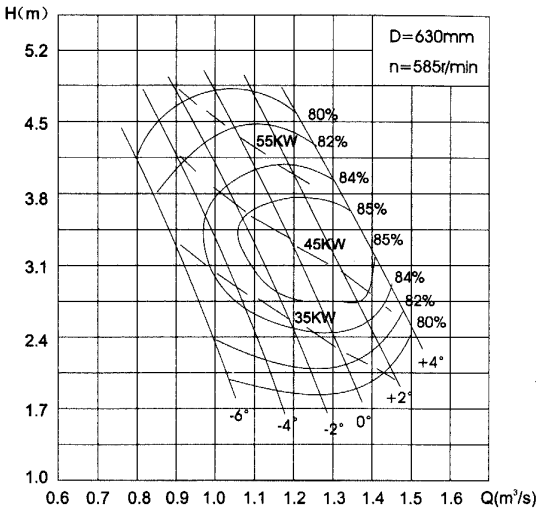

Angle of Vanes	Capacity Q		Head H (m)	Speed n (r/min)	Power N(kW)		Impeller Dia. (mm)	Eff. η (%)
	m^3/h	m^3/s			Shaft Power	Motor Power		
+4°	4320	1.20	4.46	585	68	75	630	80.6
	5040	1.40	3.20		52			84
	5400	1.50	2.4		44			80.6
+2°	3960	1.10	4.72		63			81.2
	4680	1.30	3.22		48			84.0
	5040	1.40	2.4		39			83.4
0°	3600	1.0	4.82		59			80.5
	4428	1.23	3.02		43			84.0
	4824	1.34	2.0		32			82.0
-2°	3348	0.93	4.64		52	55		81.0
	3960	1.10	3.29		42			84.0
	4464	1.24	2.0		30			82.0
-4°	3060	0.85	4.56		47			80.4
	3780	1.05	2.96		36			84.0
	4104	1.14	2.0		27			82.0
-6°	2772	0.77	4.32		41			80
	3420	0.95	2.80		31			84.0
	3600	1.0	2.24		27			82

700ZLB(Q)-100 – 730 rpm

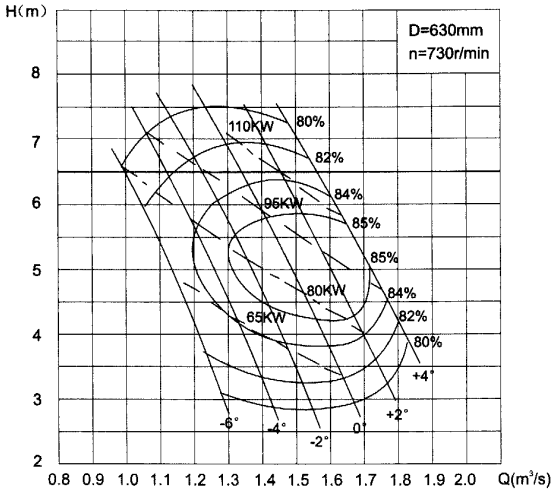

Angle of Vanes	Capacity Q		Head H (m)	Speed n (r/min)	Power N(kW)		Impeller Dia. (mm)	Eff. η (%)
	m^3/h	m^3/s			Shaft Power	Motor Power		
+4°	6840	1.90	3.5	730	82.5	132	630	79
	6120	1.70	5.5		108.5			84.5
	5616	1.56	6.7		125			82
+2°	6480	1.80	3.2		70.6			80
	5580	1.55	5.8		70.6			85.5
	5094	1.42	7.0		119.2			81.5
0°	6030	1.68	3.2		65			81
	5148	1.43	5.8		95.7			85
	4716	1.31	7.0		110.3			81.5
-2°	5616	1.56	3.0		56.6	110		81
	4842	1.35	5.5		85.3			85
	4320	1.20	6.9		110.2			81
-4°	5184	1.44	3.0		52.6			80.5
	4464	1.24	5.4		78.8			84
	4032	1.12	6.6		89.5			81
-6°	4068	1.30	3		48.4			79
	3960	1.10	5.45		71.2			82.5
	3564	0.99	6.6		80.6			78.5

700ZLB-125 – 730 rpm

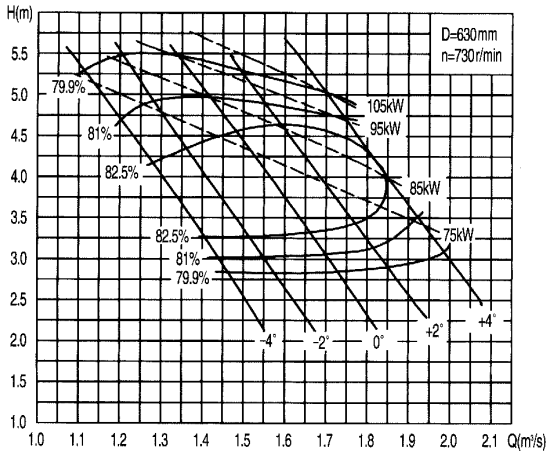

Angle of Vanes	Capacity Q		Head H (m)	Speed n (r/min)	Power N(kW)		Impeller Dia. (mm)	Eff. η (%)
	m^3/h	m^3/s			Shaft Power	Motor Power		
+4°	7335	2.04	2.70	730	69.1	132	630	78.0
	6668	1.85	4.02		88.5			82.5
	6168	1.71	5.02		105.5			79.9
+2°	6878	1.91	2.59		62.2			78.0
	6209	1.72	3.85		78.1			83.4
	5417	1.50	5.27		97.3			79.9
0°	6418	1.78	2.46		55.1	95		78.0
	5668	1.57	3.97		73.1			83.8
	4792	1.33	5.57		90.9			79.9
-2°	5917	1.64	2.37		49			75.6
	5042	1.40	4.08		66.9			84.1
	4334	1.20	5.54		81.8			75.8
-4°	5500	1.53	2.29		44.9	80		78.0
	4813	1.34	3.80		59.7			83.4
	4042	1.12	5.24		72.2			79.9

700ZLB-125 – 585 rpm

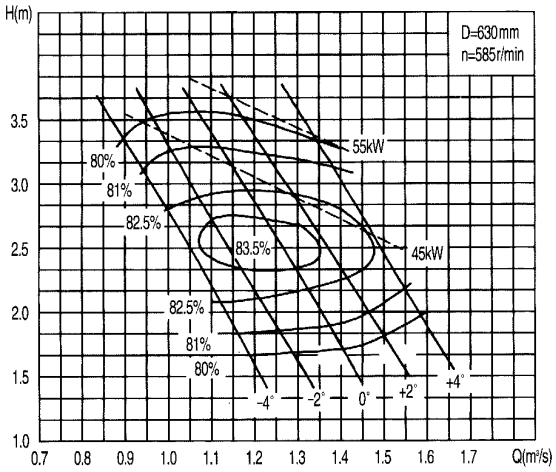

Angle of Vanes	Capacity Q		Head H (m)	Speed n (r/min)	Power N(kW)		Impeller Dia. (mm)	Eff. η (%)
	m^3/h	m^3/s			Shaft Power	Motor Power		
+4°	5868	1.63	1.73	585	35.4	55	630	78.0
	5334	1.48	2.57		45.2			82.5
	4934	1.40	3.03		51.8			80.2
+2°	5501	1.53	1.66		31.9			78.0
	4967	1.38	1.46		39.9			83.4
	4334	1.20	3.37		49.6			79.9
0°	5134	1.43	1.57		28.2			78.0
	4534	1.26	2.54		37.4			83.8
	3834	1.07	3.56		46.7			79.9
-2°	4734	1.32	1.52		25.2			78.0
	4034	1.12	2.61		34.2			83.8
	3467	0.96	3.55		41.8			79.9
-4°	4404	1.22	1.47		22.5	45		78.0
	3850	1.07	2.43		30.6			83.4
	3234	0.90	3.35		37.0			79.9

700ZLB-160

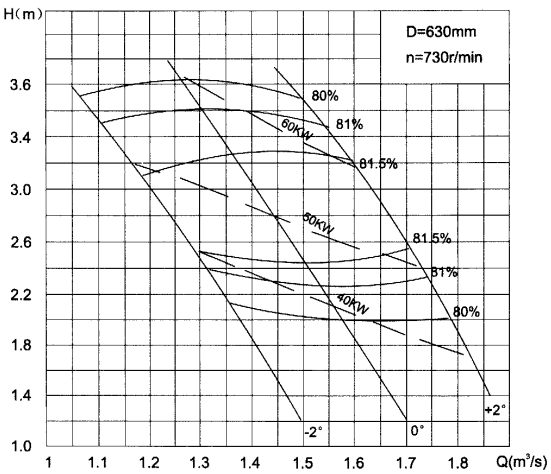

Angle of Vanes	Capacity Q		Head H (m)	Speed n (r/min)	Power N(kW)		Impeller Dia. (mm)	Eff. η (%)
	m^3/h	m^3/s			Shaft Power	Motor Power		
+2°	6030	1.675	2.67	730	53.6	75	630	81.8
	6406	1.780	2.02		44.4			80
0°	4716	1.31	3.6		57			81
	5220	1.45	2.78		47.8			82.6
	5508	1.53	2.25		42.2			81
-2°	4014	1.115	3.5		47.2			81
	4500	1.25	2.8		41.5			82.6
	4800	1.35	2.15		36.5			80.1

800ZLB-70

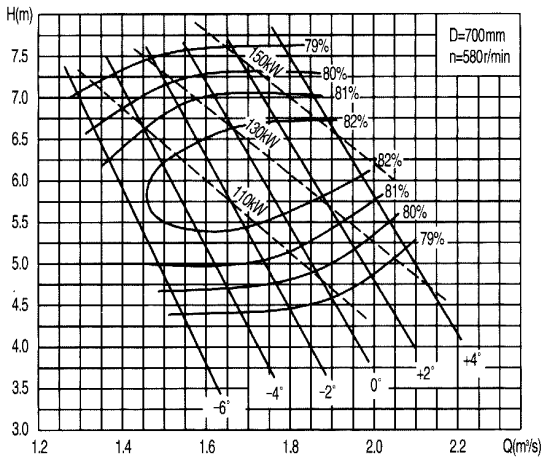

Angle of Vanes	Capacity Q		Head H (m)	Speed n (r/min)	Power N(kW)		Impeller Dia. (mm)	Eff. h (%)
	m^3/h	m^3/s			Shaft Power	Motor Power		
+4°	6480	1.80	7.45	580	165.3	180	700	79.5
	7020	1.95	6.23		144.3			82.5
	7380	2.05	5.40		136.5			79.5
+2°	6228	1.73	7.10		147.7			81.5
	6660	1.85	6.10		133.9			82.6
	7200	2.0	4.79		118.8			79.0
0°	5760	1.60	7.20		140.2	155		80.5
	6156	1.71	6.28		126.9			82.9
	6840	1.90	4.60		108.4			79.0
-2°	5472	1.52	7.0		129.4			80.6
	5904	1.64	5.90		114.2			83.0
	6480	1.80	4.41		99.1			78.5
-4°	5112	1.42	6.90		120.0			80.0
	5904	1.55	5.67		104.5			82.4
	6480	1.70	4.18		88.7			78.5
-6°	4752	1.32	6.75		109.8			79.5
	5148	1.43	5.68		97.3			81.8
	5580	1.55	4.25		82.2			78.5

800ZLB-100 – 580 rpm

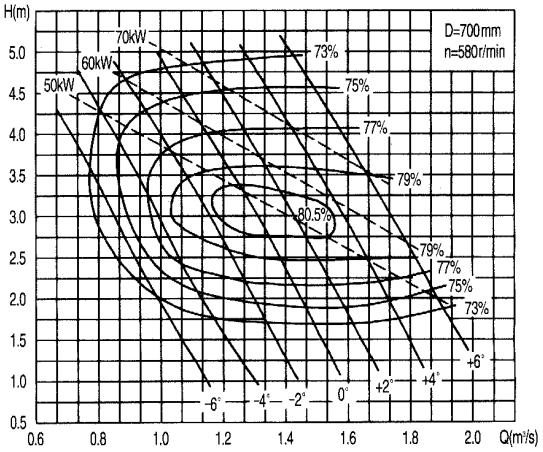

Angle of Vanes	Capacity Q		Head H (m)	Speed n (r/min)	Power N(kW)		Impeller Dia. (mm)	Eff. η (%)
	m^3/h	m^3/s			Shaft Power	Motor Power		
+6°	5163	1.43	4.93	580	94.7	95	700	73.0
	6087	1.69	3.32		69.4			79.2
	6800	1.89	1.99		49.8			74.0
+4°	4987	1.36	4.50		79.4			75.5
	5541	1.54	3.34		64.5			80.2
	6170	1.71	2.13		47.0			76.0
+2°	3946	1.10	5.01		73.9			73.0
	5415	1.50	2.05		45.5			80.7
	5709	1.59	1.93		40.2			74.8
0°	3904	1.08	4.43		62.5	75		75.0
	4575	1.27	3.27		50.3			80.9
	5205	1.45	1.92		37.7			75.5
-2°	3358	0.93	4.43		54.2			74.5
	3988	1.11	3.32		45.1			80.0
	4743	1.32	1.81		31.7			74.0
-4°	2560	0.71	4.94		47.8	55		72.0
	3442	0.96	3.25		40.8			75.0
	4030	1.12	2.08		31.2			73.1
-6°	2728	0.76	3.68		37.6			72.8
	2896	0.80	3.40		36.1			73.8
	3400	0.94	2.35		29.7			73.0

800ZLB-100 – 480 rpm

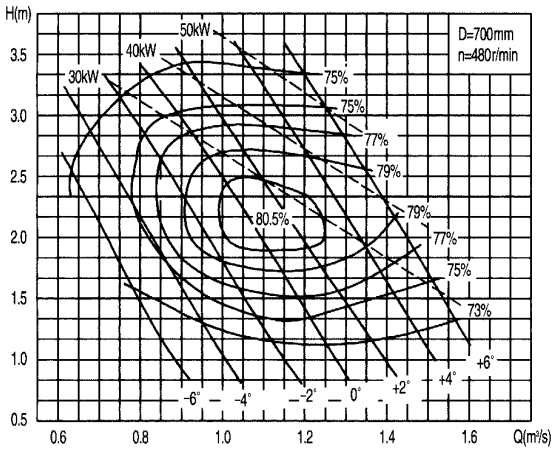

Angle of Vanes	Capacity Q		Head H (m)	Speed n (r/min)	Power N(kW)		Impeller Dia. (mm)	Eff. η (%)
	m^3/h	m^3/s			Shaft Power	Motor Power		
+6°	4428	1.23	3.17	480	51.3	55	700	74.5
	5040	1.40	2.27		39.3			79.2
	4630	1.56	1.36		28.1			74.0
+4°	4055	1.13	3.08		45.2			75.5
	4588	1.27	2.35		36.5			80.2
	5109	1.42	1.46		27.6			76.0
+2°	3267	0.91	3.43		41.9			73.0
	4484	1.25	1.79		27.2			80.7
	4727	1.32	1.35		23.3			74.8
0°	3233	0.89	3.03		35.2	45		75.0
	3788	1.05	2.24		28.5			80.9
	4310	1.20	1.32		20.6			75.5
-2°	2780	0.77	3.03		30.7	37		74.5
	3302	0.92	2.27		25.6			80.0
	3927	1.09	1.24		17.9			74.0
-4°	2520	0.70	2.73		25.5	30		73.5
	2850	0.79	2.23		23.0			75.0
	3337	0.93	1.42		17.7			73.1
-6°	2259	0.63	2.52		21.4			72.8
	2398	0.67	2.33		20.7			73.8
	2815	0.78	1.61		16.9			73.0

800ZLB-125 – 580 rpm

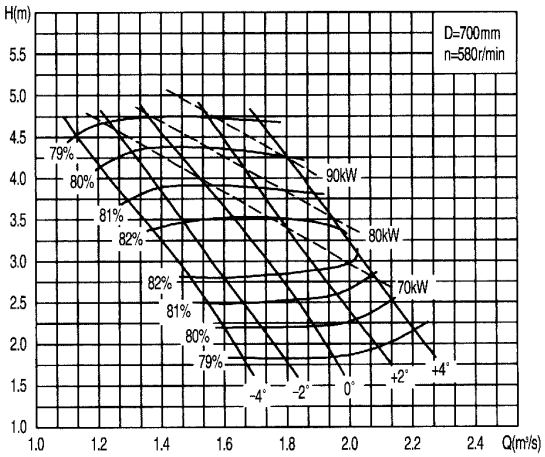

Angle of Vanes	Capacity Q		Head H (m)	Speed n (r/min)	Power N(kW)		Impeller Dia. (mm)	Eff. η (%)
	m^3/h	m^3/s			Shaft Power	Motor Power		
+4°	7995	2.22	2.10	580	57.9	95	700	79.0
	7268	2.02	3.14		75.3			82.5
	6732	1.87	3.92		89.2			80.5
+2°	7485	2.08	2.02		52.1			79.0
	6768	1.88	3.0		66.3			83.4
	5904	1.64	4.11		82.1			80.5
0°	6996	1.94	1.92		46.2			79.0
	6178	1.72	3.10		62.3			83.8
	5223	1.45	4.34		77.1			80.0
-2°	6450	1.79	1.85		41.1	80		79.0
	5496	1.53	3.18		56.9			83.8
	4724	1.31	4.32		69.3			80.0
-4°	5995	1.67	1.97		37.1			79.0
	5246	1.46	2.96		50.8			83.4
	4406	1.22	4.09		61.1			80.0

800ZLB-100 – 480 rpm

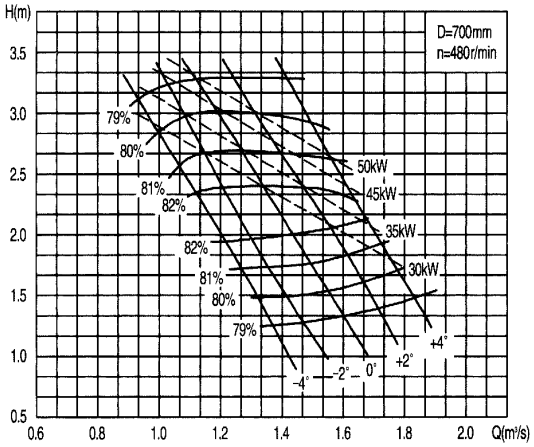

Angle of Vanes	Capacity Q		Head H (m)	Speed n (r/min)	Power N(kW)		Impeller Dia. (mm)	Eff. h (%)
	m^3/h	m^3/s			Shaft Power	Motor Power		
+4°	6620	1.84	1.44	480	32.9	55	700	79.0
	6018	1.67	2.15		42.7			82.5
	5567	1.55	2.69		50.8			80.5
+2°	6206	1.72	1.38		29.4			79.0
	5604	1.56	2.06		37.8			83.4
	4889	1.36	2.82		46.7			80.5
0°	5793	1.61	1.32		26.4			79.0
	5115	1.42	2.12		35.2			83.8
	4325	1.20	2.97		43.7			80.0
-2°	5341	1.48	1.27		23.3	45		79.0
	5115	1.26	2.18		32.1			83.8
	3911	1.09	2.96		39.5			80.0
-4°	4964	1.38	1.23		21.1			79.0
	4344	1.21	2.03		28.9			83.4
	3648	1.01	2.80		34.6			80.0

900ZLB-70H

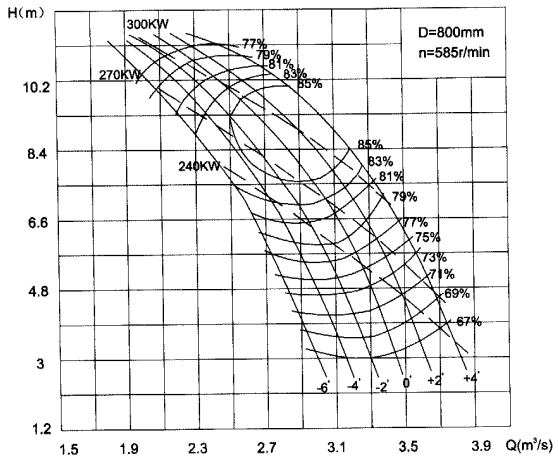

Angle of Vanes	Capacity Q		Head H (m)	Speed n (r/min)	Power N(kW)		Impeller Dia. (mm)	Eff. η (%)
	m^3/h	m^3/s			Shaft Power	Motor Power		
+4°	11340	3.15	8.2	585	45.2	355	800	84
	10260	3.5	6.0		36.5			75
	13320	3.7	4.0		27.6			68
+2°	8352	2.32	10.8		41.9			77
	10800	3.0	8.2		27.2			85
	11880	3.3	6.0		23.3			77
0°	7920	2.2	10.8		35.2			76
	10260	2.85	8.2		28.5			85
	11232	3.12	6.1		20.6			79
-2°	7560	2.10	10.7		30.7	315		76
	9720	2.70	8.2		25.6			85
	10800	3.0	6.0		17.9			79
-4°	7272	2.02	10.65		25.5			76
	9036	2.51	8.2		23.0			85
	10088	2.83	6.1		17.7			79
-6°	6840	1.90	10.7		21.4	280		76
	8280	2.30	8.7		20.7			81
	9000	2.50	6.8		16.9			81

900ZLB(Q)-100 – 585 rpm

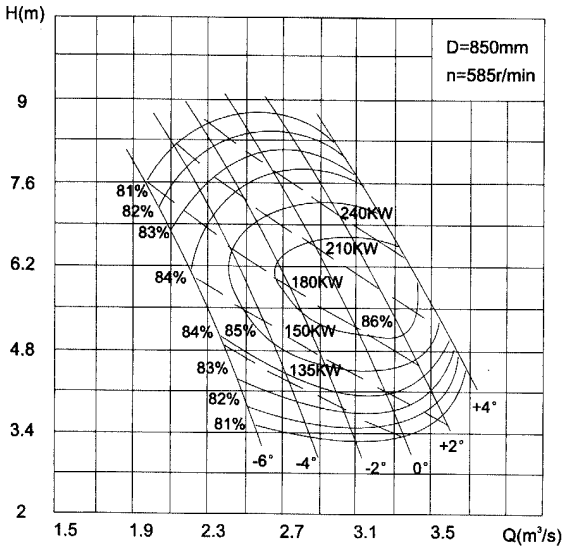

Angle of Vanes	Capacity Q		Head H (m)	Speed n (r/min)	Power N(kW)		Impeller Dia. (mm)	Eff. η (%)
	m^3/h	m^3/s			Shaft Power	Motor Power		
+4°	13428	3.73	3.8	585	172.5	315	850	80.5
	12456	3.46	5.5		241.3			87.0
	10296	2.86	8.65		301			80.5
+2°	12780	3.55	3.4		146.9			80.5
	11808	3.28	5.1		188.4			87.0
	9252	2.57	9.0		280.9			80.5
0°	12060	3.35	3.1		126.4	280		80.5
	11016	3.06	5.0		172.3			87.0
	8460	2.35	9.0		257.4			80.5
-2°	10260	3.08	2.95		110.6			80.5
	9936	2.76	5.35		166.3			87.0
	8496	2.36	8.90		255.7			80.5
-4°	10260	2.86	3.05		105.8	210		80.5
	9360	2.6	5.0		147.9			86.1
	7128	1.98	8.6		207.7			80.5

900ZLB(Q)-100 – 485 rpm

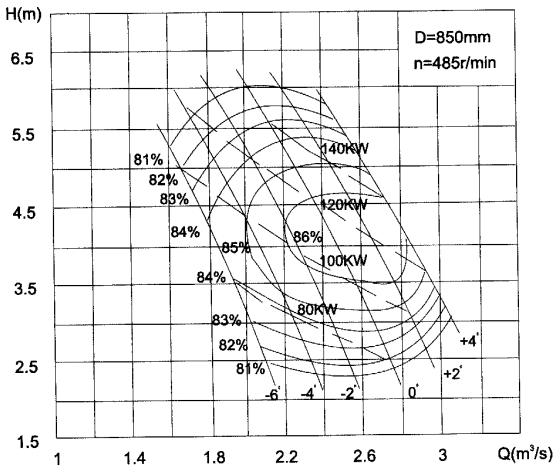

Angle of Vanes	Capacity Q		Head H (m)	Speed n (r/min)	Power N(kW)		Impeller Dia. (mm)	Eff. η (%)
	m^3/h	m^3/s			Shaft Power	Motor Power		
+4°	11088	3.08	2.60	485	97.5	180	850	80.5
	10152	2.82	3.92		124.5			87.0
	8892	2.47	5.45		160.8			82.0
+2°	10584	2.94	2.4		85.9			80.5
	9432	2.62	4.0		118.05			87.0
	7740	2.15	6.1		159.7			80.5
0°	9936	2.76	2.18		72.3	155		80.5
	8712	2.42	4.0		109.0			87.0
	7056	1.96	6.1		146.7			80.5
-2°	9252	2.57	2.03		63.5			80.5
	8028	2.23	4.0		100.4			87.0
	6120	2.36	6.50		125.2			80.5
-4°	8496	2.36	2.05		58.9			80.5
	7596	2.11	3.7		88.9			86.1
	5976	1.66	5.9		119.2			80.5

900ZLB-125

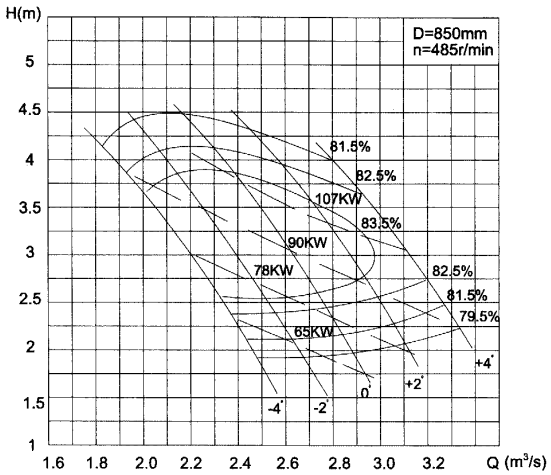

Angle of Vanes	Capacity Q		Head H (m)	Speed n (r/min)	Power N(kW)		Impeller Dia. (mm)	Eff. η (%)
	m^3/h	m^3/s			Shaft Power	Motor Power		
+4°	12024	3.34	2.2	485	90.3	155	850	79.7
	10944	3.04	3.25		115.7			83.7
	10080	2.8	4.0		135			81.3
+2°	11232	3.12	2.06		79			79.7
	10080	2.8	3.2		103.9			84.5
	8820	2.45	4.35		128.5			81.3
0°	10440	2.9	1.96		69.9	130		79.7
	9180	2.55	3.25		95.7			84.9
	7776	2.16	4.48		116.6			81.3
-2°	9648	2.68	1.9		62.6			79.7
	8316	2.31	3.25		86.7			84.9
	7092	1.97	4.4		104.5			81.3
-4°	8928	2.48	1.86		56.7			79.7
	7920	2.2	3.0		76.5			84.5
	6948	1.93	4.2		97.7			81.3

900ZLB-160

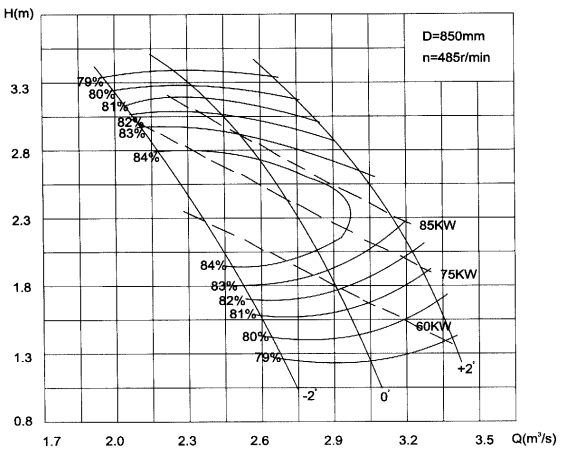

Angle of Vanes	Capacity Q		Head H (m)	Speed n (r/min)	Power N(kW)		Impeller Dia. (mm)	Eff. η (%)
	m^3/h	m^3/s			Shaft Power	Motor Power		
+2°	11808	3.28	1.6	485	64.5	130	850	80
	11016	3.06	2.4		86.3			83.5
	10188	2.83	3.0		102.5			81.2
0°	10800	3.0	1.4		51.6	100		80
	9720	2.7	2.4		75.2			84.5
	8928	2.48	3.0		88.5			82.5
-2°	9720	2.7	1.2		40.5	80		78.5
	8280	2.3	2.4		64			84.5
	7020	1.95	3.0		72			79.5

1000ZLB-70

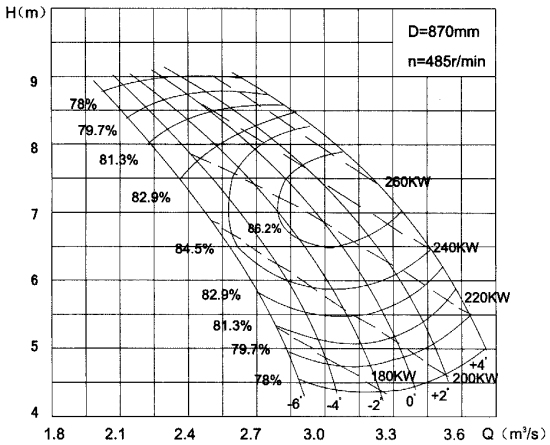

Angle of Vanes	Capacity Q		Head H (m)	Speed n (r/min)	Power N(kW)		Impeller Dia. (mm)	Eff. η (%)
	m^3/h	m^3/s			Shaft Power	Motor Power		
+4°	11304	3.64	5.3	485	242.4	515	870	78
	11520	3.2	7.5		272.8			86.2
	9540	2.65	8.95		295.3			78
+2°	12700	3.53	4.78		212.0			78
	11232	3.12	7.0		246.6			86.8
	8460	2.35	8.97		264.8			78
0°	12240	3.4	4.42		188.8	280		78
	10656	2.96	7.0		233.9			86.8
	8100	2.25	8.98		251.3			78
-2°	11772	3.27	4.31		177.2			78
	10188	2.83	6.8		218.8			86.2
	7812	2.17	8.87		277.0			78
-4°	11088	3.08	4.4		170.3			78
	9864	2.74	6.5		205.1			85.1
	7488	2.08	8.87		231.8			78
-6°	10440	2.9	4.55		165.8			78
	9180	2.55	6.6		197.5			83.5
	7200	2.0	8.78		220.6			78

1000ZLB-100

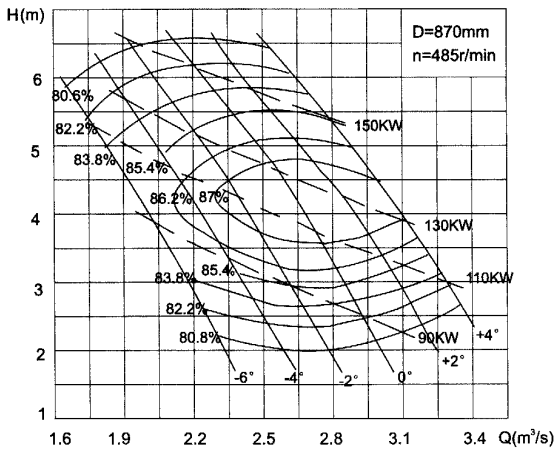

Angle of Vanes	Capacity Q		Head H (m)	Speed n (r/min)	Power N(kW)		Impeller Dia. (mm)	Eff. η (%)
	m^3/h	m^3/s			Shaft Power	Motor Power		
+4°	12060	3.35	2.8	485	114.0	210	870	80.6
	10908	3.03	4.35		148.5			87
	9180	2.55	6.4		198.4			86.6
+2°	11484	3.19	2.5		96.9			80.6
	10080	2.8	4.4		138.8			87
	8280	2.3	6.55		183.2			86.6
0°	10800	3.0	2.27		82.8			80.6
	9504	2.64	4.2		124.9			87
	7998	2.13	6.6		170.9			86.6
-2°	10008	2.78	2.16		73.0	180		80.6
	8712	2.42	4.2		114.5			87
	6912	2.13	6.5		151.7			86.6
-4°	9612	2.56	2.2		68.4	155		80.6
	8100	2.25	4.0		102.3			86.2
	6444	1.79	6.25		136.0			86.6
-6°	8280	2.30	2.32		64.9	130		80.6
	7344	2.04	4.0		95.2			84
	5976	1.66	5.85		118.5			86.6

1000ZLB-125

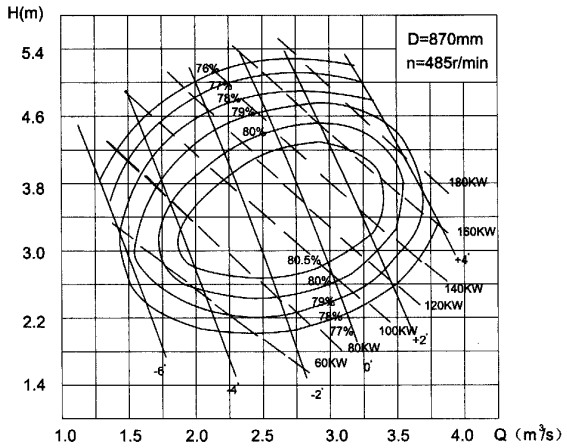

Angle of Vanes	Capacity Q		Head H (m)	Speed n (r/min)	Power N(kW)		Impeller Dia. (mm)	Eff. h (%)
	m^3/h	m^3/s			Shaft Power	Motor Power		
+4°	9612	2.67	5.27	485	185.2	210	870	76
	13248	3.68	3.80		177			79
	13680	3.8	3.40		168			77
+2°	10224	2.84	4.8		170.7	180		78.3
	11340	3.15	3.83		145.5			81.3
	12760	3.52	2.0		113.2			76.2
0°	8460	2.35	5.2		156.4			76.6
	10404	2.89	3.38		117.6			81.46
	11628	3.23	2.0		83.6			75.8
-2°	7128	1.98	5.06		130.1	155		75.5
	8676	2.41	3.35		97.8			80.9
	10008	2.78	1.69		60.2			76.5
-4°	5726	1.59	4.53		93.3	130		75.7
	7128	1.98	3.0		72.3			80.55
	8028	2.23	1.9		54.1			76.5
-6°	4968	1.38	3.70		67.5	75		76
	5508	1.53	3.0		59			78
	5796	1.61	2.6		54			78

1200ZLB(Q)-70

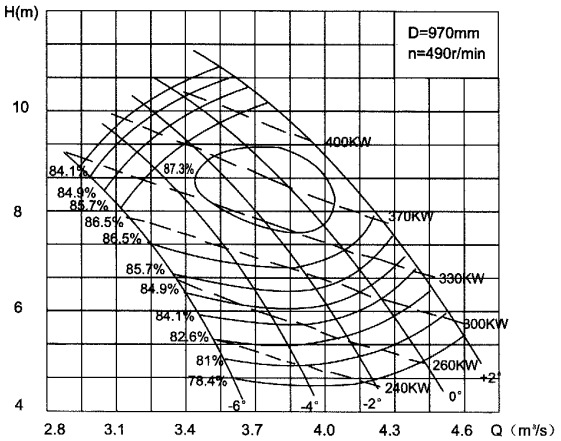

Angle of Vanes	Capacity Q		Head H (m)	Speed n (r/min)	Power N(kW)		Impeller Dia. (mm)	Eff. η (%)
	m^3/h	m^3/s			Shaft Power	Motor Power		
+4°	14544	4.04	9.0	490	409.6	440	970	87.0
	12708	3.53	10.95		450.4			84.1
+2°	16200	4.5	4.86		269.9			79.4
	13968	3.88	8.5		370.2			87.3
	12068	3.35	10.5		405.9			84.1
0°	15408	4.28	4.66		246.2			79.4
	13104	3.64	8.5		347.3			87.3
	11592	3.22	10.1		378.9			84.1
-2°	14328	3.98	4.6		225.9	400		79.4
	12456	3.46	8.0		311.8			87.3
	11088	3.08	9.6		344.5			84.1
-4°	13176	3.66	4.7		212.3			79.4
	11592	3.22	7.7		280.9			87.3
	105656	2.96	9.04		311.8			84.1

1200ZLB(Q)-100

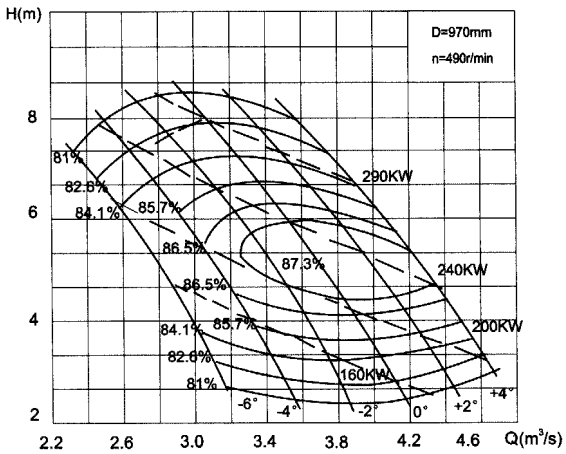

Angle of Vanes	Capacity Q		Head H (m)	Speed n (r/min)	Power N(kW)		Impeller Dia. (mm)	Eff. η (%)
	m^3/h	m^3/s			Shaft Power	Motor Power		
+4°	16884	4.69	3.55	490	201.4	380	970	81
	15912	4.24	5.5		261.8			87.3
	12816	3.56	8.05		346.7			81
+2°	16056	4.46	3.2		172.7	330		81
	14220	3.95	5.5		243.9			87.3
	11664	3.24	8.3		325.4			81
0°	15120	4.2	2.88		146.3			81
	13176	3.66	5.5		225.9			87.3
	10656	2.96	8.4		300.8			81
-2°	13968	3.88	2.75		129.1			81
	12312	3.42	5.35		207.3			86.5
	9648	2.68	8.3		269.1			81
-4°	12888	3.58	2.8		121.3	260		81
	11448	3.18	5.0		180.1			86.5
	9000	2.5	8.05		243.5			81
-6°	11592	3.22	2.97		115.7			81
	10080	2.8	5.3		172.9			84.1
	8388	2.33	7.45		210.0			81

1200ZLB(Q)-125

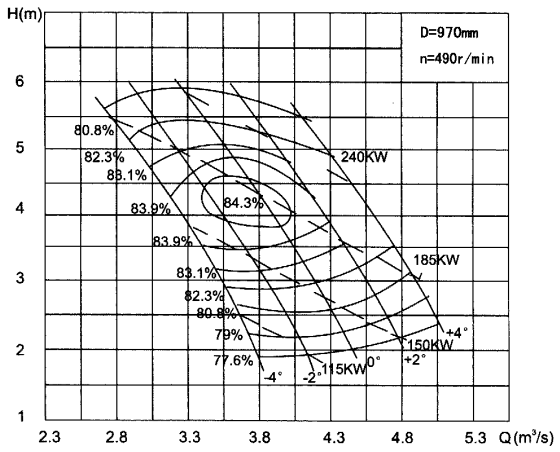

Angle of Vanes	Capacity Q		Head H (m)	Speed n (r/min)	Power N(kW)		Impeller Dia. (mm)	Eff. η (%)
	m^3/h	m^3/s			Shaft Power	Motor Power		
+4°	18360	5.1	2.63	490	169.4	280	970	77.6
	16560	4.6	4.12		225.7			82.3
	15120	4.2	5.44		277.1			80.8
+2°	17100	4.75	2.55		152.9			77.6
	15120	4.2	4.22		207.0			83.9
	13320	3.7	5.75		258.0			80.8
0°	15948	4.43	2.4		134.3	260		77.6
	13320	3.7	4.45		191.4			84.3
	11664	3.24	5.95		233.8			80.8
-2°	14760	4.10	2.25		116.5			77.6
	12600	3.5	4.25		172.9			84.3
	10656	2.96	5.9		203.0			80.8
-4°	13680	3.8	2.15		103.2			77.6
	11880	3.3	4.0		154.2			83.9
	9936	2.76	5.6		187.5			80.8

1400ZLB(Q)5-5

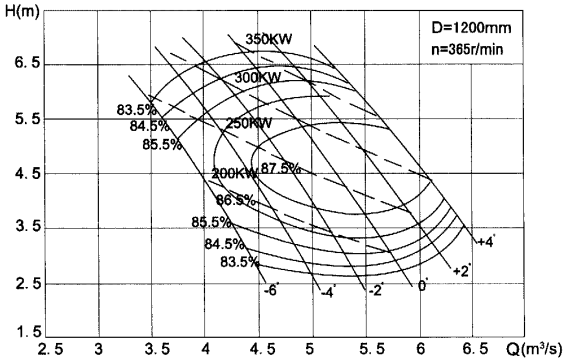

Angle of Vanes	Capacity Q	Head H	Speed n	Power N(kW)		Eff. η	Impeller Dia. (mm)	Note
	m^3/s	(m)	(r/min)	Shaft Power	Motor Power	(%)		
+4°	5.00	6.85	365	411	440	81.8	1200	
	5.86	4.98		326		87.8		
	6.45	3.22		253		81.8		
+2°	4.54	7.07		385		81.8		
	5.85	3.95		258		87.8		
	6.30	2.70		204		81.8		
0°	4.20	7.10		358	380	81.8		
	5.41	3.96		239		87.8		
	5.93	2.43		173		81.8		
-2°	3.79	7.00		318		81.8		
	4.90	4.20		230		87.8		
	5.49	2.33		153		81.8		
-4°	3.53	6.82		289	310	81.8		
	4.60	3.90		202		87.8		
	5.06	2.38		144		81.8		
-6°	3.29	6.30		249		81.8		
	4.30	3.27		163		84.8		
	4.54	2.50		136		81.8		

1400ZLB(Q)5.5-3.5

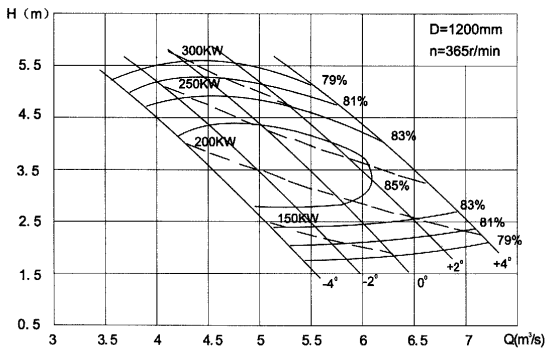

Angle of Vanes	Capacity Q	Head H	Speed n	Power N(kW)		Eff. η	Impeller Dia. (mm)	Note
	m^3/s	(m)	(r/min)	Shaft Power	Motor Power	(%)		
-4°	3.60	5.18	365	230	310	79.6	1200	
	4.60	3.46		197		86.1		
	5.37	1.90		127		79.7		
-2°	3.85	5.42		259		79.1		
	4.84	3.80		209		86.4		
	5.78	1.94		138		80.0		
0°	4.31	5.55		294		79.7		
	5.43	3.60		222		86.4		
	6.30	1.95		152		79.3		
+2°	4.84	5.50		329	380	79.4		
	5.80	3.87		255		86.2		
	6.80	1.94		166		77.8		
+4°	5.15	5.70		370		77.6		
	6.30	3.88		284		84.5		
	7.00	2.50		210		81.6		

1400ZLB(Q)5.5-7.5

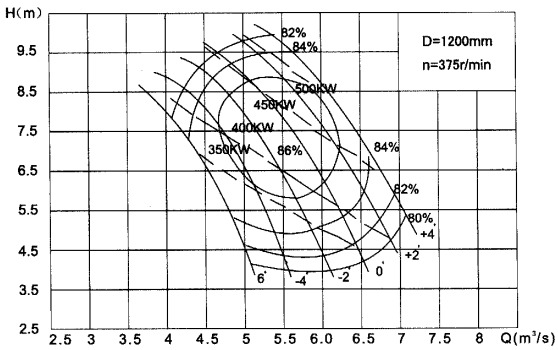

Angle of Vanes	Capacity Q	Head H	Speed n	Power N(kW)		Eff. η	Impeller Dia. (mm)	Note
	m^3/s	(m)	(r/min)	Shaft Power	Motor Power	(%)		
+4°	5.13	10.17	375	637	630	80.3	1200	
	6.42	7.60		564		84.8		
	7.05	5.40		465		80.3		
+2°	4.85	9.93		588		80.3		
	6.20	7.00		493		86.4		
	6.85	4.77		399		80.3		
0°	4.55	9.60		534		80.3		
	5.86	6.74		445		87.1		
	6.49	4.27		339		80.3		
-2°	4.29	9.23		484	550	80.3		
	5.43	6.53		399		87.1		
	5.90	4.70		339		80.3		
-4°	4.00	8.80		430		80.3		
	5.00	6.40		363		86.4		
	5.50	4.30		289		80.3		
-6°	3.80	8.40		390		80.3		
	4.65	6.00		323		84.8		
	5.00	4.50		275		80.3		

1600ZLB(Q)9.5-6

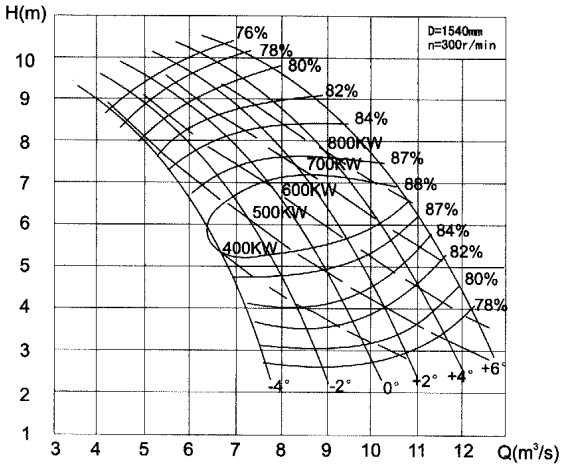

Angle of Vanes	Capacity Q	Head H	Speed n	Power N(kW)		Eff. η	Impeller Dia. (mm)	Note
	m^3/s	(m)	(r/min)	Shaft Power	Motor Power	(%)		
+6°	10.88	6.50	300	790	800	87.8	1200	TL800-20/2150
	12.3	4.00		619		78.0		
+4°	9.30	7.50		782		87.5		
	10.2	6.00		682		88.0		
	11.6	3.50		511		78.0		
+2°	6.25	9.50		742		78.5		
	9.35	6.00		623		88.3		
	10.85	3.00		410		78.0		
0°	5.10	9.50		625		76.0		
	8.45	6.00		563		88.4		
	10.0	3.00		373		79.0		
-2°	4.85	9.00		556		77.0		
	7.40	6.00		493		88.4		
	8.80	3.00		326		79.5		
-4°	3.90	8.90		454		75.0		
	6.35	6.00		425		88.0		
	7.60	3.00		283		79.0		

Installation Drawing & Dimensions and Weights

350ZLB-70
350ZLB100
350ZLB-125

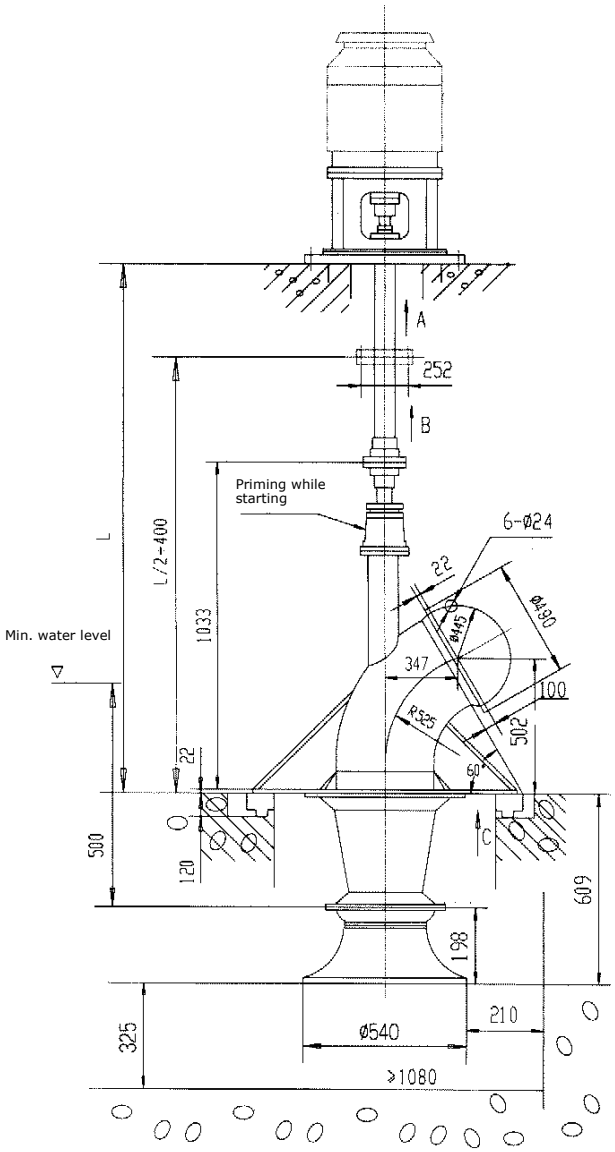

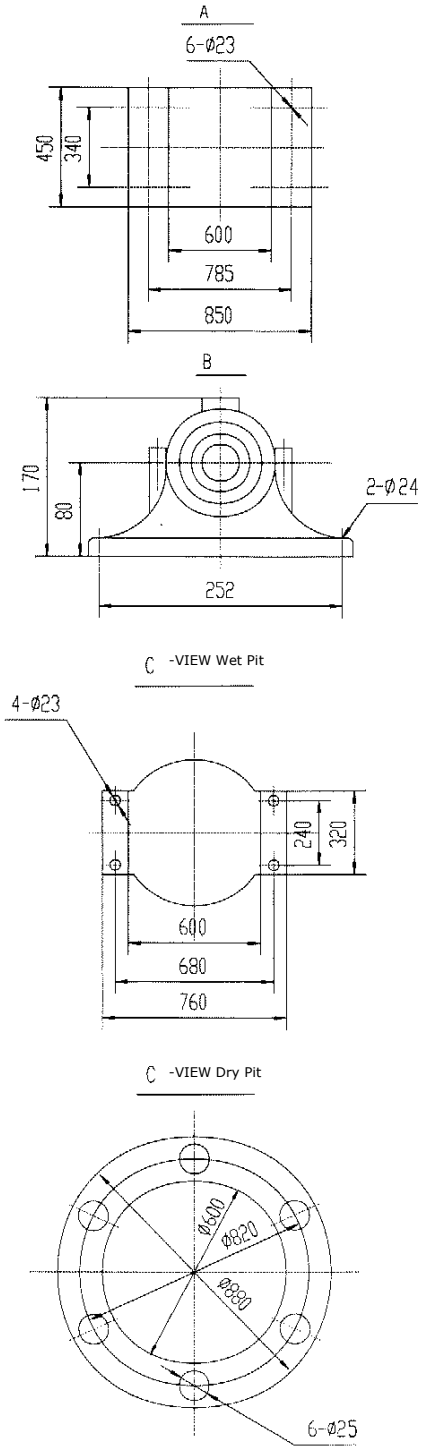

Note:
1. Pump weight 300 kg, Rotor weight 80 kg
2. Weight of Driving system 270 kg
3. Max. Axial Thrust 600 kg
4. L=1200-5500, Intermediate driving required when L>=3500 mm

350ZLB-70DP

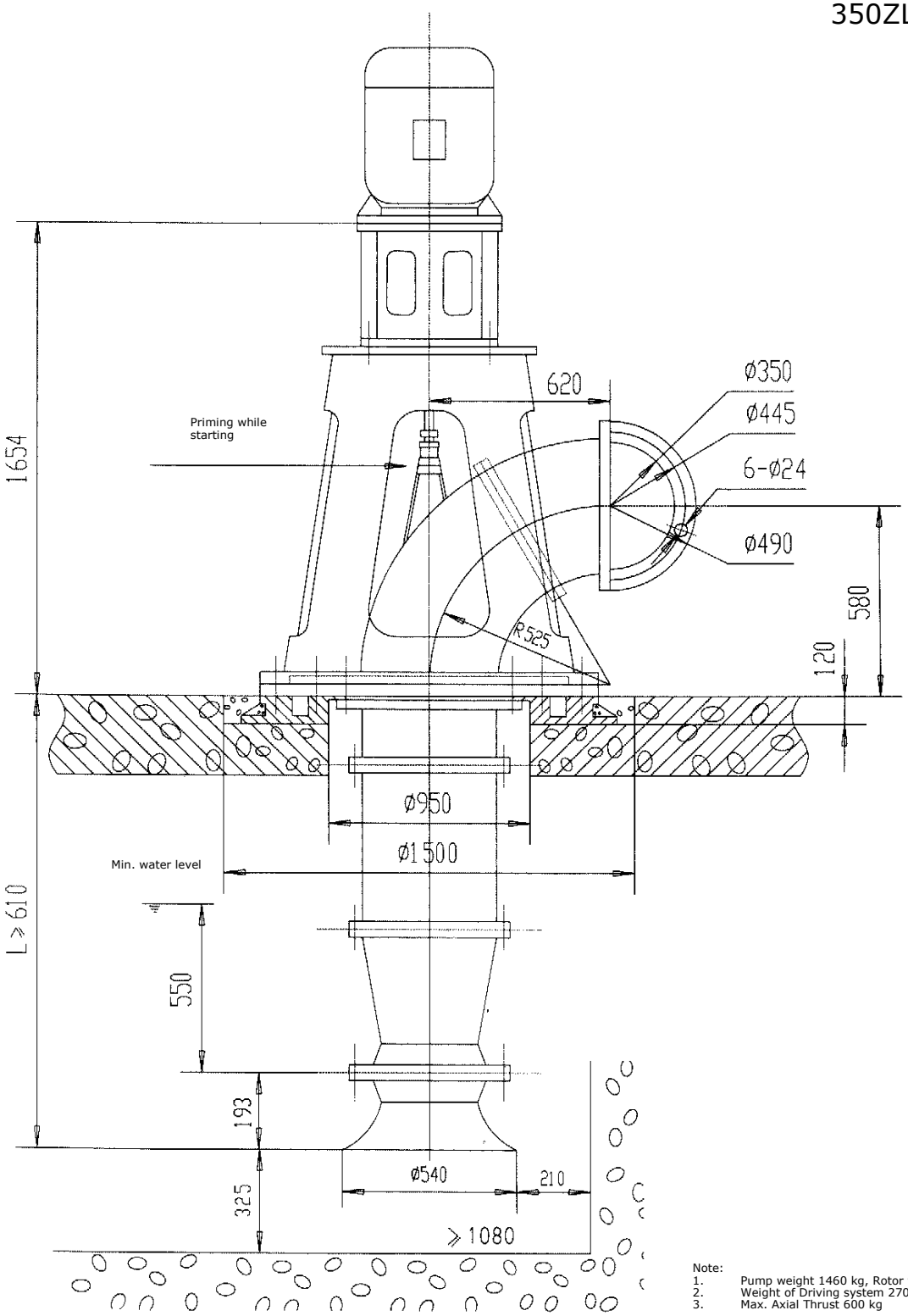

Note:
1. Pump weight 1460 kg, Rotor weight 80 kg
2. Weight of Driving system 270 kg
3. Max. Axial Thrust 600 kg

500ZLB-160

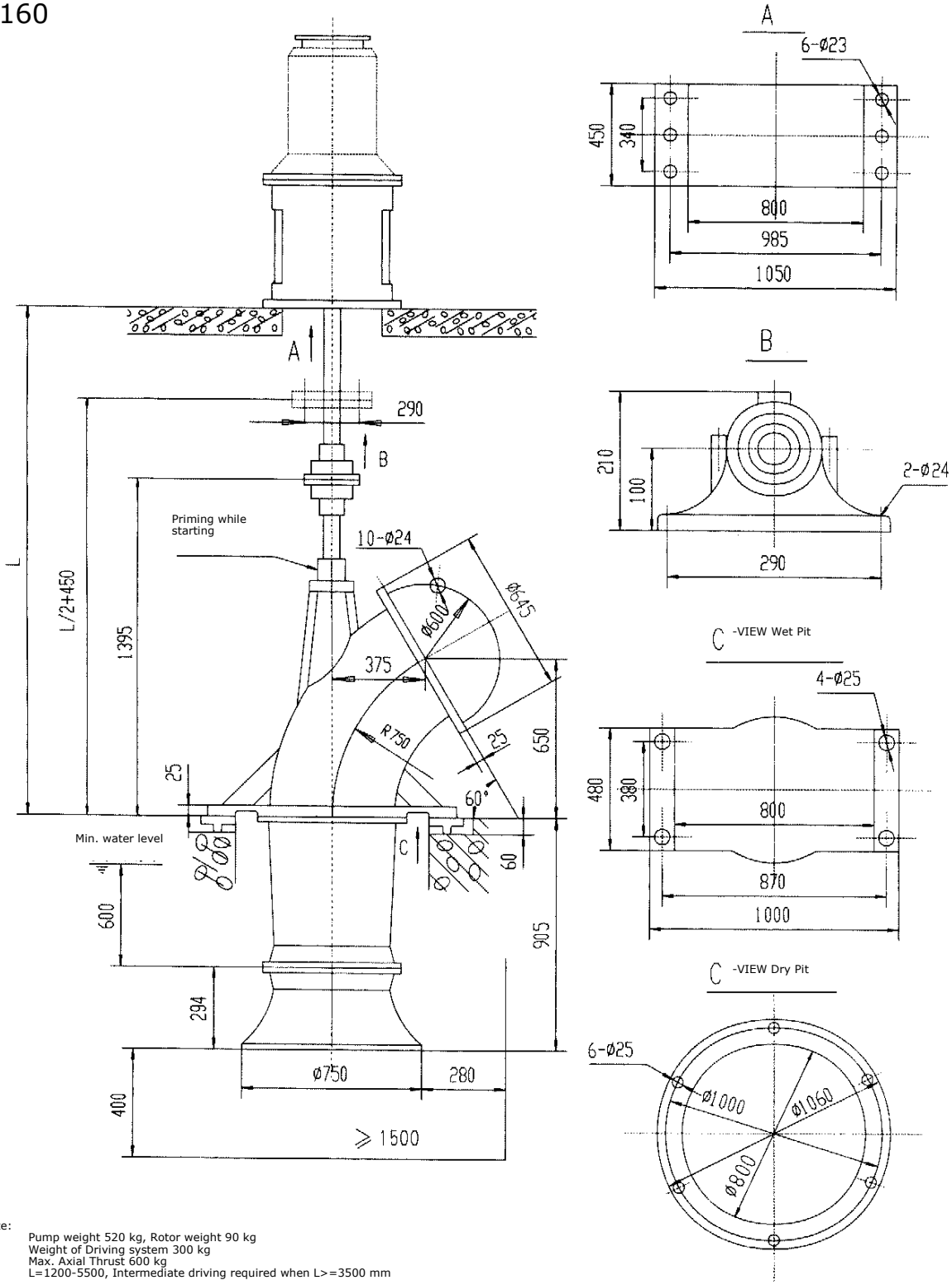

Note:
1. Pump weight 520 kg, Rotor weight 90 kg
2. Weight of Driving system 300 kg
3. Max. Axial Thrust 600 kg
4. L=1200-5500, Intermediate driving required when L>=3500 mm

500ZLB-70
500ZLB-100
500ZLB-125

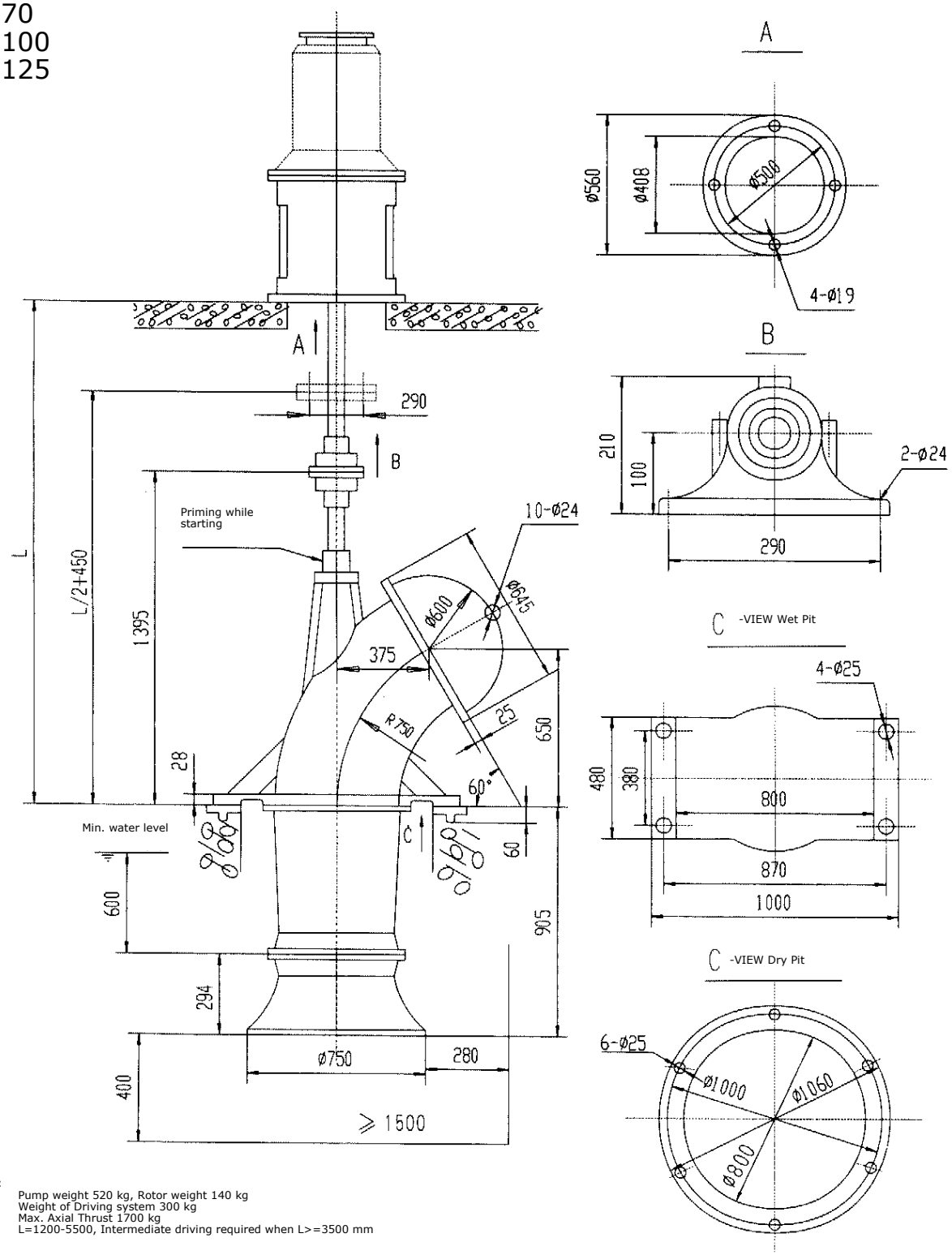

Note:
1. Pump weight 520 kg, Rotor weight 140 kg
2. Weight of Driving system 300 kg
3. Max. Axial Thrust 1700 kg
4. L=1200-5500, Intermediate driving required when L>=3500 mm

500ZLB-70DP

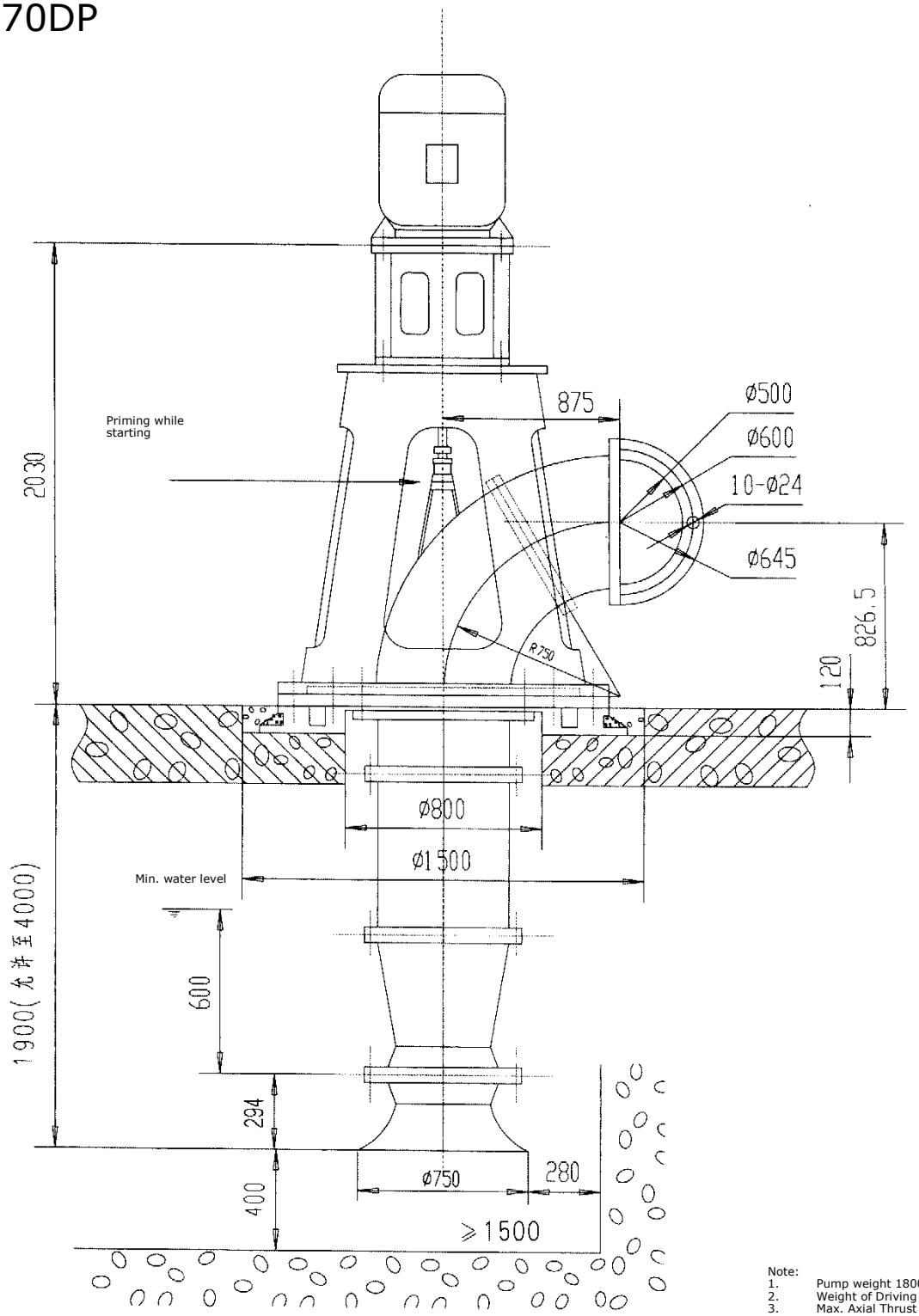

Note:
1. Pump weight 1800 kg, Rotor weight 140 kg
2. Weight of Driving system 140 kg
3. Max. Axial Thrust 1700 kg

600ZLB-70
600ZLB-100
600ZLB-125
600ZLB-160

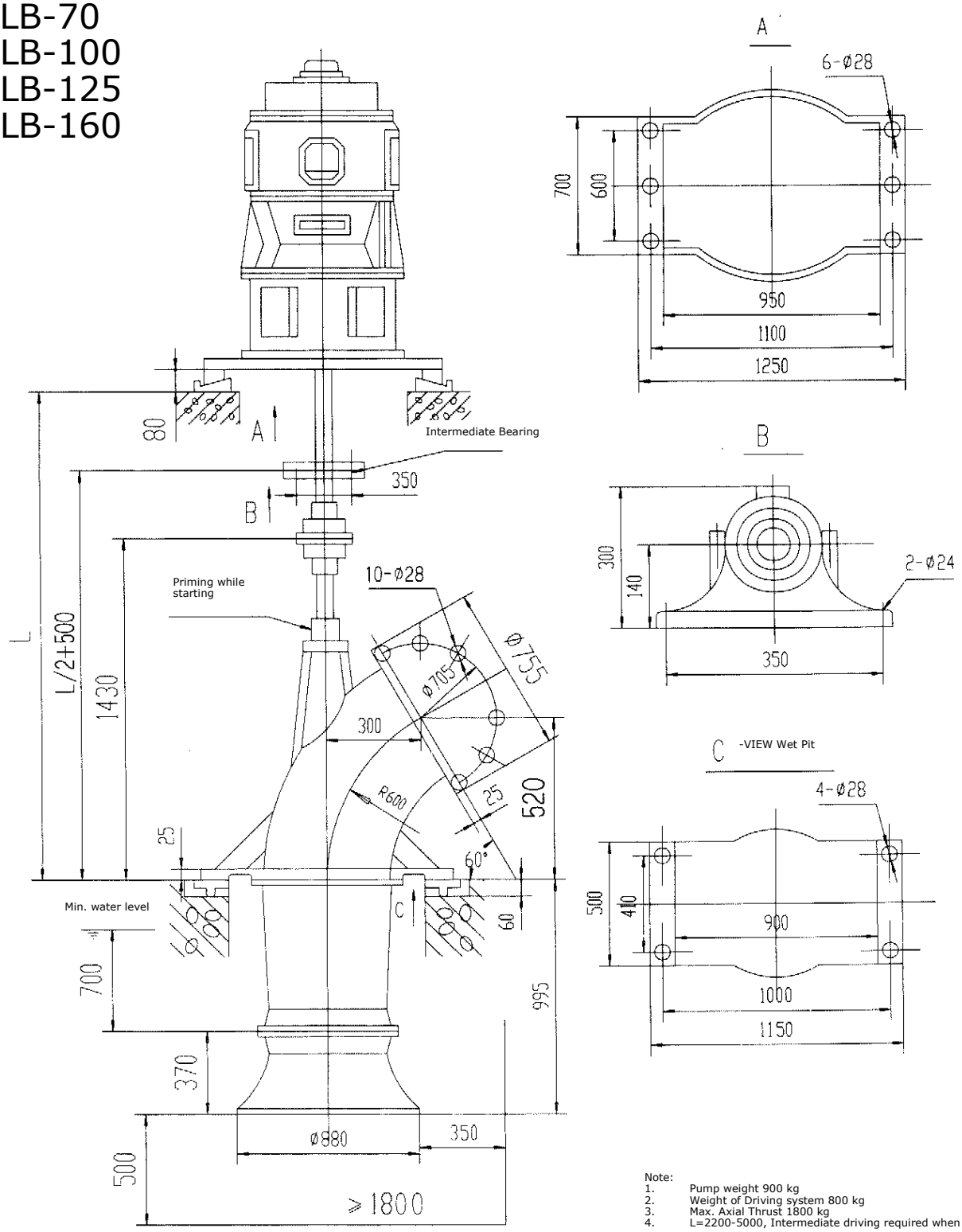

Note:
1. Pump weight 900 kg
2. Weight of Driving system 800 kg
3. Max. Axial Thrust 1800 kg
4. L=2200-5000, Intermediate driving required when L>=3500 mm

700ZLB-70
700ZLB-160

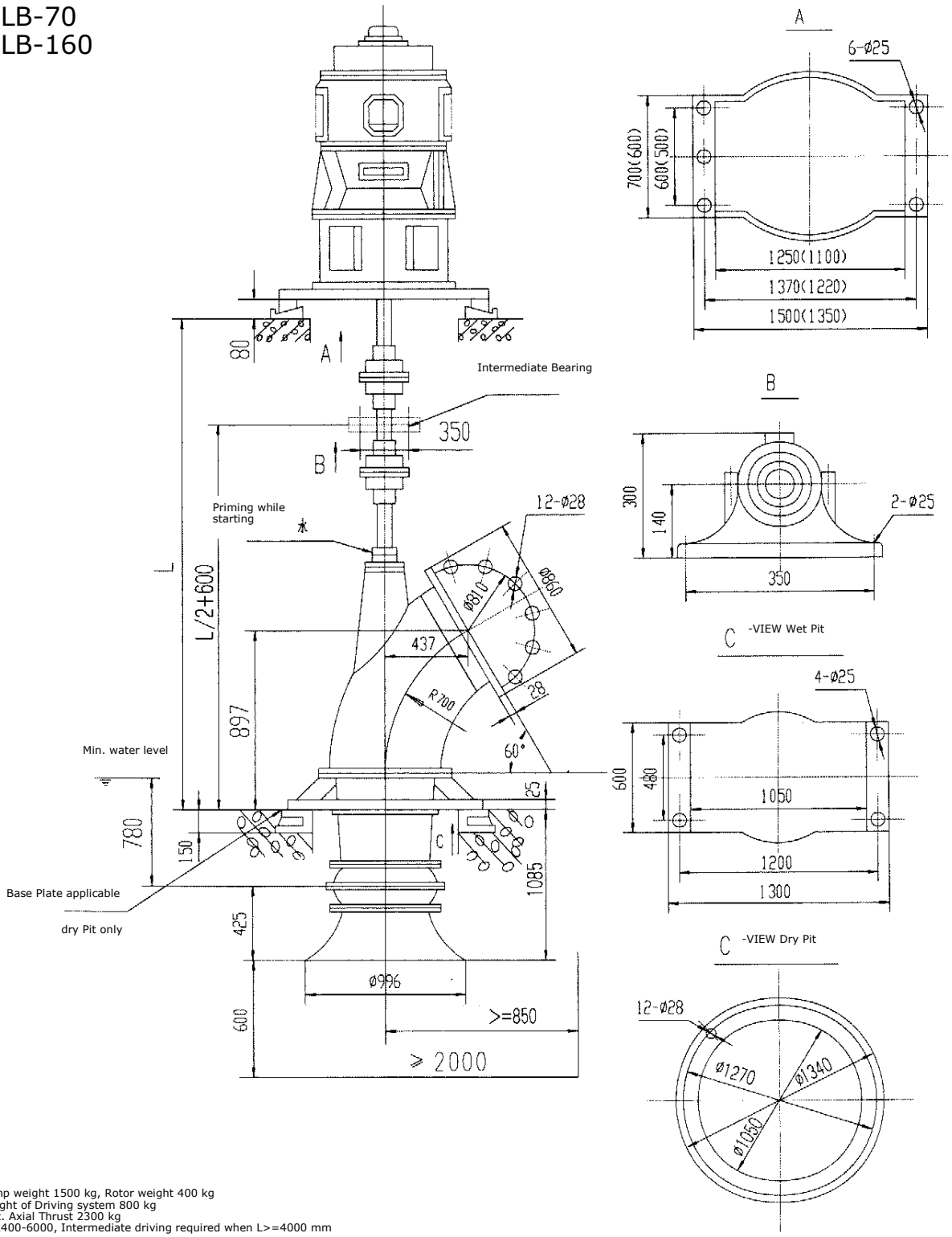

Note:
1. Pump weight 1500 kg, Rotor weight 400 kg
2. Weight of Driving system 800 kg
3. Max. Axial Thrust 2300 kg
4. L=2400-6000, Intermediate driving required when L>=4000 mm

700ZLB-100
700ZLB-125

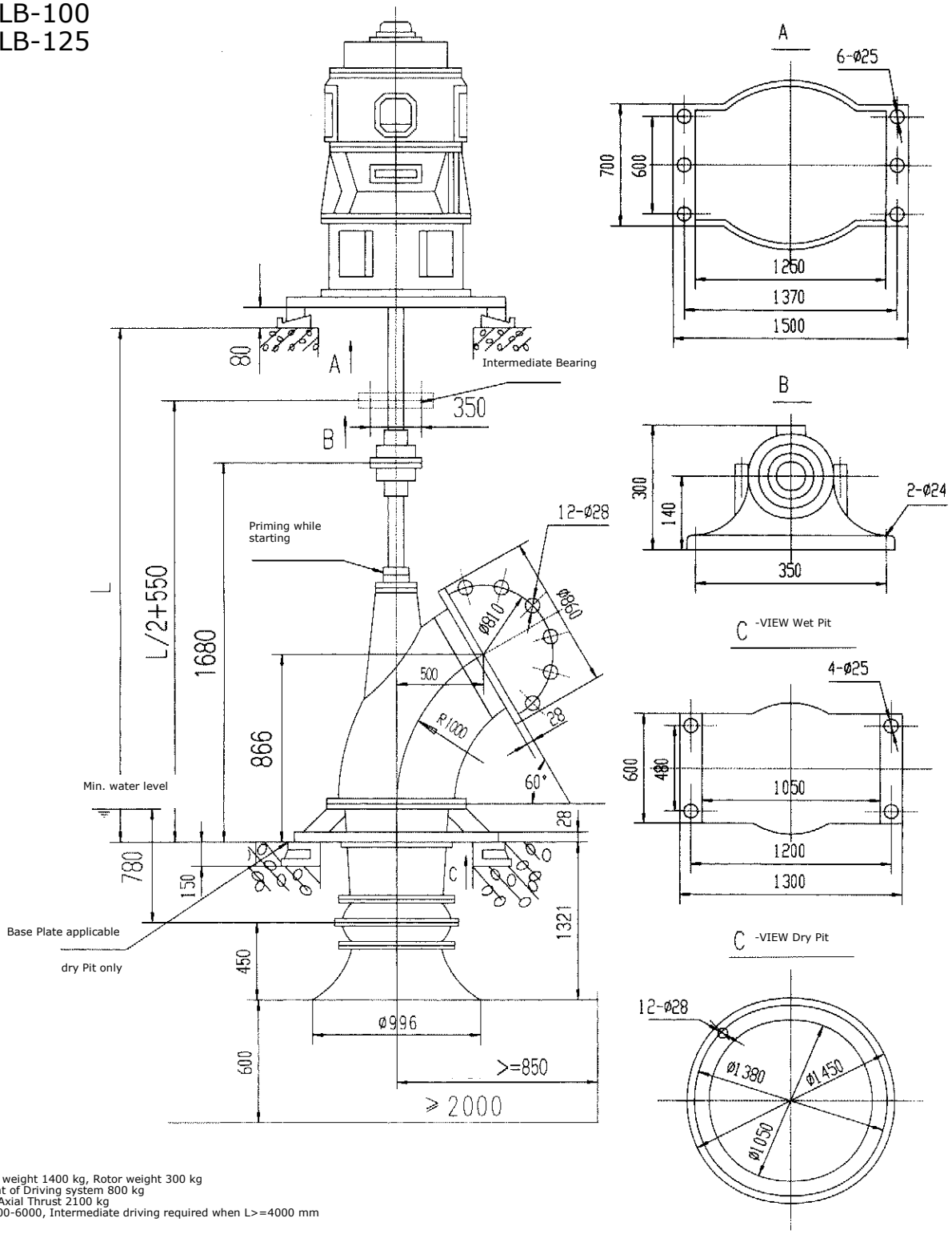

Note:
1. Pump weight 1400 kg, Rotor weight 300 kg
2. Weight of Driving system 800 kg
3. Max. Axial Thrust 2100 kg
4. L=2400-6000, Intermediate driving required when L>=4000 mm

800ZLB-70
800ZLB-100
800ZLB-125

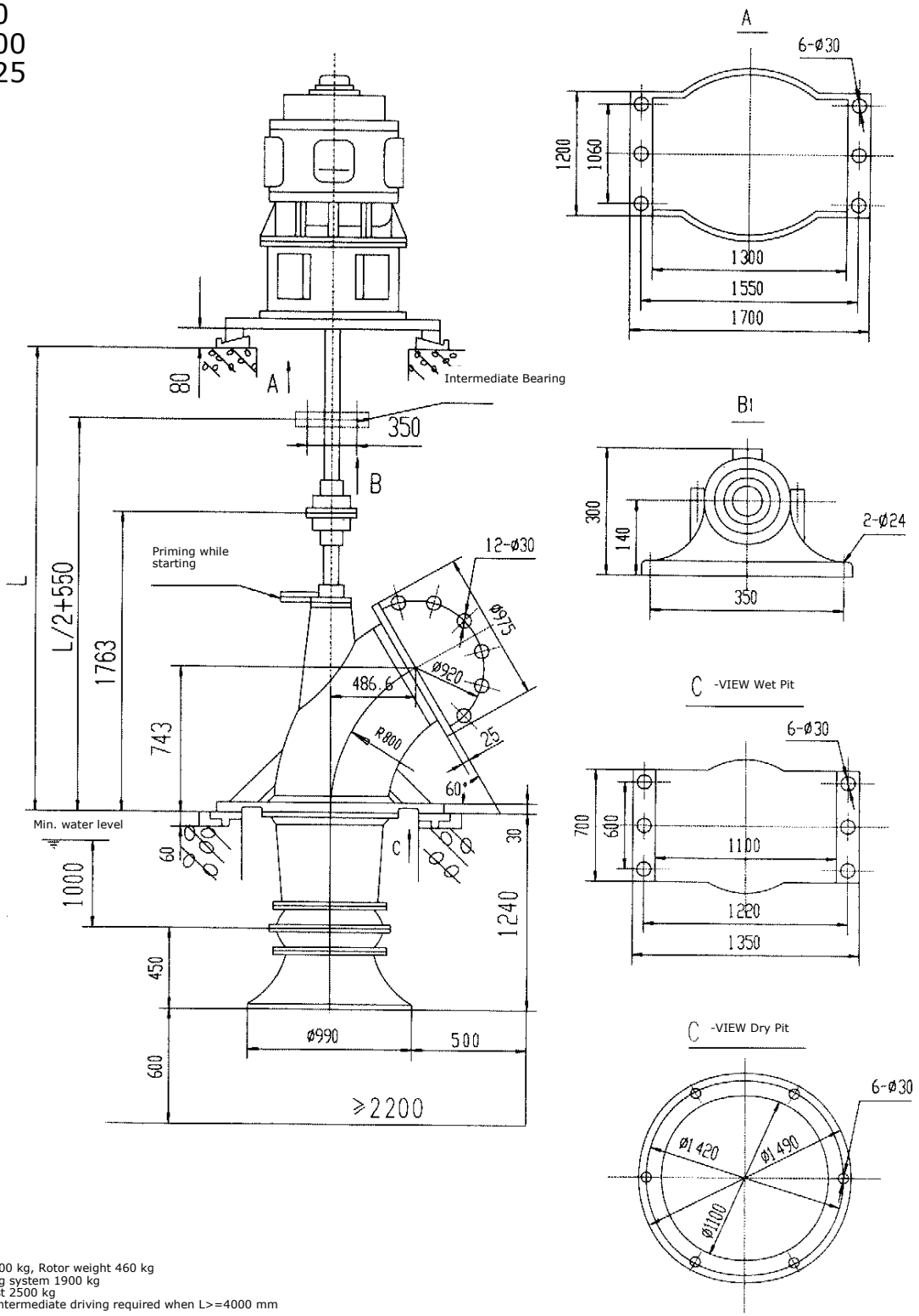

Note:
1. Pump weight 2000 kg, Rotor weight 460 kg
2. Weight of Driving system 1900 kg
3. Max. Axial Thrust 2500 kg
4. L=2400-6000, Intermediate driving required when L>=4000 mm

900ZLB-70H
900ZLB-100
900ZLB-125

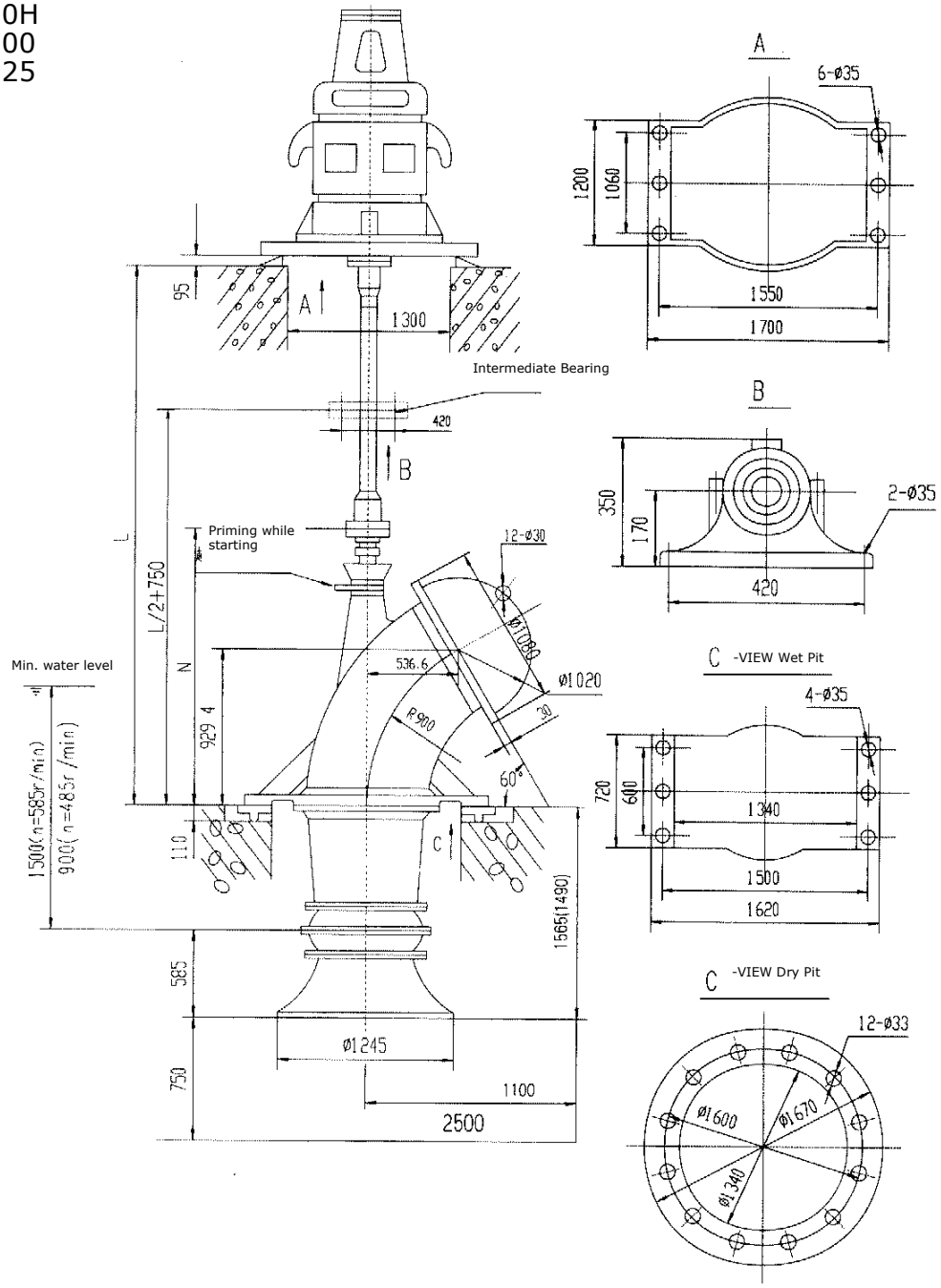

Length of N

900ZLB-70H	900ZLB-100	900ZLB-125
2055	2000	1981

Note:
1. Pump weight 2200 kg, Rotor weight 650 kg
2. Weight of Driving system 1900 kg
3. Max. Axial Thrust 3500 kg
4. L=2000-6000, Intermediate driving required when L>=4000 mm

900ZLB-160

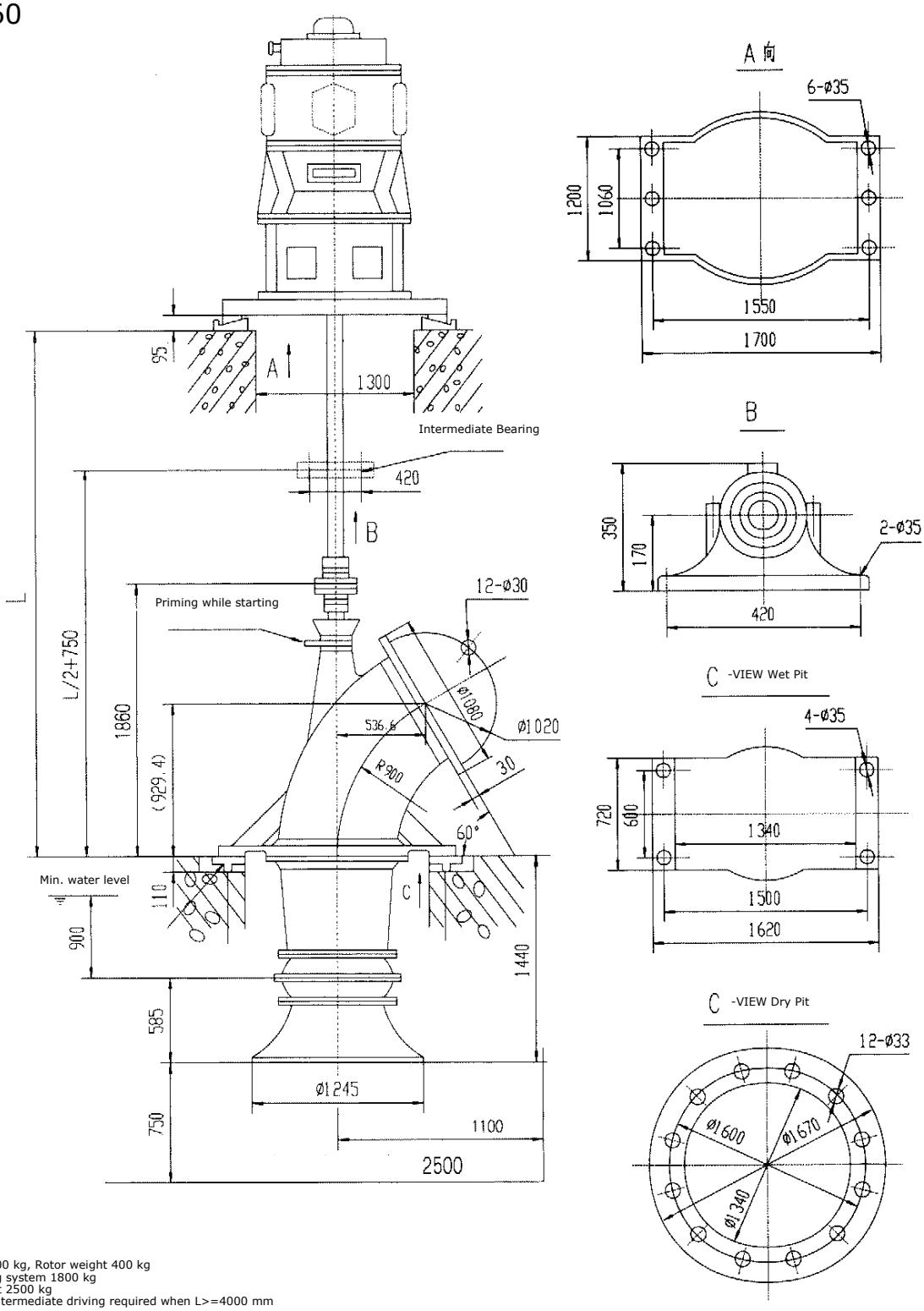

Note:
1. Pump weight 2000 kg, Rotor weight 400 kg
2. Weight of Driving system 1800 kg
3. Max. Axial Thrust 2500 kg
4. L=2500-6000, Intermediate driving required when L>=4000 mm

®

1000ZLB-70
1000ZLB—100
1000ZLB—125

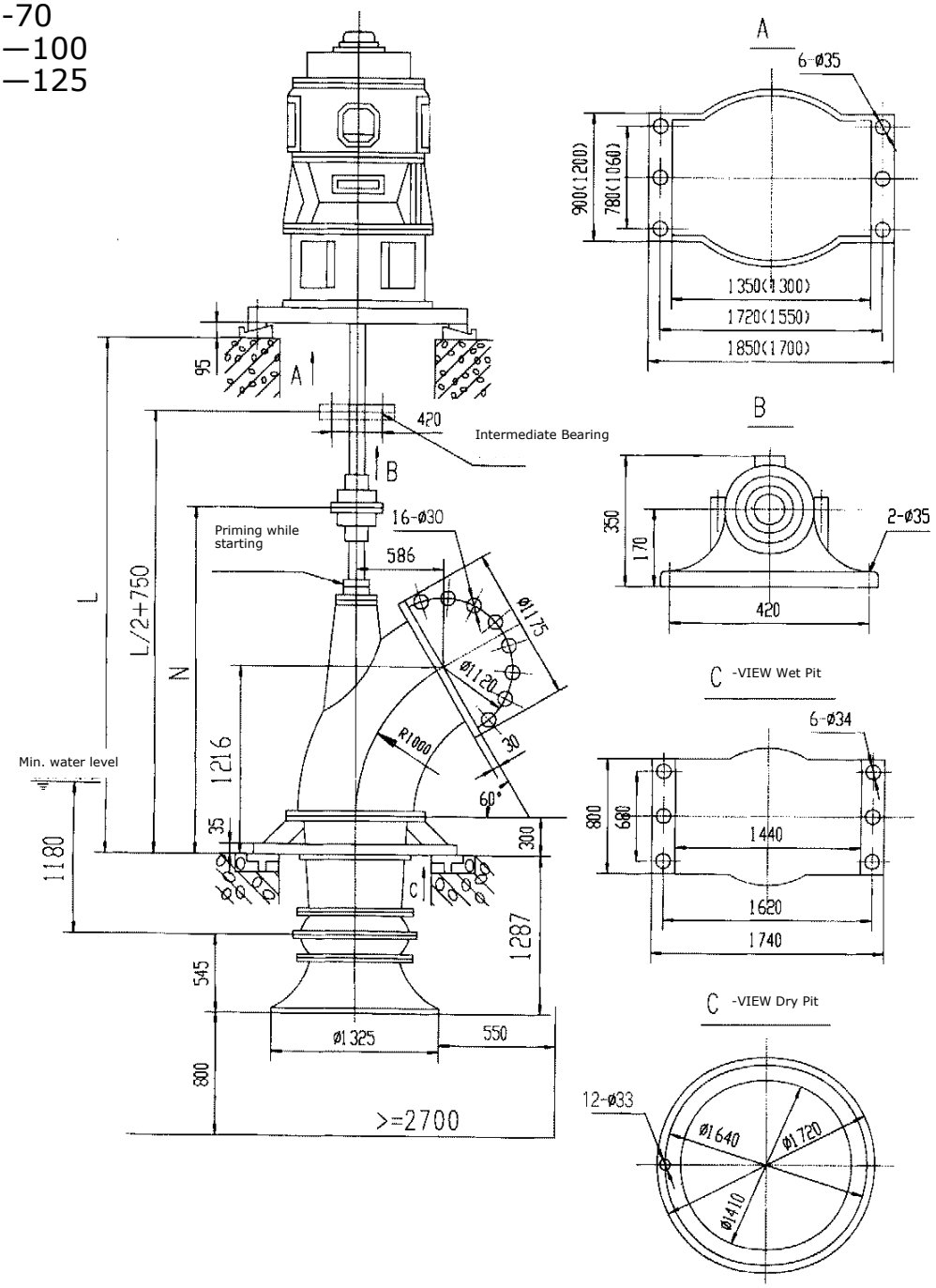

Length of N

1000ZLB-70	1000ZLB-100	1000ZLB-125
2184	2203	2208

Note:
1. Pump weight 2600 kg, Rotor weight 700 kg
2. Weight of Driving system 1900 kg
3. Max. Axial Thrust 4000 kg
4. L=2400-6000, Intermediate driving required when L>=4000 mm

1200ZLB(Q)-70Z
1200ZLB(Q)-100Z
1200ZLB(Q)-125Z

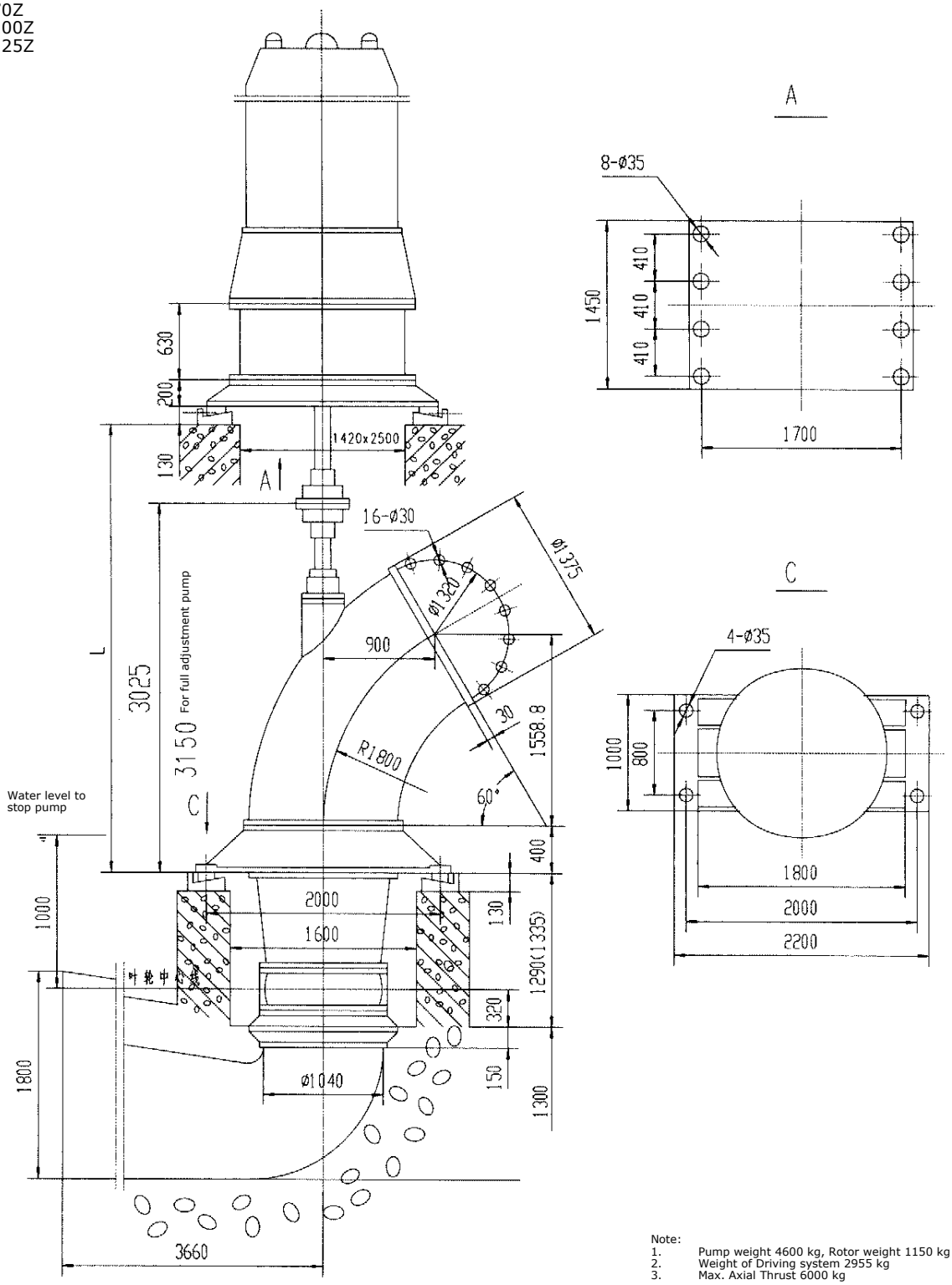

Note:
1. Pump weight 4600 kg, Rotor weight 1150 kg
2. Weight of Driving system 2955 kg
3. Max. Axial Thrust 6000 kg

®

1200ZLB(Q)-70
1200ZLB(Q)-100
1200ZLB(Q)-125

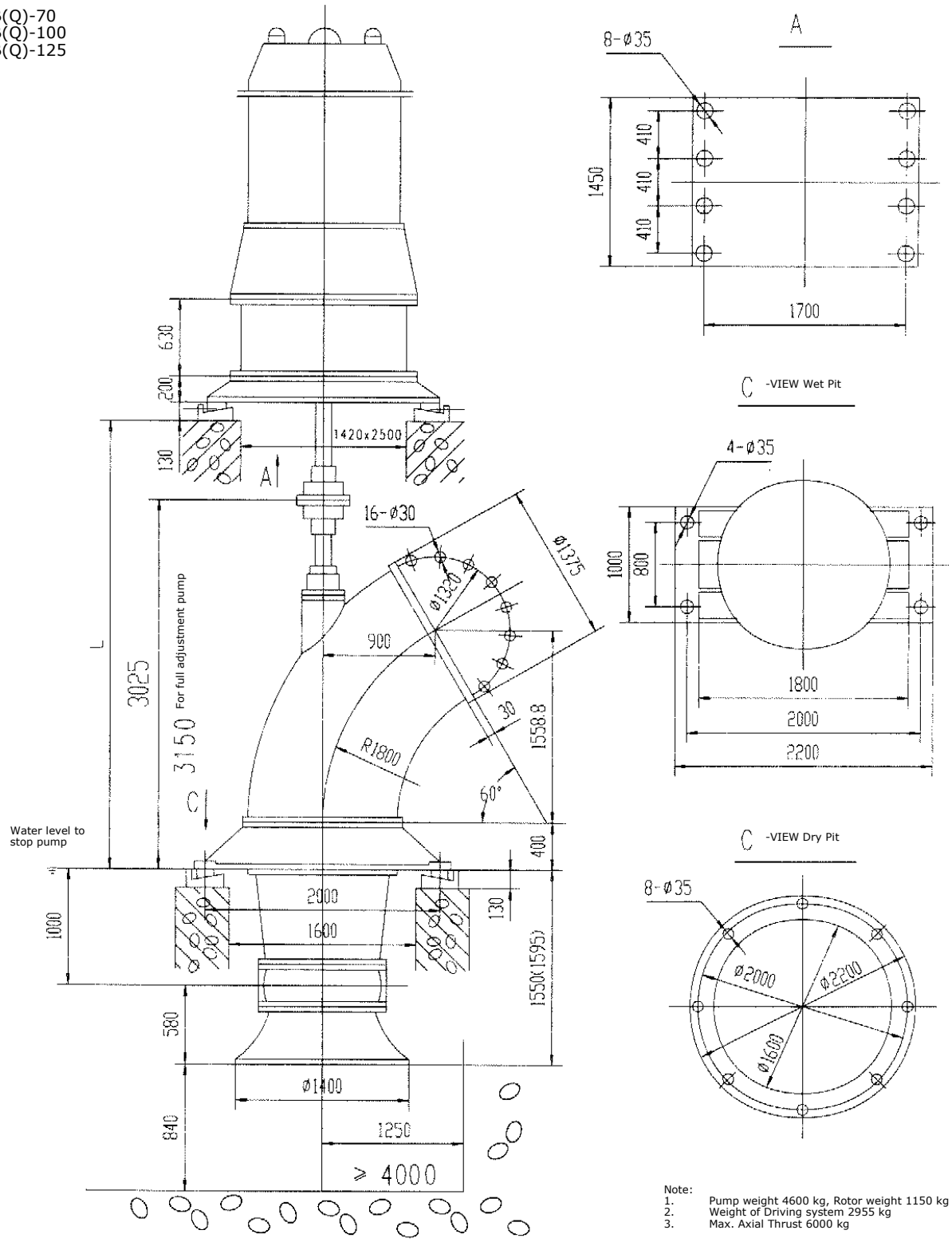

Note:
1. Pump weight 4600 kg, Rotor weight 1150 kg
2. Weight of Driving system 2955 kg
3. Max. Axial Thrust 6000 kg

1400ZLB(Q)5-5
1400ZLB5.5-3.5

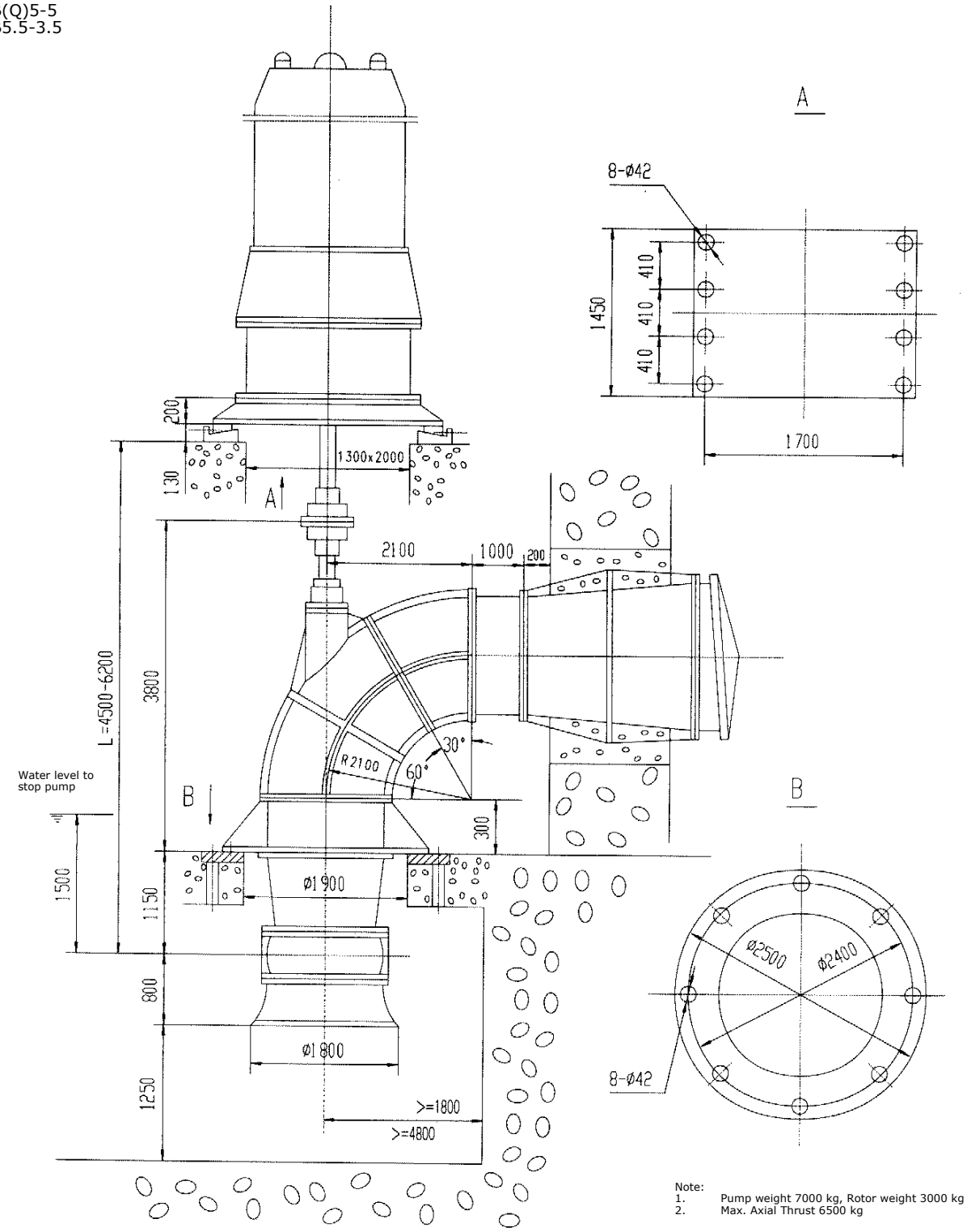

Note:
1. Pump weight 7000 kg, Rotor weight 3000 kg
2. Max. Axial Thrust 6500 kg

1400ZLB(Q)5.5-7.5

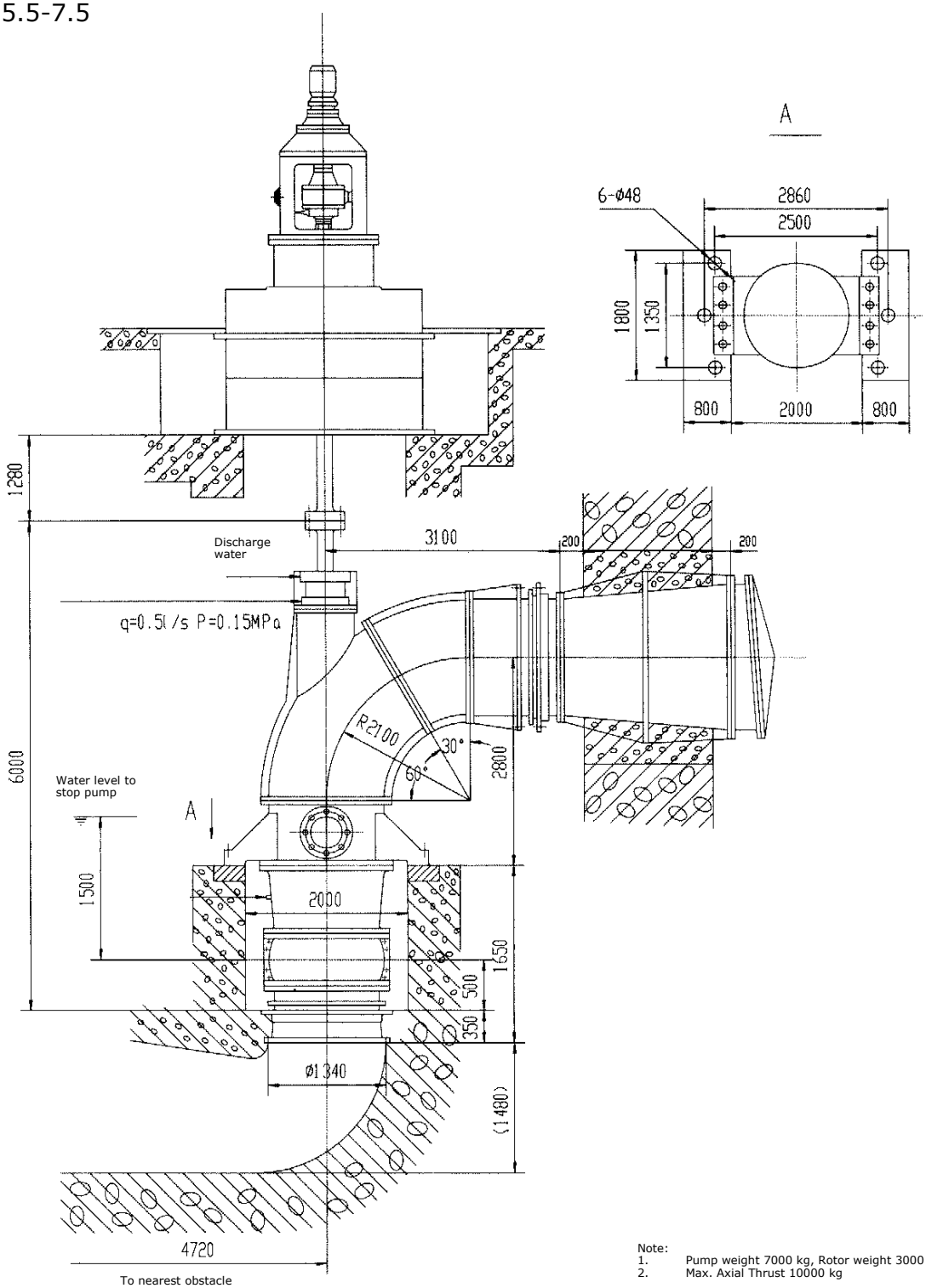

Note:
1. Pump weight 7000 kg, Rotor weight 3000 kg
2. Max. Axial Thrust 10000 kg

1600ZLQ(B)

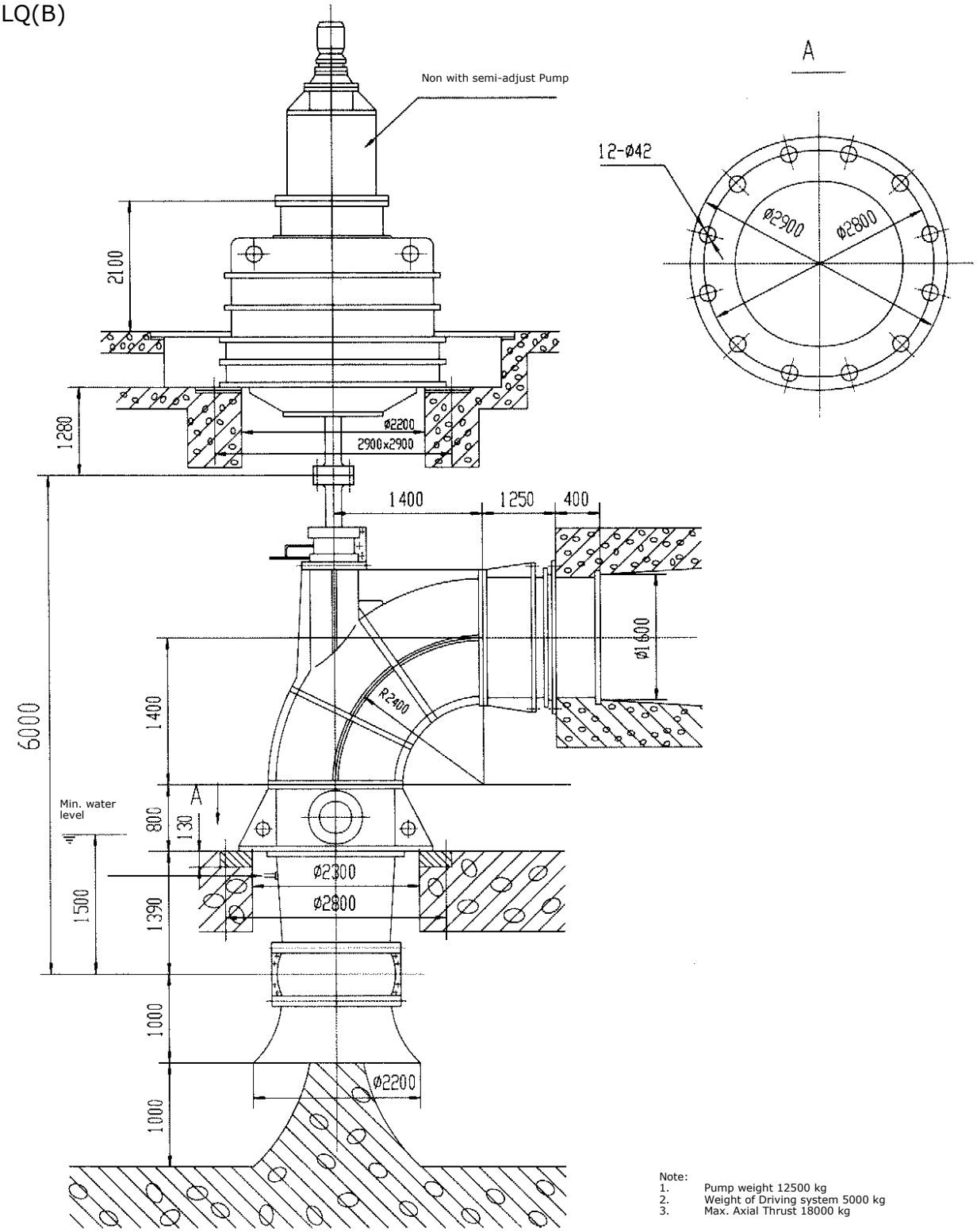

Note:
1. Pump weight 12500 kg
2. Weight of Driving system 5000 kg
3. Max. Axial Thrust 18000 kg

Check valve Dimension

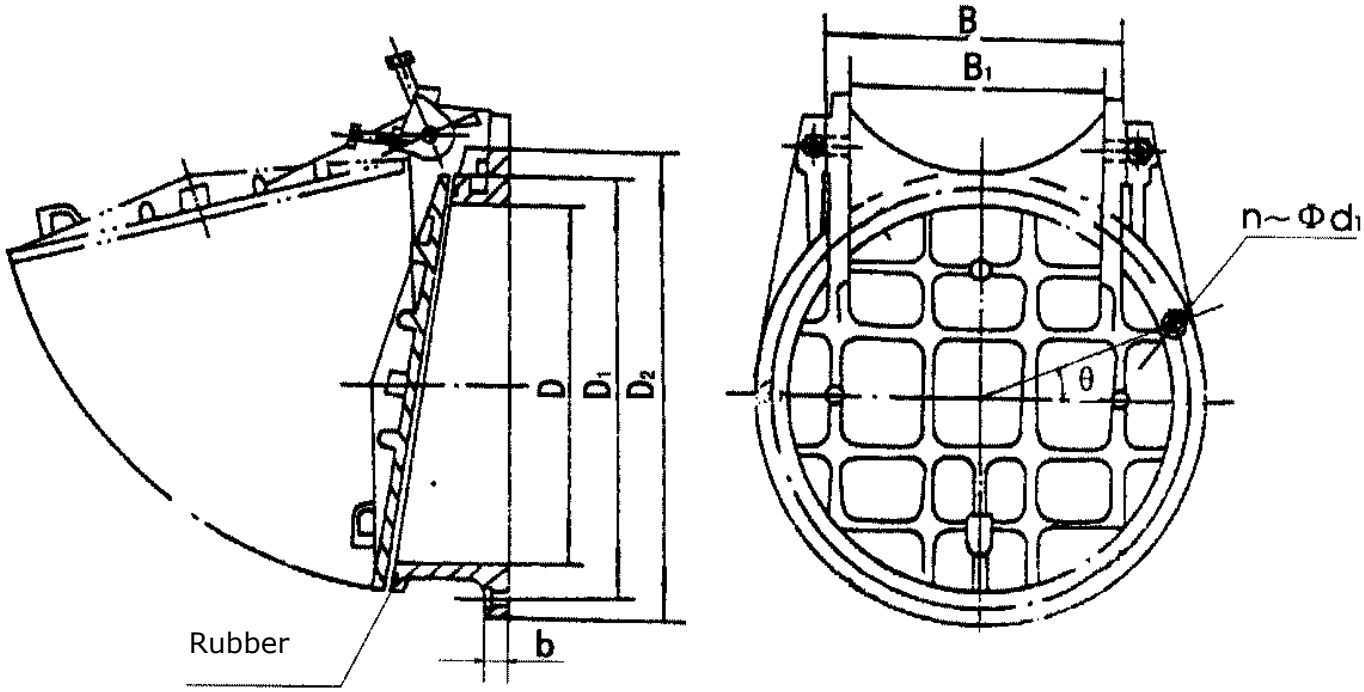

Valve Series	Installation Dimensions								
	Spec.	B	B_1	D	D_1	D_2	b	n-ϕd_1	θ
350	350	300	240	350	445	485	22	6-ϕ24	30°
500	550	470	400	550	655	710	25	10-ϕ24	0°
600	600	470	400	600	705	755	25	10-ϕ28	0°
700	800	470	390	800	920	975	25	12-ϕ30	15°
800	900	470	390	900	1020	1075	30	12-ϕ30	15°
900	1200	600	440	1200	1320	1375	30	16-ϕ30	11.25°
1000	1200	600	440	1200	1320	1375	30	16-ϕ30	11.25°
1200	1400	720	540	1400	1320	1375	30	18-ϕ30	10°

Tel: (+8610)51906628
Fax:(+8610)88580150
E-mail : export@v-flo.com