V-FLO®

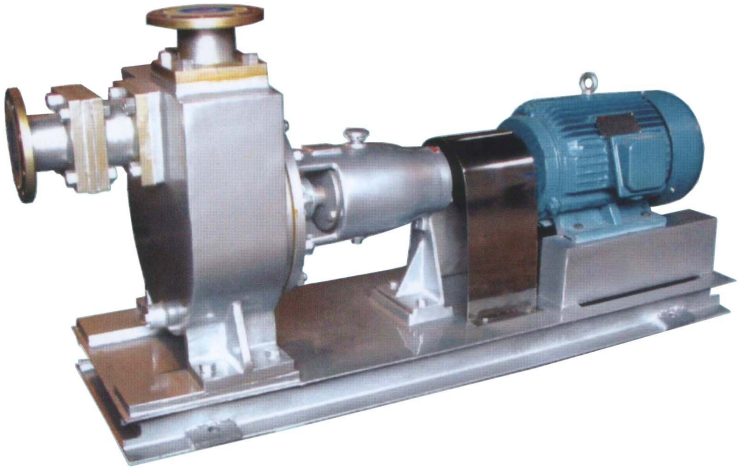

ZX

Self-priming Sewage Pump

Pump Specifications
Size : - 1.5" to 8" (32 mm to 200 mm)
Max Capacity : - 280 m3/hr
Max Head : - 267 ft. (80 m)
Max Solids: - 3" (76 mm)

Materials of Construction:
Cast Iron, Cast St. 316 St., CD4MCu, Alloy 20, Hard Iron

ZX Series Pumps are designed for economical & trouble-free operation in handling solids-laden liquids and slurries. Pumps feature a large volute design which allows them to re-prime automatically in a completely open system without the need of suction or discharge check valves. And this is workable with the pump only partially filled with liquid and completely dry suction line.

Pumps will be able to handle up to 75mm spherical solids, depending on pump models. In case that pump shaft or bearings need service or repair, the entire rotating assembly can be removed without disturbing pump casing or pipelines.

Rotating assembly is sealed with an O-Ring, allowing for external adjustments of clearance.

Application Conditions

Liquid Temp.: -20 ~ 80℃
pH Value: 5 ~ 9 (Cast Iron)
1 ~ 14 (St. St.)
Specific Gravity: up to 1.3
Max Solids: 75mm (3”)
Max Suc. Lift: 7m

Model Nomenclature

e.g.: ZX80-65-200A
ZX — Self-priming Chemical Pump
80 — Suction Dia. (mm)
65 — Discharge Dia. (mm)
200 — Impeller DN (mm)
Variations:
A — Cast Steel
B — Semi-corrosion- proof (St. St. Impeller/ shaft/seal)
P — Complete corrosion-proof (All St. St.)
Y — Oil Application
AR — Hot Water Application

Configuration Drawing

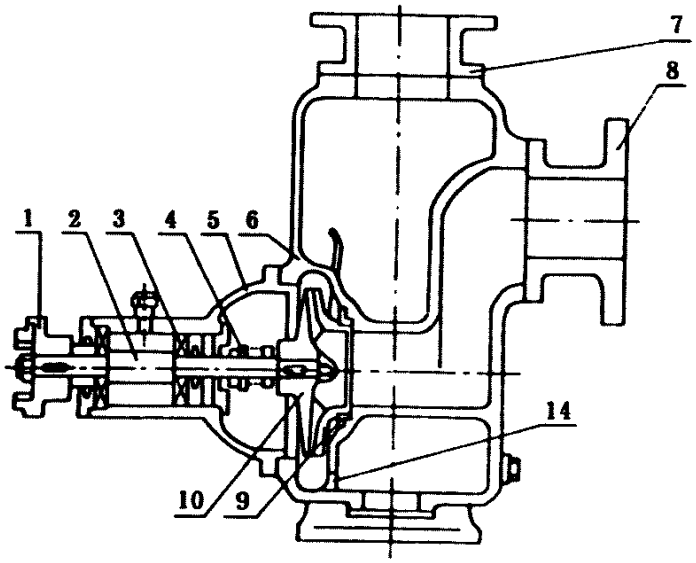

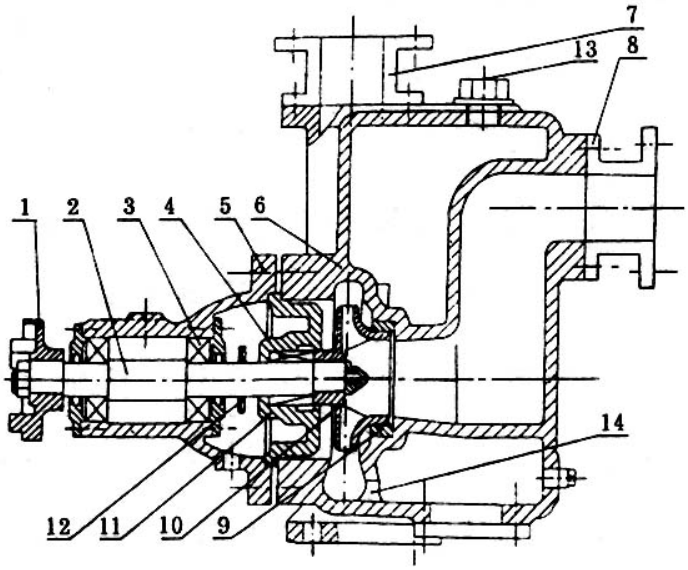

1. Coupling
2. Pump Shaft
3. Bearing
4. Mechanical Seal
5. Bearing Body
6. Pump Cover
7. Discharge Seat
8. Suction Seat
9. Front Wear Ring
10. Impeller
11. Back Cover
12. Deflector
13. Liquid Adding Hole
14. Liquid Returning Hole

Performance Data

Model	Capacity (m3/h)	Head (m)	Speed (r/min)	NPSHr (m)	Suc.Time (min/5m)	Motor Power (KW)
ZX25-25-125	3.2	20	2900			1.1
	1.6	5	1450			0.55
ZX25-25-160	3.2	32	2900			2.2
	1.6	8	1450			0.55
ZX25-25-200	3.2	50	2900			5.5
	1.6	12.5	1450			0.75
ZX25-25-250	3.2	80	2900			7.5
	1.6	20	1450			1.5
ZX32-25-160	3.2	32	2900	3.5	2.0	1.5
ZX32-32-160	3.2	32	2900	3.5	2.0	1.5
ZX32-32-200	6.3	50	2900	3.5	2.0	3
ZX40-32-160	6.3	32	2900	3.5	2.0	2.2
ZX40-40-125	6.3	20	2900	3.5	2.0	1.1
ZX40-32-200	6.3	50	2900	3.5	2.0	3
ZX40-32-250	6.3	80	2900			11
	3.2	20	1450			2.2
ZX40-40-200	6.3	50	2900	3.5	2.0	3
ZX50-32-125	12.5	20	2900			3
	6.3	5	1450			0.55
ZX50-32-160	12.5	32	2900			4
	6.3	8	1450			0.55
ZX50-32-200	12.5	50	2900			7.5
	6.3	12.5	1450			1.1
ZX50-32-250	12.5	80	2900			15
	6.3	20	1450			2.2
ZX50-50-125	15	12	2900	3.5	2.0	1.5
ZX50-50-140	18	20	2900	3.5	2.5	2.2
ZX50-50-160	12.5	32	2900	3.5	2.5	3
ZX50-50-180	10	40	2900	3.5	1.5	4
ZX50-50-200	12.5	50	2900	3.5	1.5	5.5
ZX50-50-230	15	60	2900	3.5	1.5	7.5
ZX50-50-250	15	75	2900	3.5	2.5	11
ZX65-50-125	30	15	2900	3.5	2.0	3
ZX65-50-160	25	32	2900	3.5	2.0	5.5
ZX65-40-200	25	50	2900			11
	12.5	12.5	1450			2.2
ZX65-40-250	25	80	2900			22
	12.5	20	1450			3
ZX65-40-315	25	125	2900			37
	12.5	32	1450			5.5
ZX65-50-200	25	50	2900	3.5	2.5	7.5
ZX65-50-250	25	60	2900	3.5	2.5	11
ZX80-65-120	35	13	2900	4.0	3.5	3

Performance Data

Model	Capacity (m3/h)	Head (m)	Speed (r/min)	NPSHr (m)	Suc.Time (min/5m)	Motor Power (KW)
ZX80-65-125	50	20	2900	4.0	2.0	5.5
ZX80-65-160	50	32	2900	4.0	2.5	7.5
ZX80-50-200	50	50	2900			18.5
	25	12.5	1450			2.2
ZX80-50-250	50	80	2900			37
	25	20	1450			4
ZX80-50-315	50	125	2900			75
	25	32	1450			7.5
ZX80-65-200	60	55	2900	4.0	2.0	18.5
ZX80-65-250	60	70	2900	4.0	1.5	22
ZX100-80-125	100	20	2900	4.0	2.5	11
ZX100-80-160	100	32	2900	4.0	2.0	15
ZX100-65-200	100	50	2900			37
	50	12.5	1450			4
ZX100-65-250	100	80	2900			55
	50	20	1450			5.5
ZX100-65-315	100	125	2900			75
	50	32	1450			11
ZX100-80-180	100	40	2900	4.0	2.0	22
ZX100-80-200	100	65	2900	4.0	2.0	30
ZX100-80-250	70	80	2900	4.0	2.0	30
ZX125-100-200	200	50	2900			55
	100	12.5	1450			7.5
ZX125-100-250	200	80	2900			75
	100	20	1450			11
ZX125-100-315	200	125	2900			110
	100	32	1450			18.5
ZX125-100-400	100	50	1450			37
ZX150-100-125	160	55	2900	4.0	2.0	45
ZX150-100-160	150	80	2900	5.0	2.0	55
ZX150-125-250	200	20	1450			18.5
ZX150-125-315	200	32	1450			37
ZX150-125-400	200	50	1450			75
ZX200-125-250	400	20	1450			55
ZX200-150-315	400	32	1450			75

Installation Drawings & Dimensions

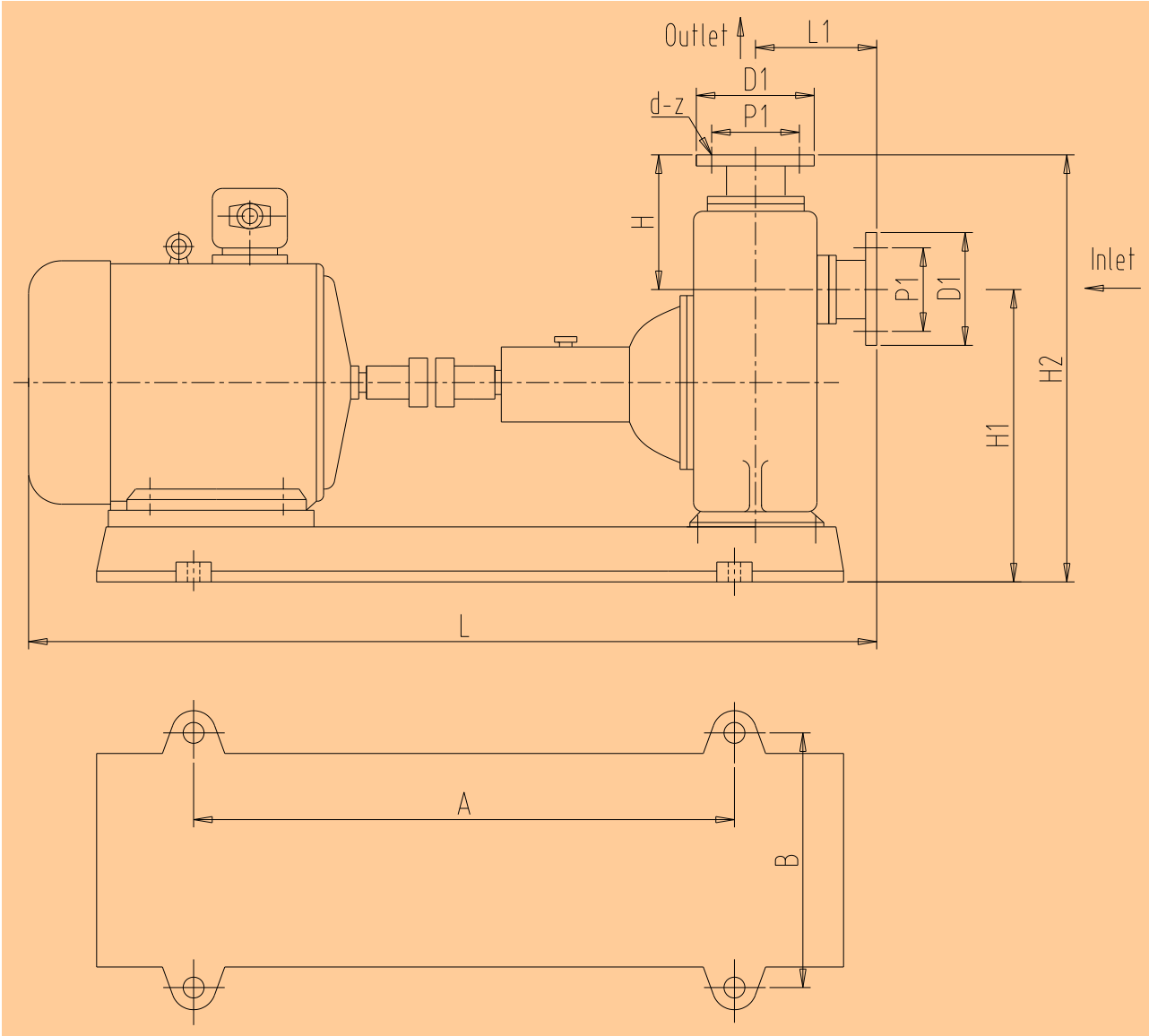

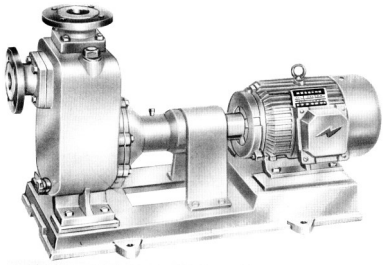

Family Curves

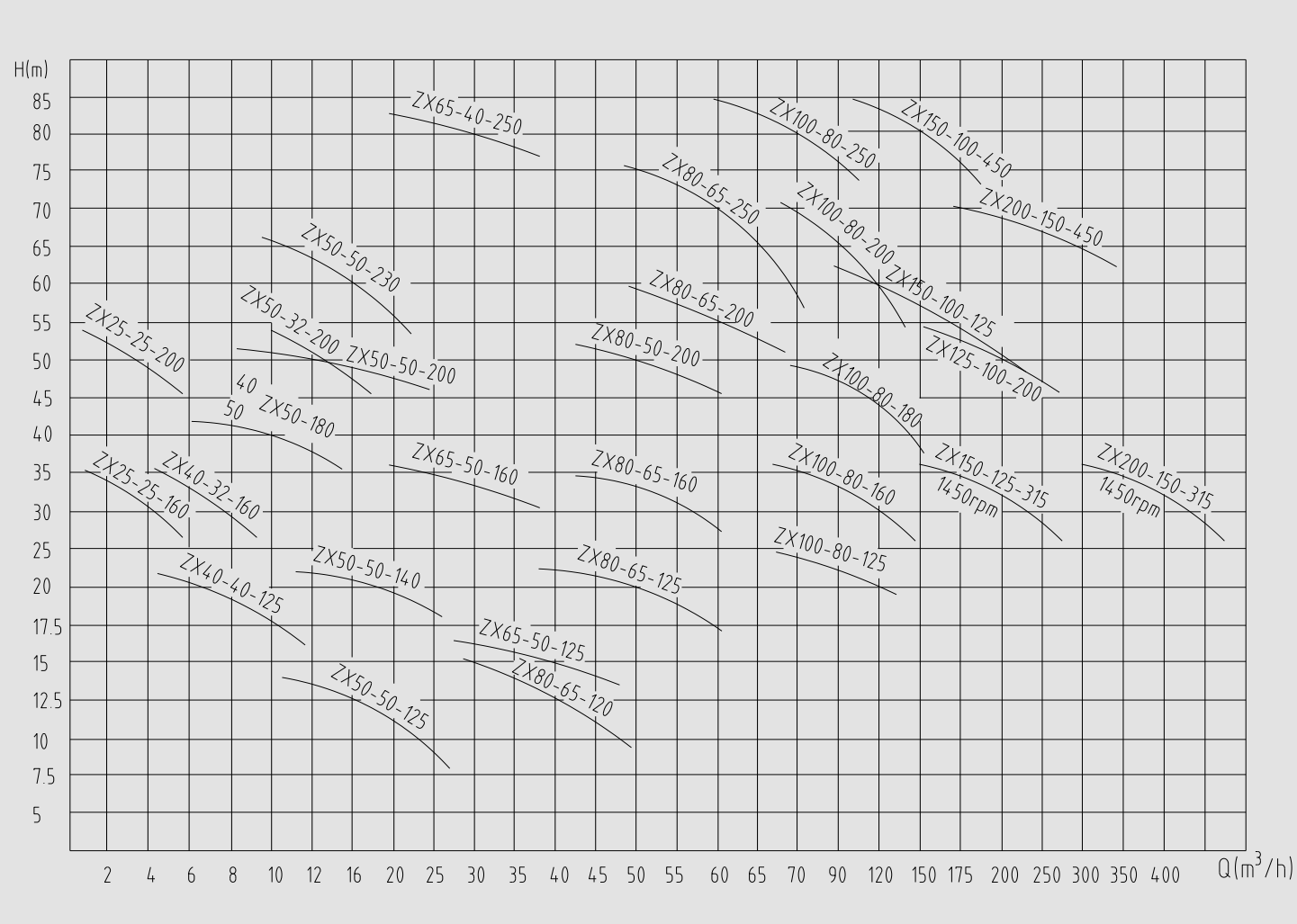

Installation Dimensions

Model	Suc.Flange			Dis.Flange			Hole Distance AxB	Hole Dia. X No. of Holes	Central Distance				
	D_1	P_1	d-z	D_1	P_1	d-z			H	H_1	H_2	L	L_1
ZX25-25-125	115	85	14.5-4	115	85	14.5-4				270	410	1000	185
	115	85	14.5-4	115	85	14.5-4				270	410	910	185
ZX25-25-160	115	85	14.5-4	115	85	14.5-4				290	500	1000	185
	115	85	14.5-4	115	85	14.5-4				290	500	910	185
ZX25-25-200	115	85	14.5-4	115	85	14.5-4				315	495	1100	185
	115	85	14.5-4	115	85	14.5-4				315	495	1020	185
ZX25-25-250	115	85	14.5-4	115	85	14.5-4				355	585	1320	185
	115	85	14.5-4	115	85	14.5-4				355	585	1150	185
ZX32-25-160	120	90	14-4	120	90	14-4	360X340	16X4	145	310	465	720	135
ZX32-32-160	120	90	14-4	120	90	14-4	360X340	16X4	145	310	465	720	135
ZX32-32-200	130	100	14-4	130	100	14-4	400X330	18X4	170	340	480	820	140
ZX40-32-160	120	90	14-4	120	90	14-4	360X340	16X4	145	310	465	720	135
ZX40-40-200	130	100	14-4	130	100	14-4	360X280	16X4	140	310	435	760	135
ZX40-32-200	130	100	14-4	120	90	14-4	400X330	18X4	170	340	480	820	140
ZX40-40-125	130	100	14-4	130	100	14-4	400X330	18X4	150	340	480	820	140
ZX40-32-250	145	110	17.5-4	140	100	17.5-4				350	570	1420	220
	145	110	17.5-4	140	100	17.5-4				350	570	1210	220
ZX50-32-125	165	125	17.5-4	140	100	17.5-4				310	430	1000	230
	165	125	17.5-4	140	100	17.5-4				310	430	910	230
ZX50-32-160	165	125	17.5-4	140	100	17.5-4				330	470	1000	230
	165	125	17.5-4	140	100	17.5-4				330	470	910	230
ZX50-32-200	165	125	17.5-4	140	100	17.5-4				360	510	1200	230
	165	125	17.5-4	140	100	17.5-4				360	510	1080	230
ZX50-32-250	165	125	17.5-4	140	100	17.5-4				400	595	1420	250
	165	125	17.5-4	140	100	17.5-4				400	595	1210	250
ZX50-50-125	140	110	14-4	140	110	14-4	400X280	16X4	145	315	450	750	130
ZX50-50-140	140	110	14-4	140	110	14-4	400X280	16X4	145	305	436	730	132
ZX50-50-160	140	110	14-4	140	110	14-4	400X330	18X4	150	340	480	820	140
ZX50-50-180	140	110	14-4	140	110	14-4	460X360	18X4	150	370	460	840	135
ZX50-50-200	140	110	14-4	140	110	14-4	460X380	18X4	150	365	510	920	140
ZX50-50-230	160	125	18-4	160	125	18-4	500X360	18X4	170	410	580	1000	165
ZX50-50-250	160	125	18-4	160	125	18-4	640X430	18X4	180	440	640	1200	165
ZX65-50-125	160	130	18-4	140	110	14-4	480X360	16X4	130	330	420	810	140
ZX65-50-160	160	130	18-4	140	110	14-4	460X380	18X4	160	370	510	930	145
ZX65-40-200	185	145	17.5-4	145	110	17.5-4				380	550	1300	270
	185	145	17.5-4	145	110	17.5-4				380	550	1010	270
ZX65-40-250	185	145	17.5-4	145	110	17.5-4				420	620	1425	270
	185	145	17.5-4	145	110	17.5-4				420	620	1200	270
ZX65-40-315	185	145	17.5-4	145	110	17.5-4				440	660	1600	295
	185	145	17.5-4	145	110	17.5-4				440	660	1300	295
ZX65-50-200	160	130	18-4	140	110	14-4	460X380	18X4	165	395	540	940	145
ZX65-50-250	185	145	18-4	160	125	18-4	640X430	18X4	180	420	600	1200	170
ZX80-65-120	185	150	18-4	160	130	14-4	480X360	16X4	145	340	420	735	145
ZX80-65-125	185	150	18-4	160	130	14-4	460X380	18X4	160	375	530	950	150
ZX80-65-160	185	150	18-4	160	130	14-4	460X380	18X4	175	400	550	950	150

Installation Dimensions

Model	Suc.Flange			Dis.Flange			Hole Distance AxB	Hole Dia. X No. of Holes	Central Distance				
	D_1	P_1	d-z	D_1	P_1	d-z			H	H_1	H_2	L	L_1
ZX80-50-200	200	160	17.5-8	165	125	17.5-4				410	590	1520	270
	200	160	17.5-8	165	125	17.5-4				410	590	1180	270
ZX80-50-250	200	160	17.5-8	165	125	17.5-4				420	620	1558	270
	200	160	17.5-8	165	125	17.5-4				420	620	1380	270
ZX80-50-315	200	160	17.5-8	165	125	17.5-4				505	725	1768	300
	200	160	17.5-8	165	125	17.5-4				465	685	1450	300
ZX80-65-200	195	160	18-4	185	145	18-4	700X450	18X4	185	460	640	1270	185
ZX80-65-250	195	160	18-4	185	145	18-4	700X450	18X4	190	480	670	1300	185
ZX100-80-125	205	170	18-4	185	150	18-4	600X415	18X4	170	420	590	1150	180
ZX100-80-160	205	170	18-4	185	150	18-4	600X415	18X4	180	440	620	1130	180
ZX100-65-200	220	180	17.5-8	185	145	17.5-4				440	650	1573	300
	220	180	17.5-8	185	145	17.5-4				430	640	1300	300
ZX100-65-250	220	180	17.5-8	185	145	17.5-4				500	730	1730	320
	220	18	17.5-8	185	145	17.5-4				460	690	1470	320
ZX100-65-315	220	180	17.5-8	185	145	17.5-4				525	705	2150	320
	220	180	17.5-8	185	145	17.5-4				525	705	1750	320
ZX100-80-180	205	170	18-4	185	150	18-4	700X460	18X4	190	470	660	1350	195
ZX100-80-200	215	180	18-8	195	160	18-8	780X520	18X4	190	520	710	1445	195
ZX100-80-250	215	180	18-8	195	160	18-8	780X520	18X4	195	525	720	1150	200
ZX125-100-200	220	180	17.5-8	250	210	17.5-8				945	685	1970	490
	220	180	17.5-8	250	210	17.5-8				900	640	1820	490
ZX125-100-250	220	180	17.5-8	250	210	17.5-8				950	690	2210	490
	220	180	17.5-8	250	210	17.5-8				950	660	1760	490
ZX125-100-315	220	180	17.5-8	250	210	17.5-8				950	690	1900	490
ZX125-100-400	220	180	17.5-8	250	210	17.5-8				750	1010	1980	490
ZX150-100-125	260	225	18-8	215	180	18-8	800X550	18X4	220	550	765	1165	300
ZX150-100-160	260	225	18-8	215	180	18-8	900X600	18X4	170	665	820	1174	300
ZX150-125-250	285	240	22-8	250	210	22-8				730	1030	1920	530
ZX150-125-315	285	240	22-8	250	210	22-8				760	1060	1980	530
ZX150-125-400	285	240	22-8	250	210	22-8				820	1120	2100	530
ZX200-125-250	340	295	22-12	285	240	22-8				970	1350	2260	710
ZX200-150-315	340	295	22-12	285	240	22-8				970	1350	2380	750
ZX200-150-400	340	295	22-12	285	240	22-8				970	1350	2380	750
ZX200-200-160	315	280	18-8	260	225	18-8	1000X750	18X4	220	780	970	1220	400

Tel: (+8610)88580010/20/30/80/90
Fax:(+8610)88580150
E-mail : export@v-flo.com