V-FLO®

ZX

Wet Pit Slurry Sump Pump

V-FLO PUMPS & SYSTEMS COMPANY LIMITED

WWW.V-FLO.COM

Features:

- Optimized CAD design greatly increased the MTBE.
- Perfect hydraulic performance with high efficiency and low wearing.
- Spacious passageway shall ensure a non-clog operation.
- No need of any shaft and water sealing, normal operation even without sufficient suction.
- TIMKEN bearings utilized to ensure long-term and stable operation.
- Multiple driven and coupling choices available, direct coupling or belt driven with variable frequency speed regulations.

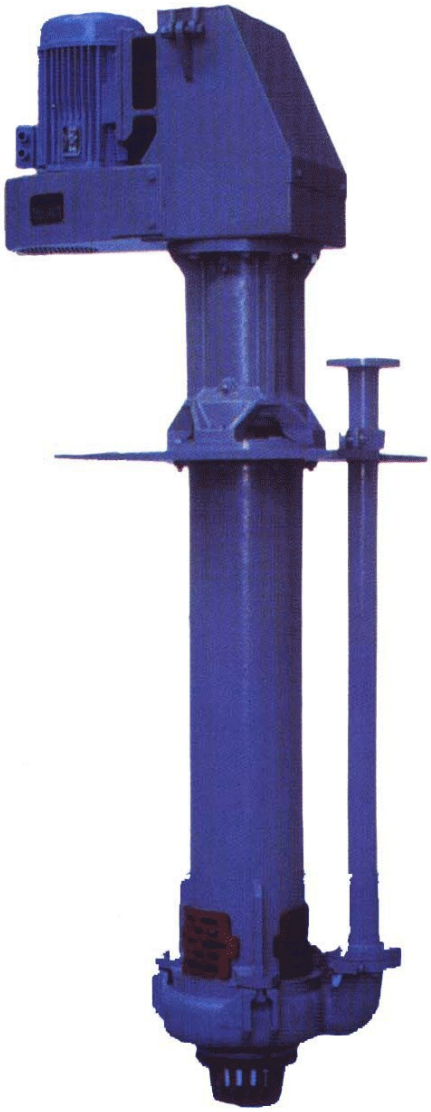

Type ZX is designed for high content slurries with large and abrasive dross and dregs in power thermal plants, mines, metallurgy, coal industry and building materials etc.. The vertical wet pit construction with single cantilever shall be free of cavitations concern.

The pump casing of type **SP** pumps is made of wear-resistant alloy and the impeller can be made of wear-resistant alloy, rubber or polyurethane.

All parts submerged in sump for type **SPR** pumps shall be rubber lined for corrosive slurry applications

ZX Type Pump Configuration Diagram

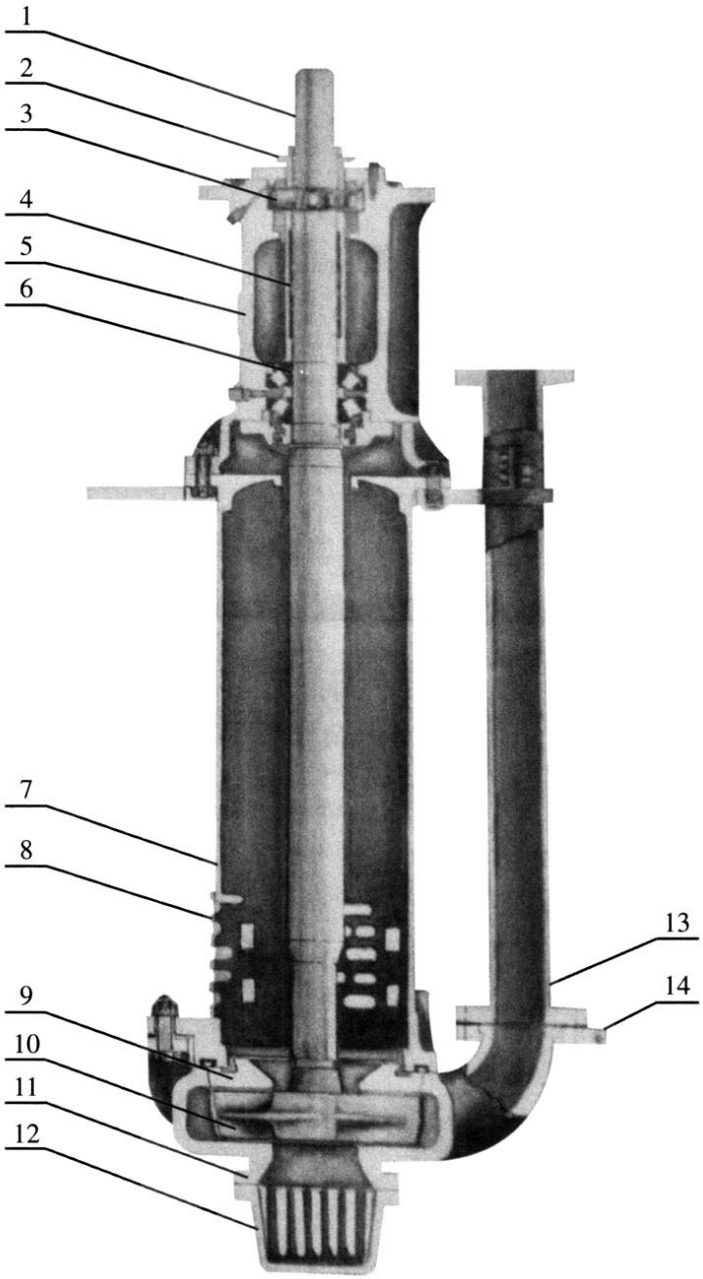

Model Nomenclature
E.G.: 100ZX-SP/SPR
100 – Discharge Dia.(mm)
Z – Slurry Pump
X – Wet Pit Operation
SP — Alloy Construction
SPR — Rubber Lined

1. Pump Shaft
2. Labyrinth Sleeve
3. Bearing
4. Bearing Deflect Sleeve
5. Bearing Housing
6. Bearing
7. Pump Supporting Frame
8. Strainer
9. Back Liner Insert
10. Impeller
11. Pump Casing
12. Suction Strainer
13. Discharging Pipe
14. Discharge Wafer Flange

Type SPR Rubber Lined for Acid / Abrasive Application

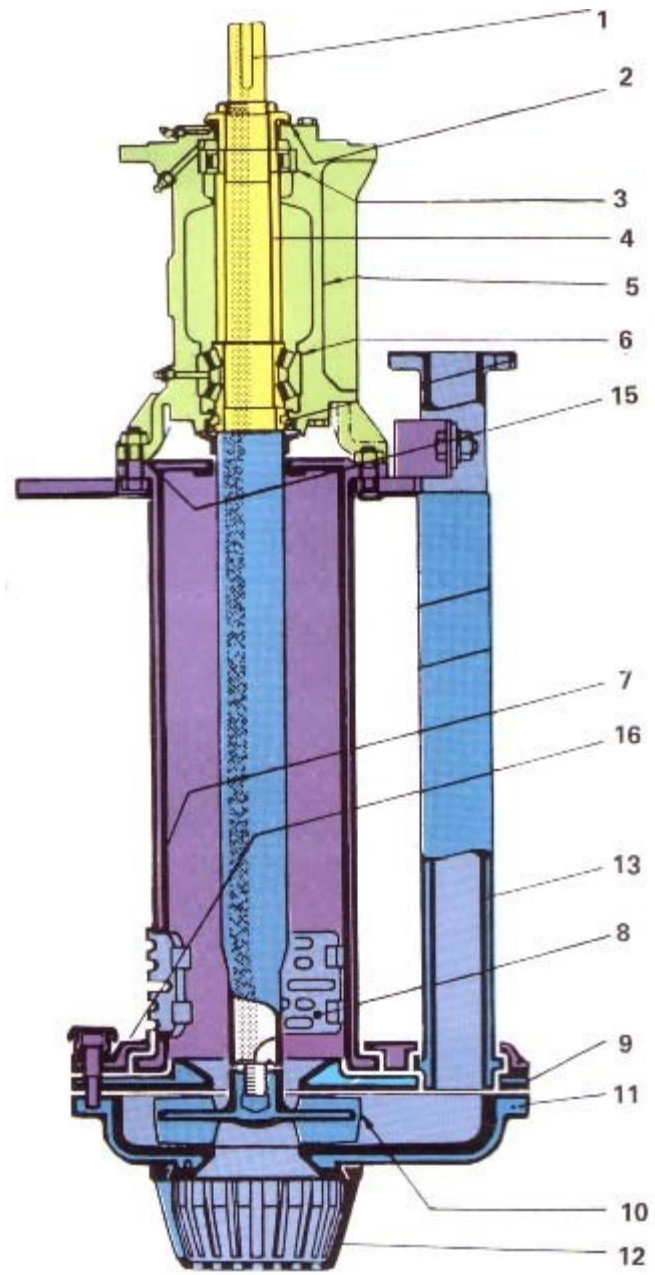

1	Shaft
2	Labyrinth
3	Bearing
4	Bearing spacer
5	Bearing housing
6	Bearing
7	Column
8	Strainer
9	Back liner
10	Impeller
11	Pump casing
12	Lower strainer
13	Discharge pipe
14	Split discharge flange
15	Shim set washer
16	Column clamp

Family Curves

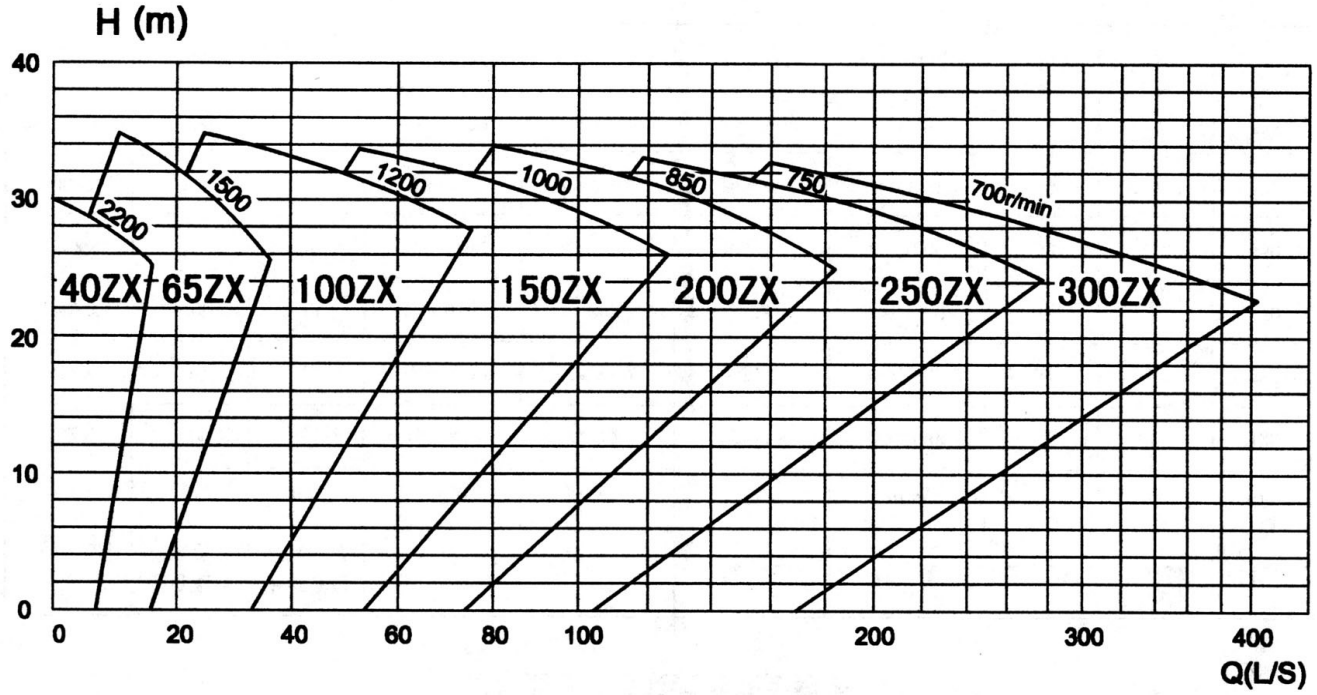

Tested with clean water, for preliminary model selection only.

Performance Data

Model		Max.Power	Max.Solid	Capacity		Head	Speed	Eff.	No. of	Impeller Dia	Material	
		KW	mm	m3/h	l/s	m	r/min	%	Vanes	mm	Protection Bush	Impeller
40ZX	SP	15	12	19.4-43.2	5.4-12	4.5-28.5	1000-2200	40	5	188	M	M/PU
	SPR			17.28-39.6	4.8-11	4-26	1000-2200	40	5	188	RU	RU
65ZX	SP	30	15	23.4-111	6.5-30.8	5-29.5	700-1500	50	5	280	M	PU
	SP			19.8-93.06	5.5-25.85	5-29.5	700-1500	40	4	280	M	M/PU
	SP			24.3-87.12	6.75-24.2	5.5-31.5	700-1500	58	5	280	M	M/PU
	SP			24.3-114.8	6.75-31.9	5-30	700-1500	60	5	280	M	M/PU
	SPR			22.5-105	6.25-29.15	5.5-30.5	700-1500	51	5	280	RU	RU
	SP			18.9-89.1	5.25-24.75	5-28	700-1500	35	8	290	M	M/PU
100ZX	SP	75	32	56.7-221.76	15.75-61.6	4.5-34.5	500-1200	56	5	370	M	PU
	SPR			64.8-285	18-79.2	7.5-36	600-1200	62	5	370	RU	PU
	SP			54-289	15-80.3	5-35	500-1200	56	5	370	M	M/PU
	SP			54-237.6	15-66	6-30	600-1200	40	8	390	M	M/PU
150ZX	SP	110	45	108-479.2	30-133.1	8.5-40	500-1000	52	5	450	M	PU
200ZX	SP	110	65	189-891	52.5-247.5	6.5-37	400-850	64	5	520	M	M/PU
250ZX	SP	200	67	261-1089	72.5-302.5	7.5-33.5	400-750	60	5	575	M	M/PU
300ZX	SP	200	70	288-1267	80-352	6.5-33	350-700	50	5	610	M	PU

1. Capacity range: 50 ~ 110% (100% refers to the capacity at Max. efficiency).
2. Data tested with clean water.
3. PU : Polyurethane M: wear-resistant alloy RU : Rubber

Performance Curves

40ZX

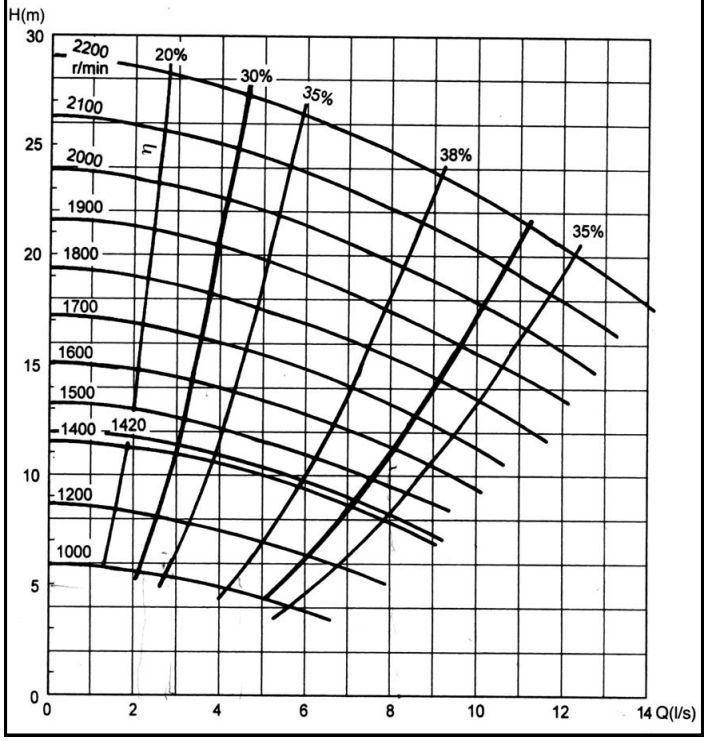

65ZX

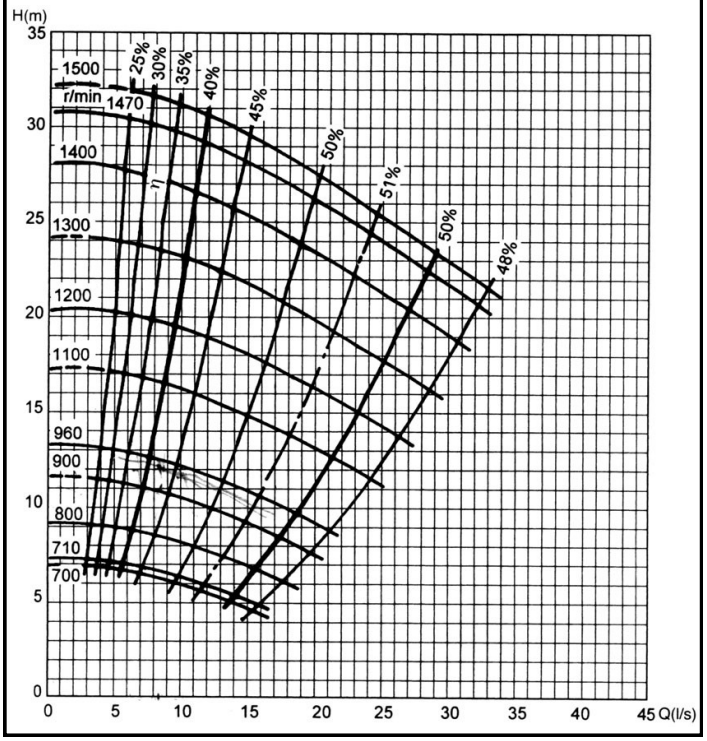

100ZX

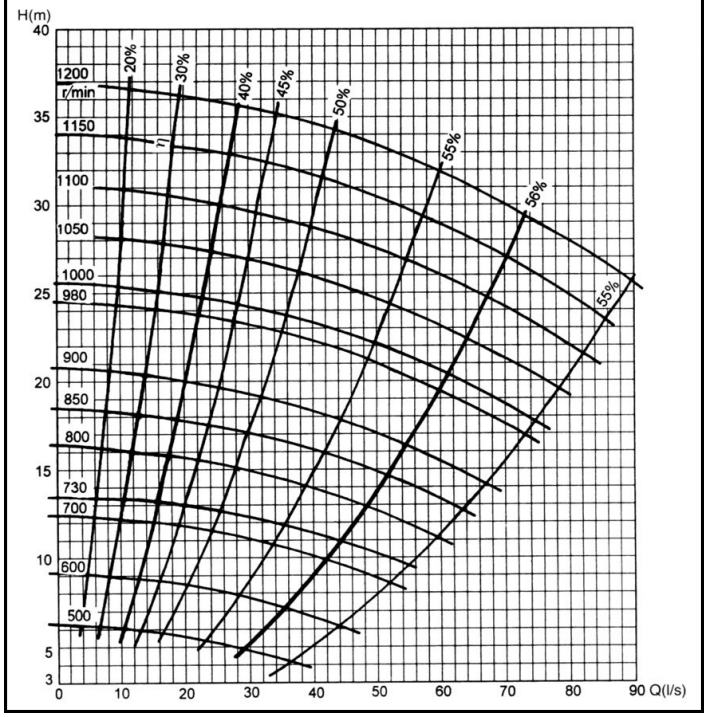

150ZX

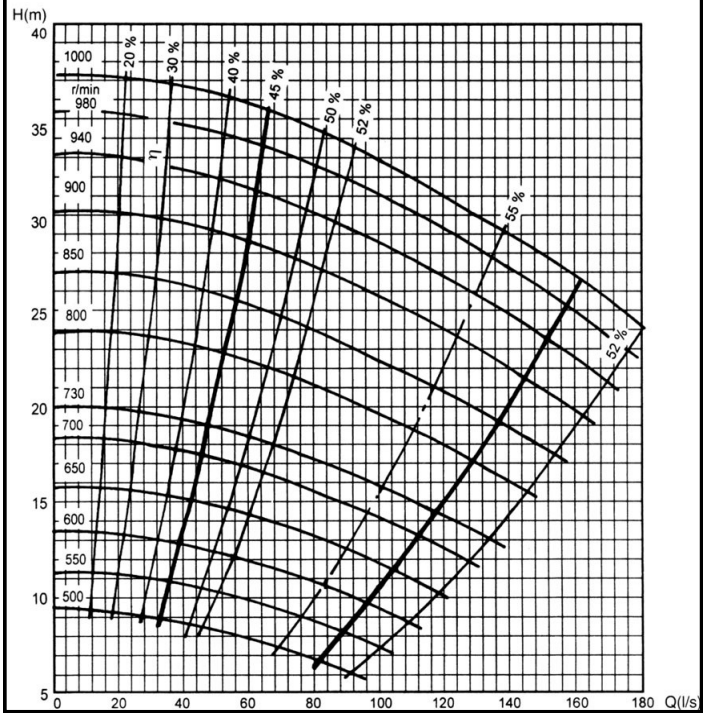

Performance Curves

200ZX

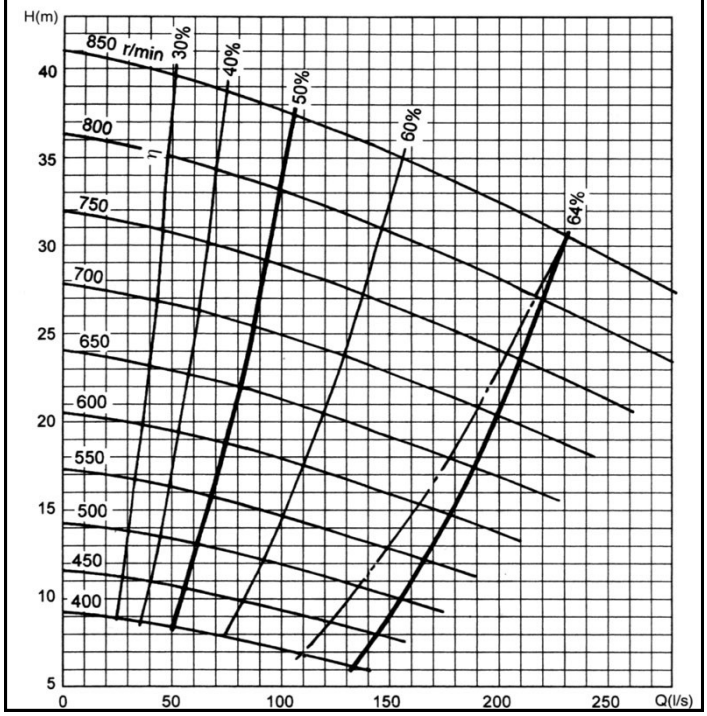

300ZX

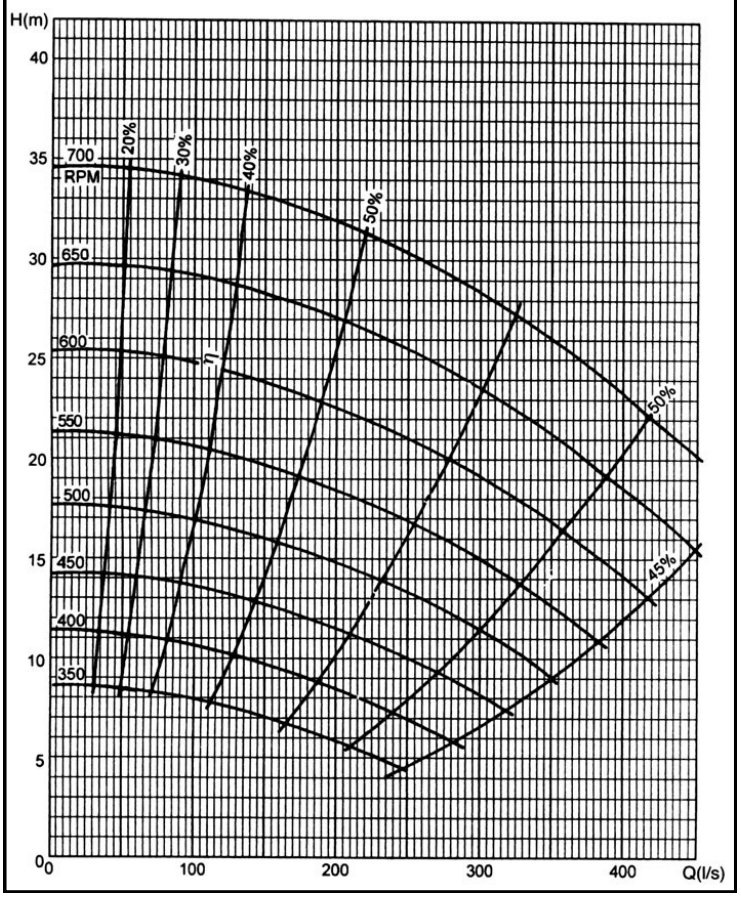

250ZX

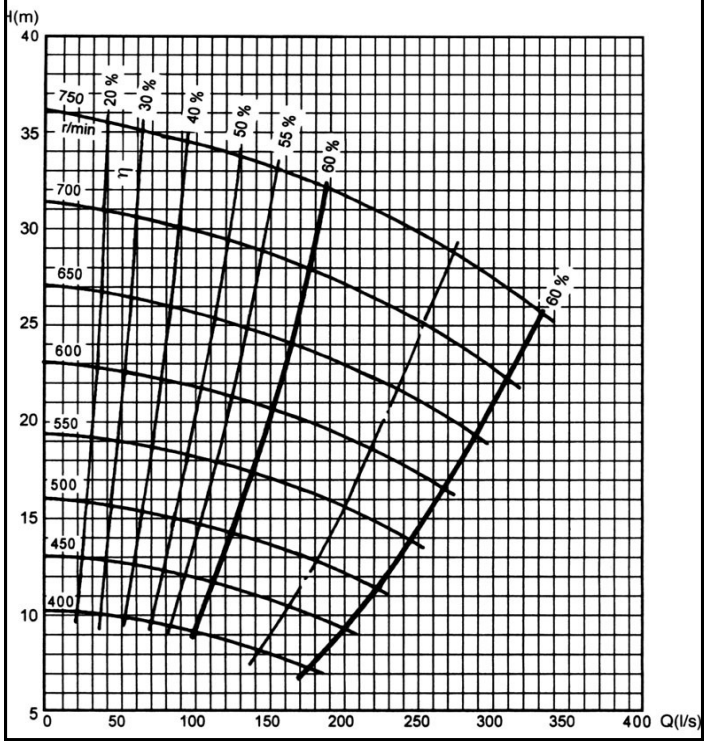

Installation Drawings

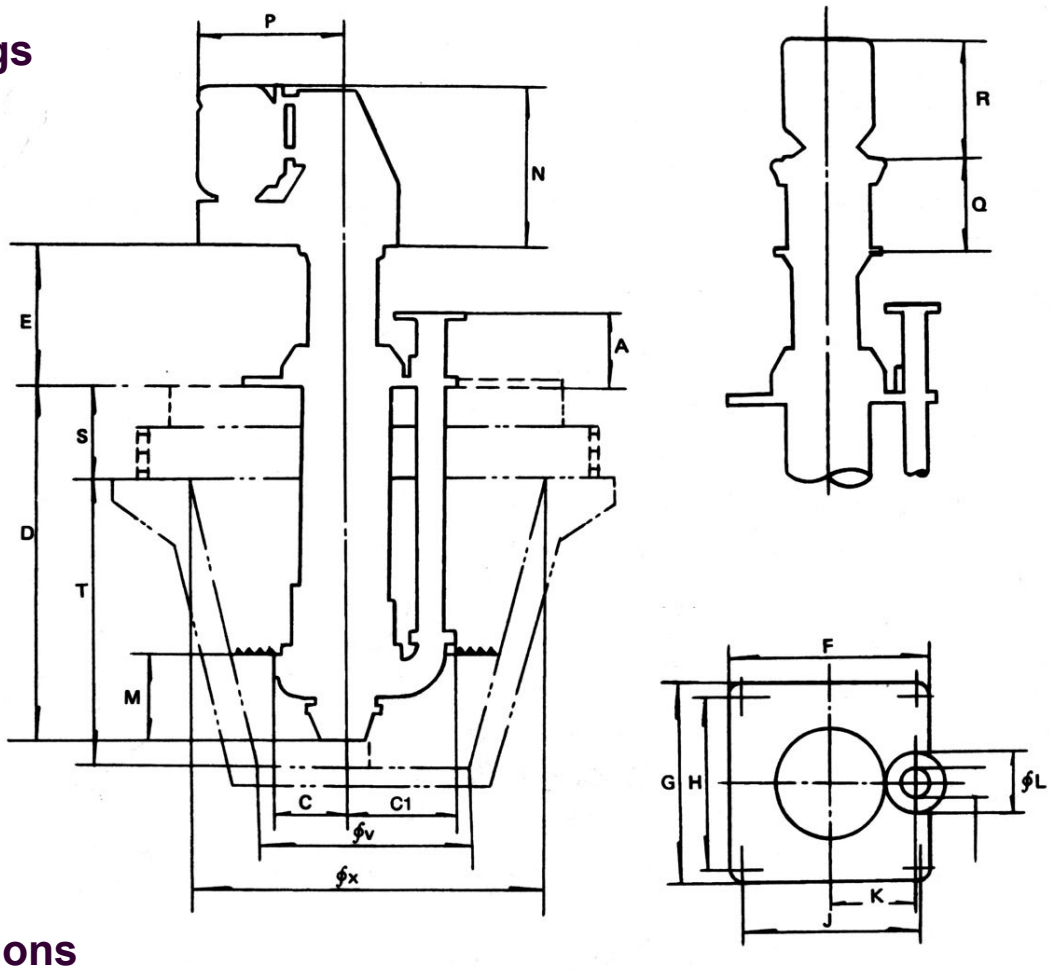

Installation Dimensions

Model	Frame	Type	A	C1	C	D	E	F	G	H	J	K	L	M
40ZX	PV	SP	137	285	153	900*, 1200,1500, 1800	380	500	500	450	450	205	127	174
		SPR	140	265	175		380							
65ZX	QV	SP	227	399	231	900,1200*,1500	492	680	680	620	620	285	178	265
		SPR	230	380	260		498							
100ZX	RV	SP	260	528	317	1200,1500*, 1800,2000,2400	662	1000	870	800	930	400	229	393
		SPR	266	535	332		668							
150ZX	SV	SP	390	670	365	1500,1800*,2100	875	1100	1100	1030	1030	500	280	475
		SPR	395	670	400		883							
200ZX	SV	SP	45	805	440		878	1300	1200	1100	1200	600	343	550
		SPR												
250ZX	TV	SP	500	930	470	1800,2100*,2400	1000	1750	1450	1350	1650	700	406	685
		SPR												
300ZX	TV	SP	500	1170	559		1000	1750	1450	1350	1650	700	483	700
		SPR	400	1090	630		1365							

Model	Motor Dimensions				WT. (kg)	Slurry Pool Dimensions				
	N	P	Q	R		S	T	V	X	Volume (m^3)
40ZX	733	675	248	629	285	280	695	550	1000	0.34
65ZX	898	794	290	681	432	350	925	800	1400	0.9
100ZX	1141	1020	416	960	867	350	1225	1000	1750	1.86
150ZX	1311	1200	476	1011	1737	350	1525	1250	2150	3.54
200ZX	1313	1300	476	1011	2400	350	1525	1500	2400	4.76
250ZX	1572	1750	561	1246	3500	400	1775	1700	2700	6.86
300ZX	1467	1750	561	1246	4200	400	1800	2000	3100	9.34

Flange Installation Drawing

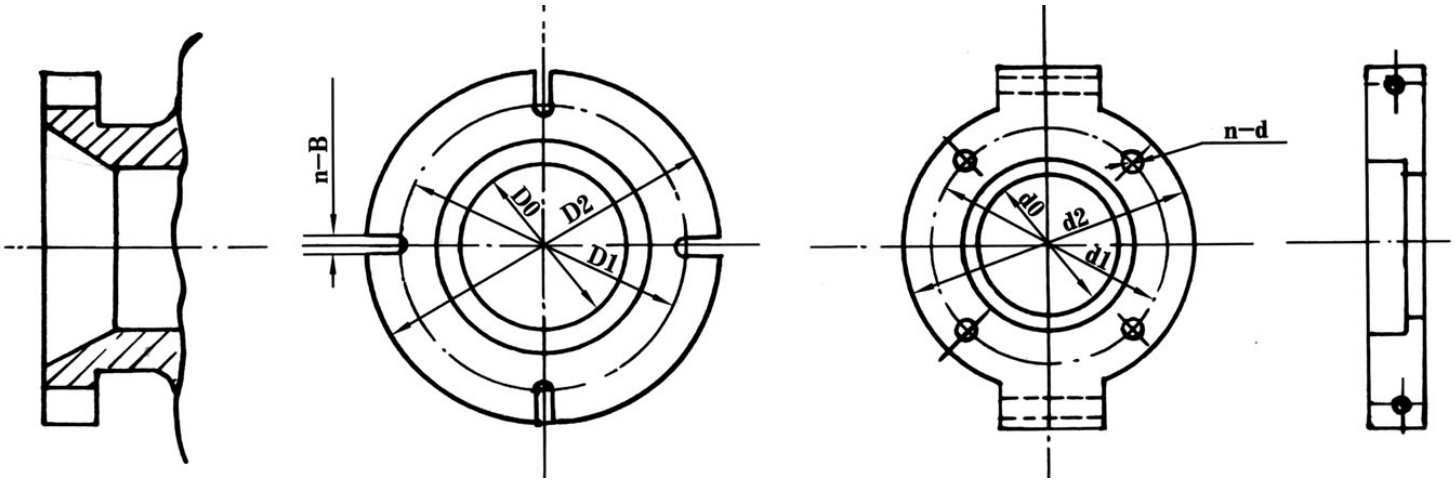

Flange Installation Dimensions

Model	Suc.Flange				Dis.Flange			
	D2	D0	D1	n-B	d2	d0	d1	n-d
40ZX	ϕ170	ϕ81	ϕ140	4-ϕ14	ϕ127	ϕ40	ϕ98	4-ϕ16
65ZX	ϕ240	ϕ104	ϕ215	4-ϕ14	ϕ178	ϕ65	ϕ140	4-ϕ19
100ZX	ϕ380	ϕ175	ϕ325	4-ϕ24	ϕ229	ϕ100	ϕ191	8-ϕ19
150ZX	ϕ460	ϕ240	ϕ400	4-ϕ28	ϕ280	ϕ150	ϕ241	8-ϕ22
200ZX	ϕ560	ϕ320	ϕ500	4-ϕ28	ϕ343	ϕ200	ϕ298	8-ϕ22
250ZX	ϕ680	ϕ400	ϕ600	4-ϕ34	ϕ406	ϕ250	ϕ362	12-ϕ25
300ZX	ϕ780	ϕ480	ϕ700	4-ϕ34	ϕ483	ϕ300	ϕ432	12-ϕ25

Tel: (+8610)51906628
Fax:(+8610)88580150
E-mail : export@v-flo.com