GOOD PRACTICE GUIDE

PLGA MICROPARTICLE PRODUCTION STATION

The following document presents all the basic steps to follow to start and stop your experiments cleanly with the RayDrop.

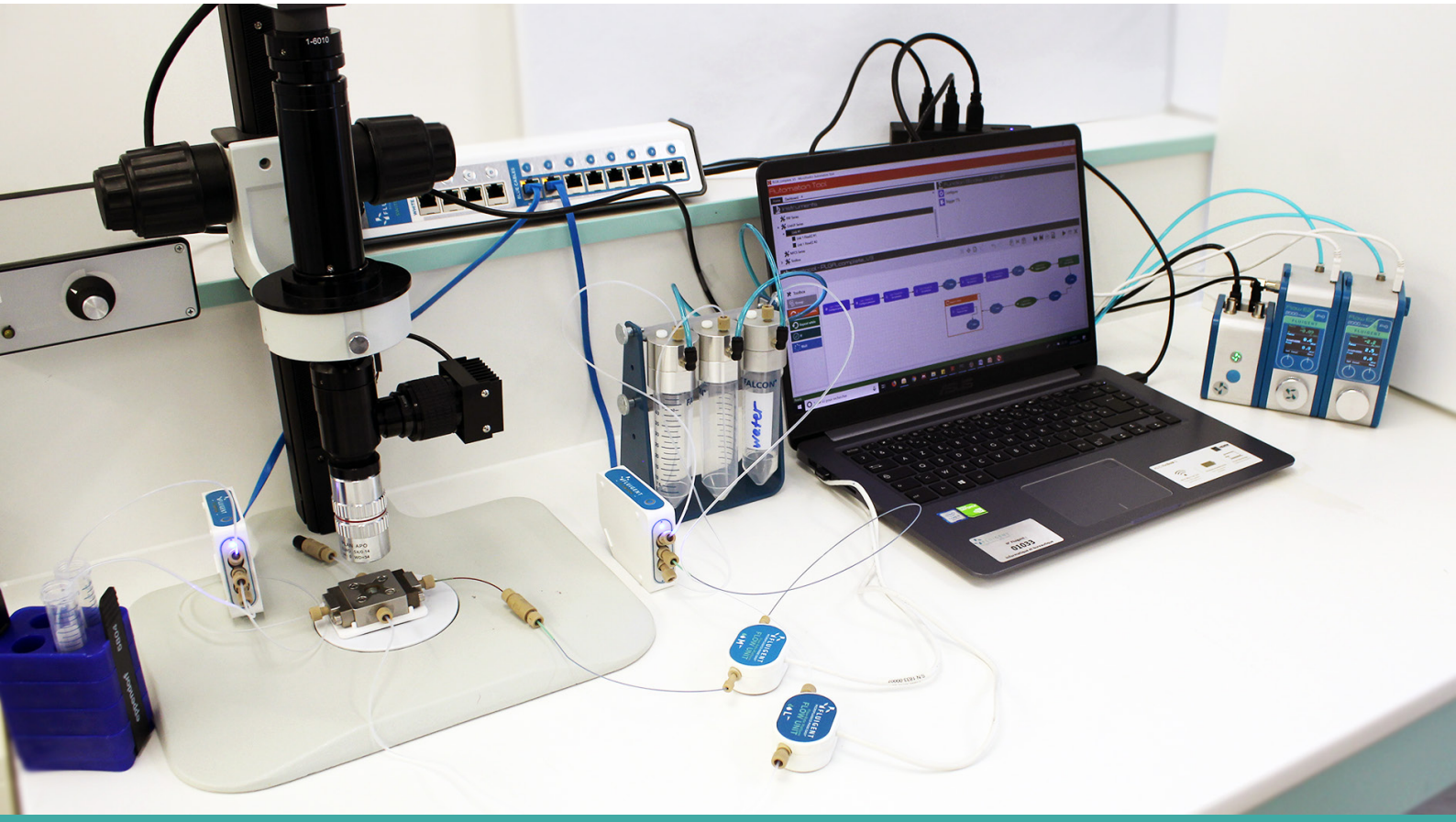

CONTENTS

- Starting an Experiment
- PLGA Microparticle Production
- Stopping your Experiment
- Possible Issues
- Complete Cleaning of the RayDrop

STARTING AN EXPERIMENT

As a reminder, the different inlets and outlets are shown on the following scheme:

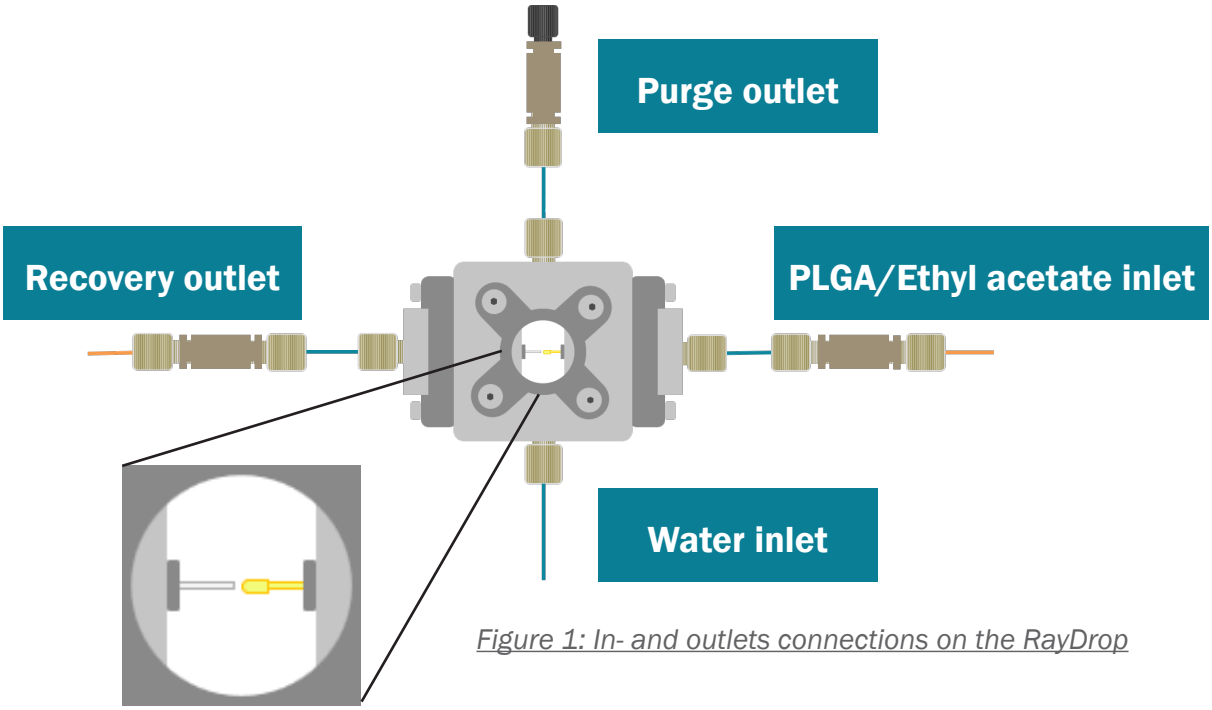

Figure 1: In- and outlets connections on the RayDrop

1 Assemble the entire set-up as shown below depending on which pack you use (the use of filtered solution is highly recommended).

PLGA microparticle production station, Standard Pack

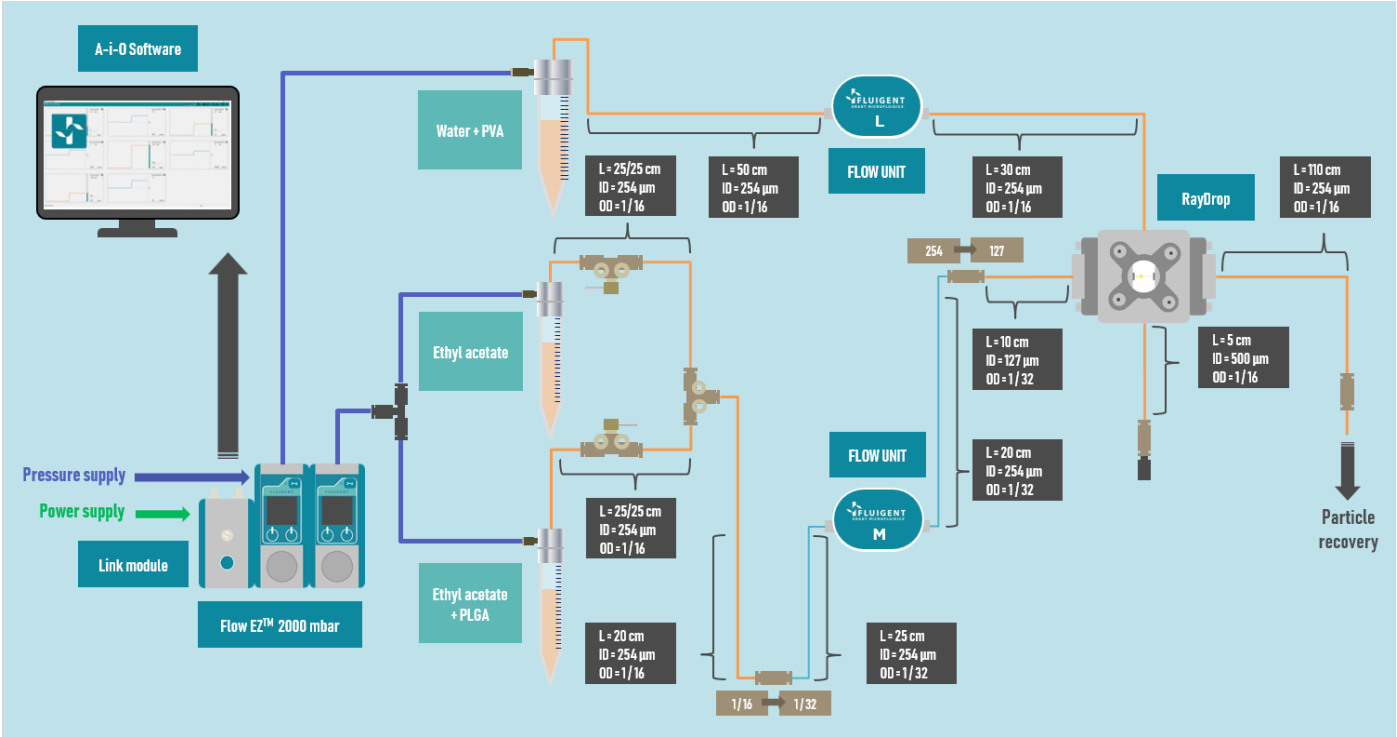

Figure 2: Set-up of PLGA microparticle production station standard pack

PLGA microparticle production station, Automation/Full Pack

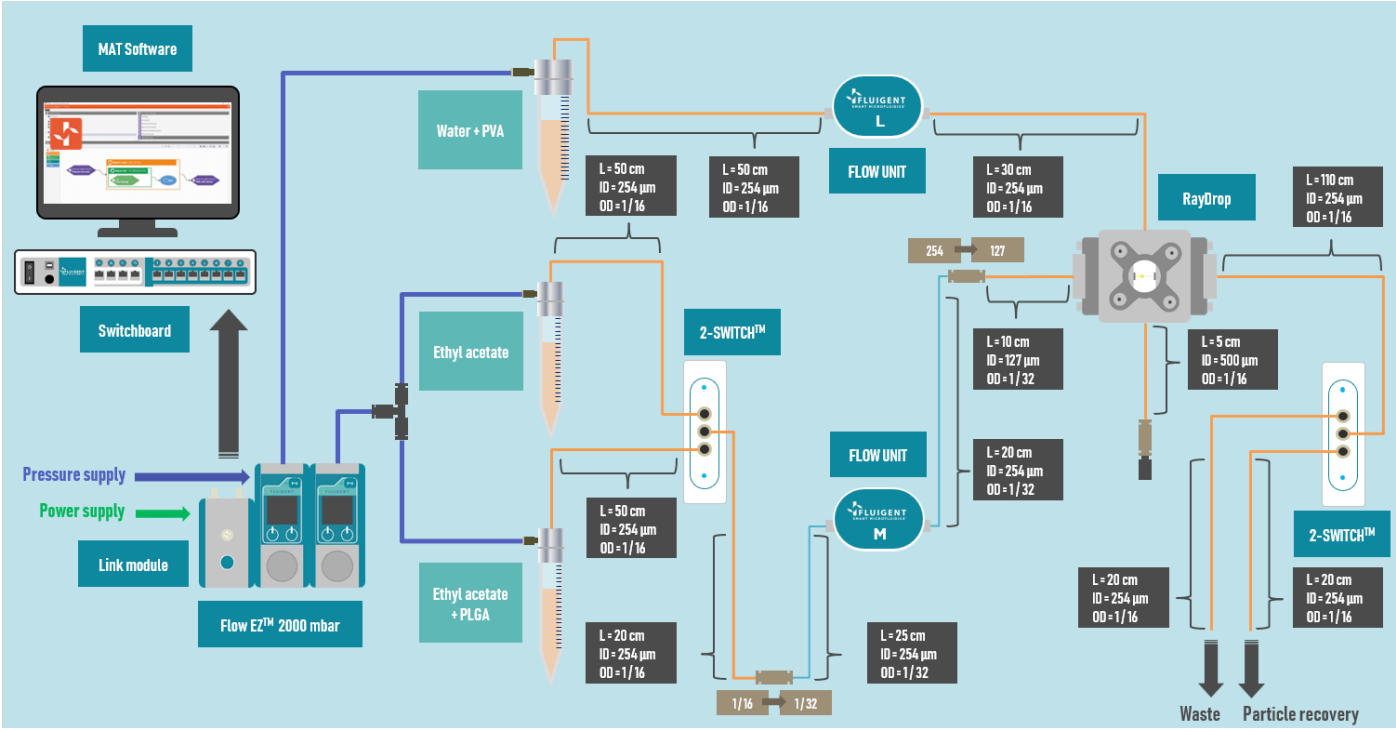

Figure 3: Set-up of PLGA microparticle production station automation or full pack

2 Disconnect all channels except the water inlet. Set a pressure of approximatively 1 bar on the water inlet to start filling the RayDrop chamber.

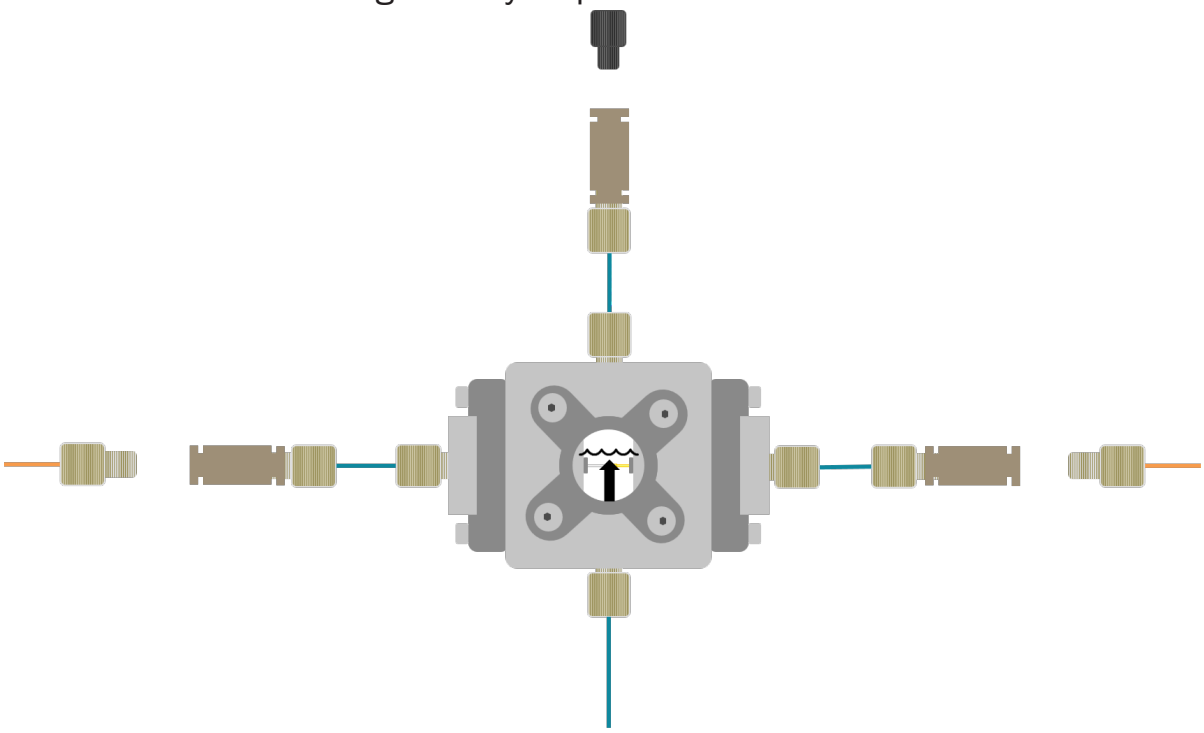

Figure 4: Filling the RayDrop with continuous phase

3 Hold the RayDrop vertically to evacuate the air through the purge outlet.

4 When water is coming out of the purge outlet, use a plug to close the purge outlet. Water will flow out of the other in-outlets.

(Tip: you can use a second plug to close the recovery outlet to facilitate the flushing of the ethyl acetate inlet.)

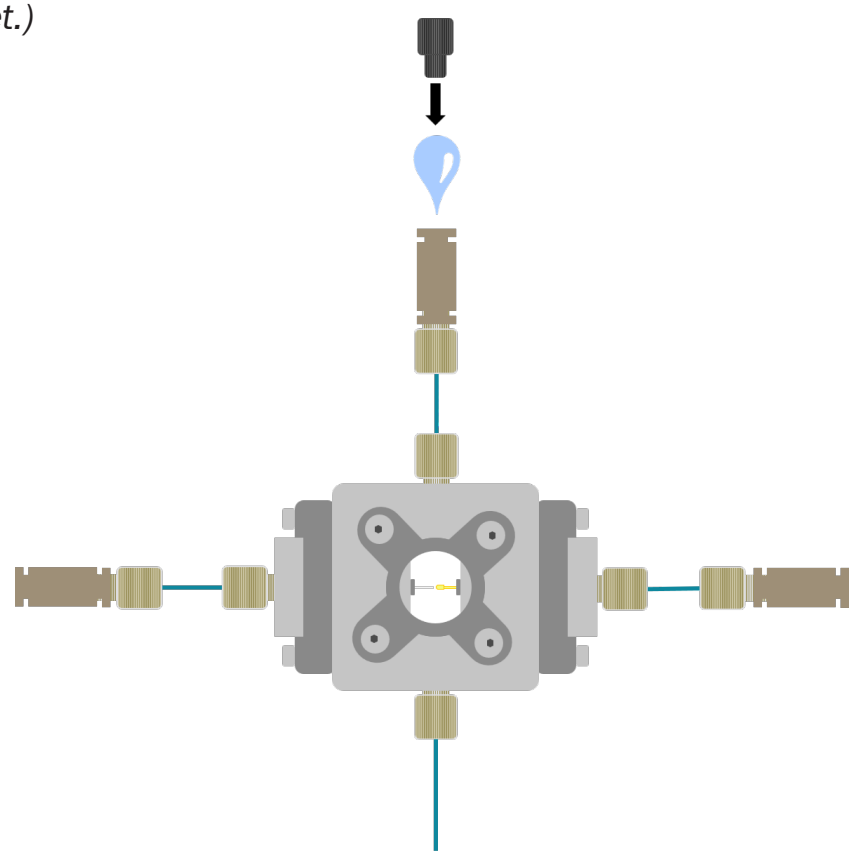

Figure 5: Unplugging the purge outlet

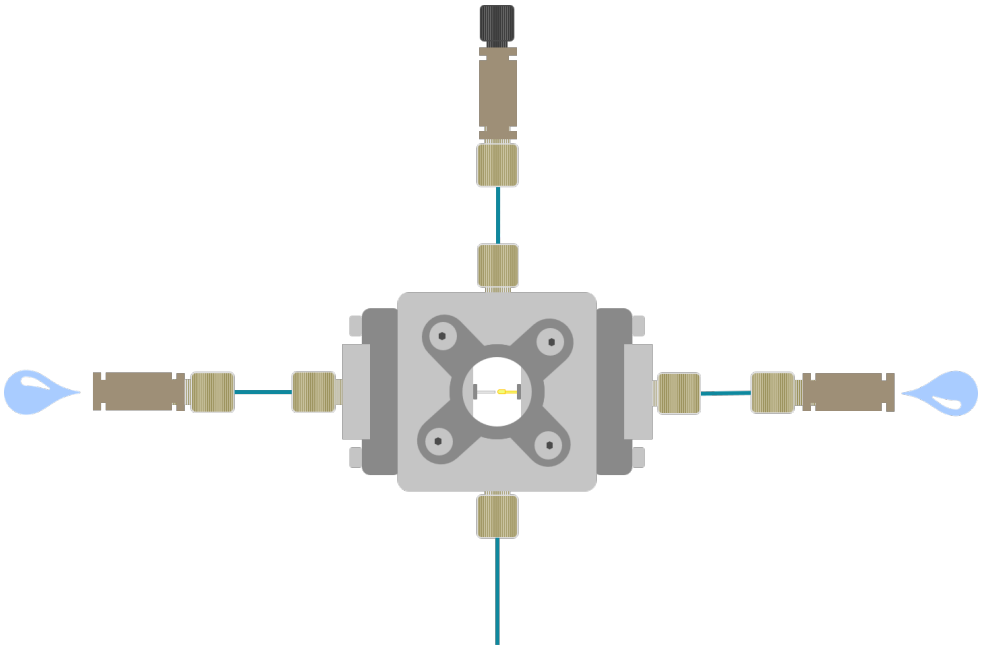

Figure 6: Flushing dispersed phase inlet and recovery outlet

At this point, the RayDrop is ready to start the PLGA microparticle production

PLGA MICROPARTICLE PRODUCTION

With a filled RayDrop, follow the next steps to produce PLGA microparticles

5 Set the water pressure to 900 mbar. Start applying pressure (~100 mbar) on the ethyl acetate inlet. Pure ethyl acetate should flow into the PLGA/Ethyl acetate inlet which is still disconnected from the RayDrop.

PLGA microparticle production station, Standard Pack

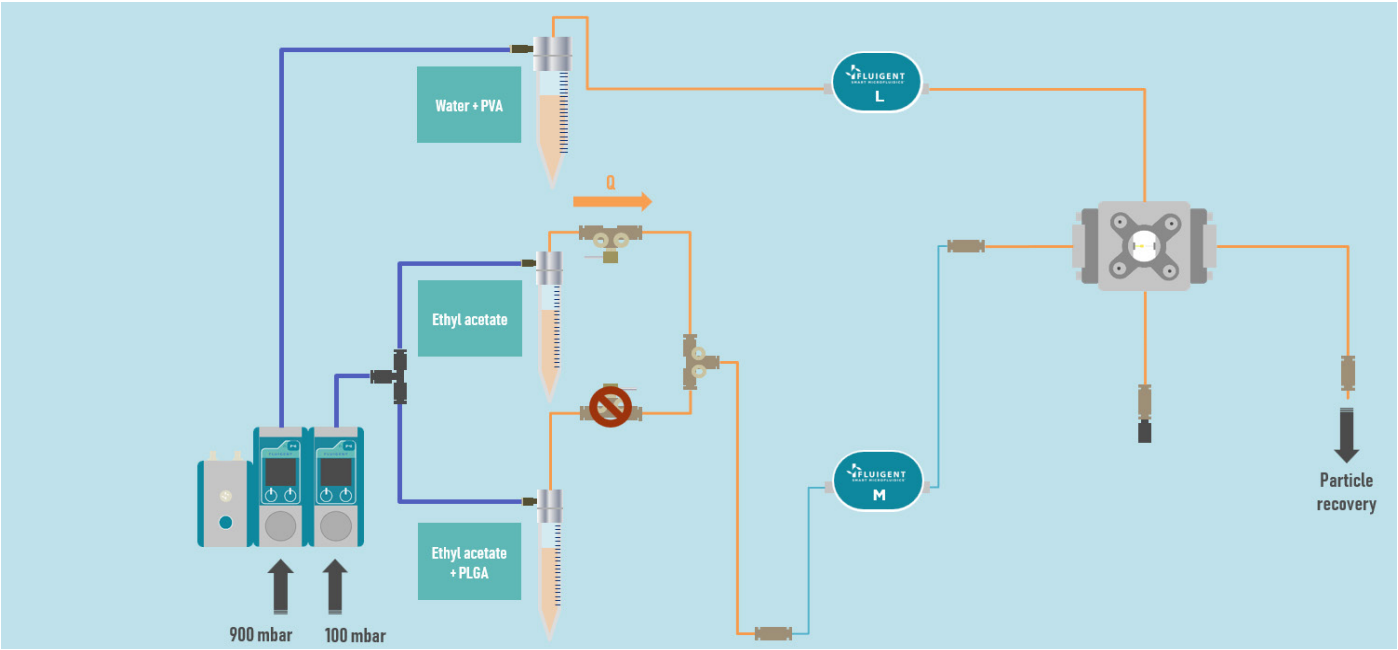

Figure 7: Standard pack, manual valve on ethyl acetate + PLGA OFF, manual valve on ethyl acetate ON

PLGA microparticle production station, Automation/Full Pack

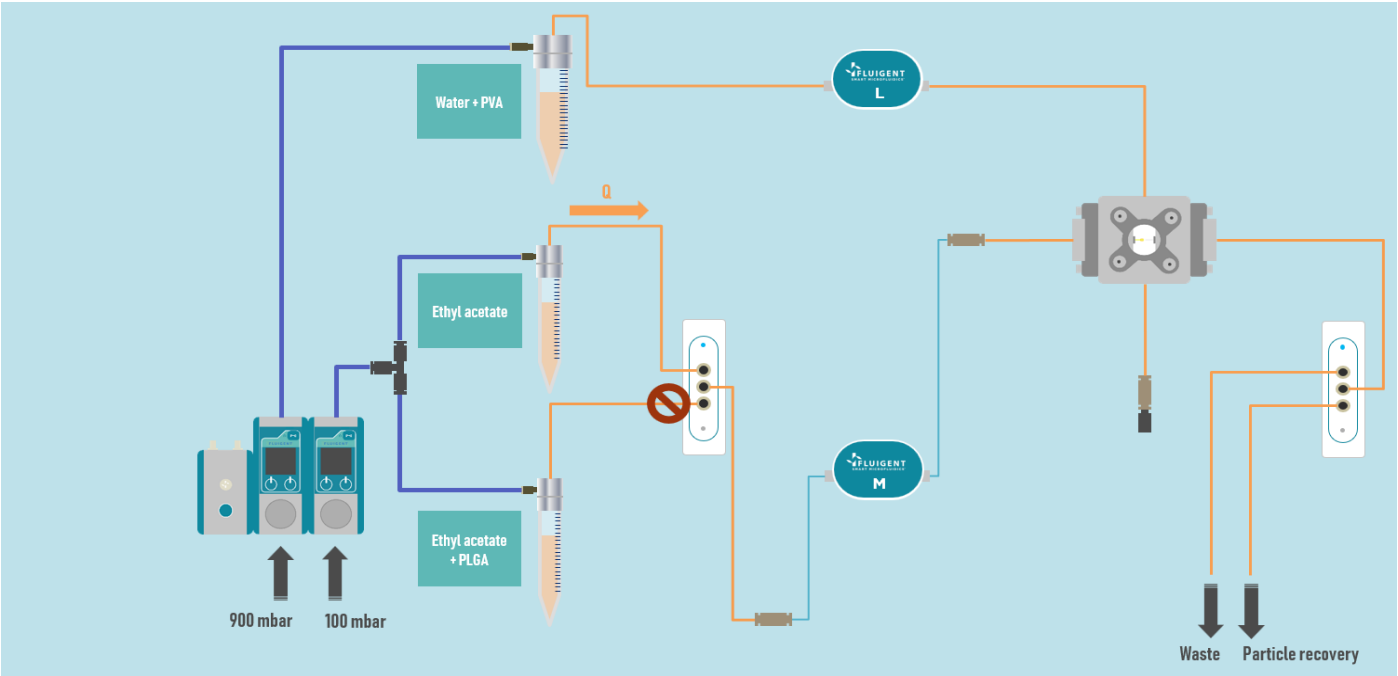

Figure 8: Automation/Full pack, 2-SWITCH™ redirecting pure ethyl acetate

6 Once ethyl acetate is coming out of the tubing at the end of the FLOW UNIT M, connect it to the ethyl acetate inlet.

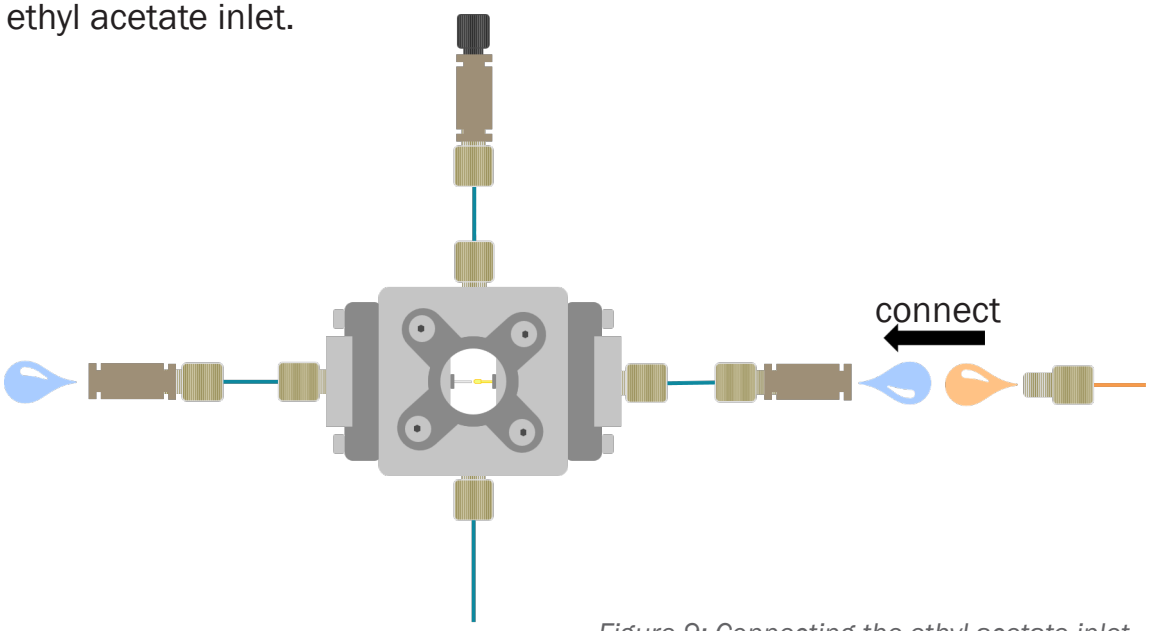

Figure 9: Connecting the ethyl acetate inlet

At this point, a backflow may occur in the ethyl acetate channel. This is expected.

7 Set the pressure to the following values:

- Water + PVA: 900 mbar
- Ethyl acetate: 600 mbar

You should obtain a jetting regime quite quickly as shown in Figure 10.

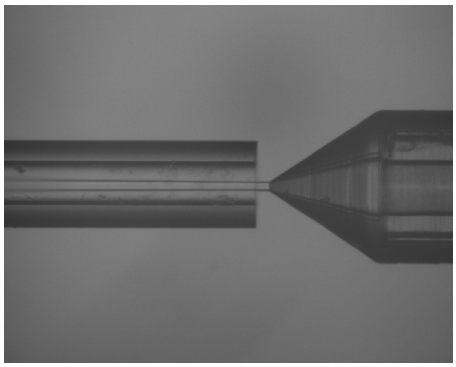

Figure 10: Jetting regime

8 Decrease both pressure slowly and simultaneously (around 10 mbar at a time) until you reach the droplet regime. The following pressure values generally lead to a good generating regime.

- Water + PVA: 600 mbar
- Ethyl acetate: 400 mbar

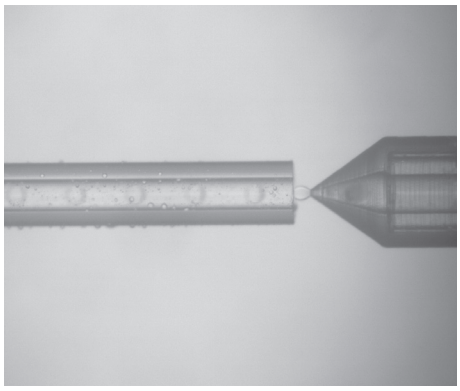

Figure 11: Droplet generation regime

9 Switch the 2-SWITCH™ or the manual valves to the ethyl acetate + PLGA reservoir.

PLGA microparticle production station, Standard Pack

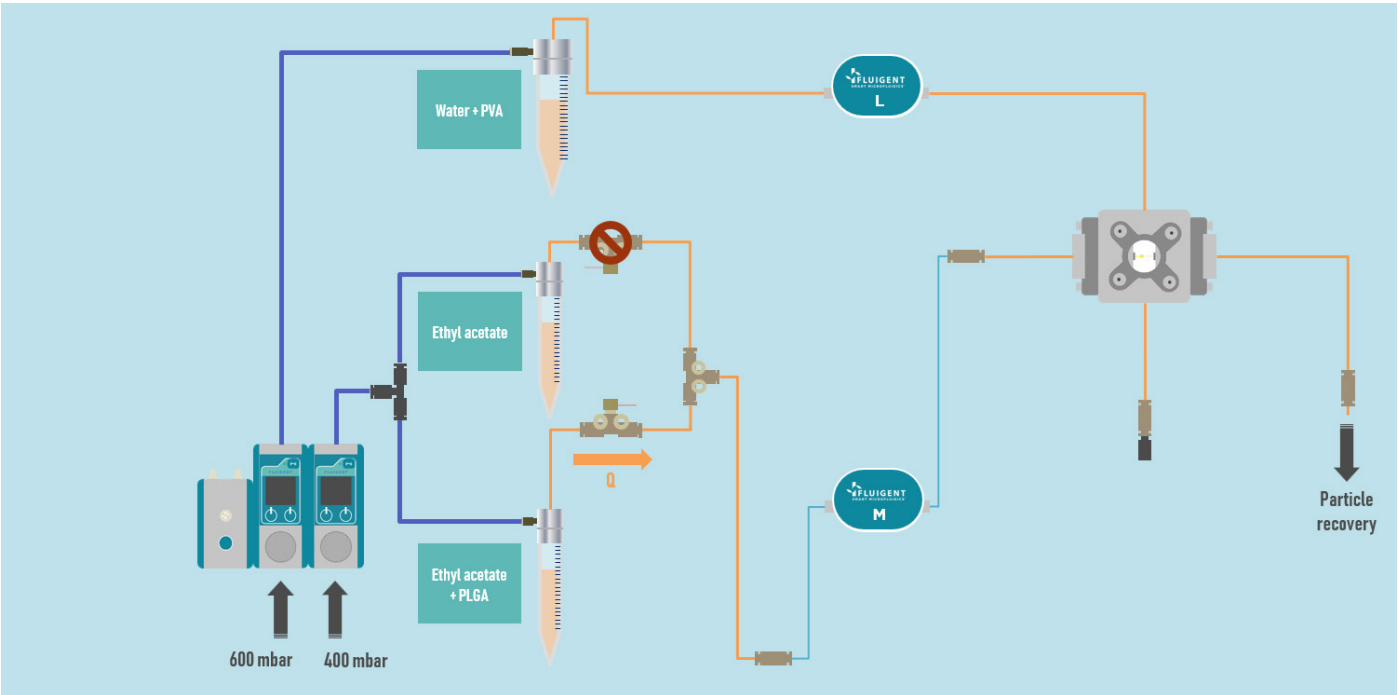

Figure 12: Standard pack, manual valve on ethyl acetate + PLGA ON, manual valve on ethyl acetate OFF

PLGA microparticle production station, Automation/Full Pack

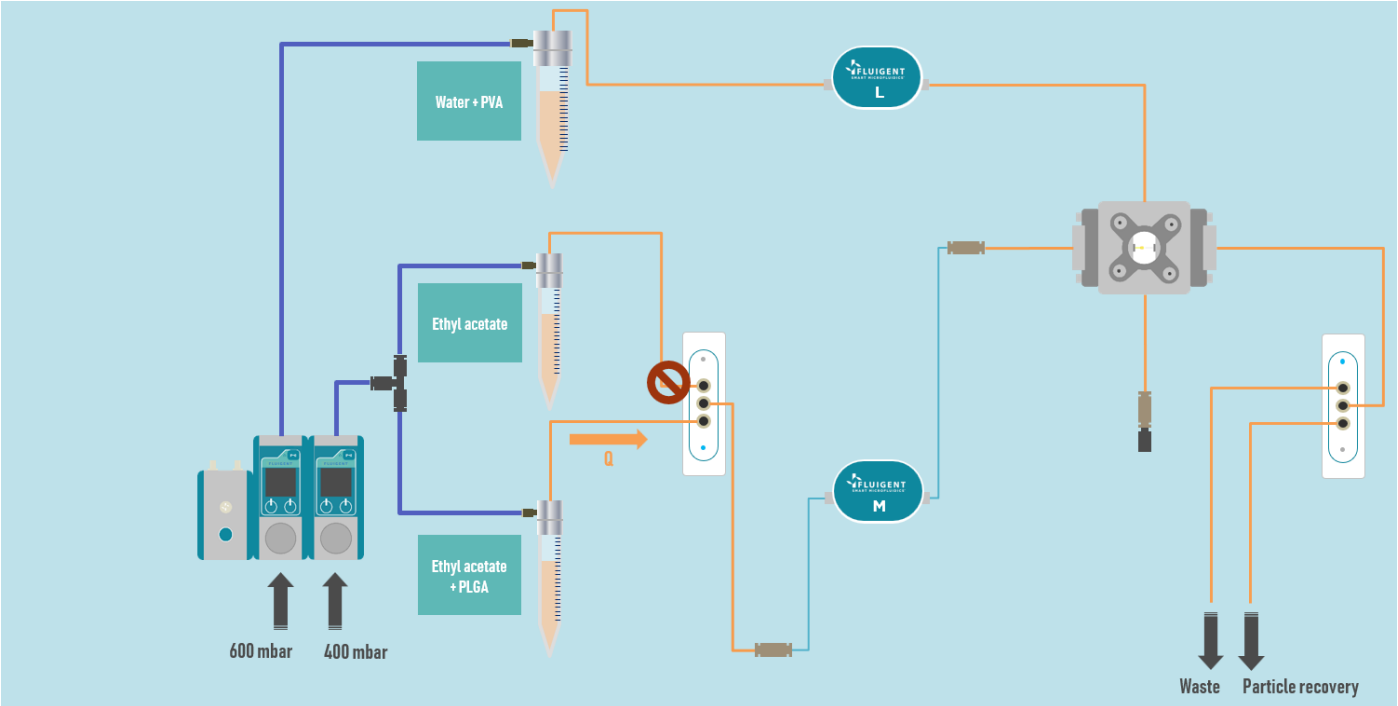

Figure 13: Automation/Full pack, 2-SWITCH™ redirecting PLGA + ethyl acetate

9 After about a minute, switch the second 2-SWITCH™ to your recovery reservoir to recover the PLGA microparticles (with an automation/full pack including the 2-SWITCH™)

STOPPING YOUR EXPERIMENT

The following steps should be performed **after each experiment** in order to prevent any clogging of the RayDrop.

Perform the following steps to stop your experiment.

1 Switch the 2-SWITCH™ or manual valves to the pure ethyl acetate reservoir for at least a minute.

2 Lower the pressure on the ethyl acetate until you reach 0 mbar.

3 Disconnect the PLGA/Ethyl acetate inlet.

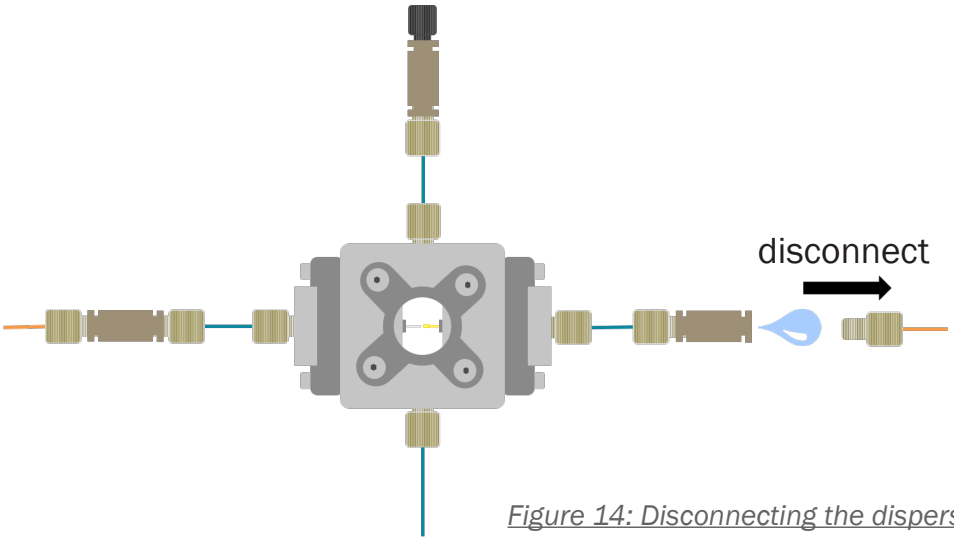

Figure 14: Disconnecting the dispersed phase inlet

4 Keep some pressure on the water inlet and flush for about a minute.

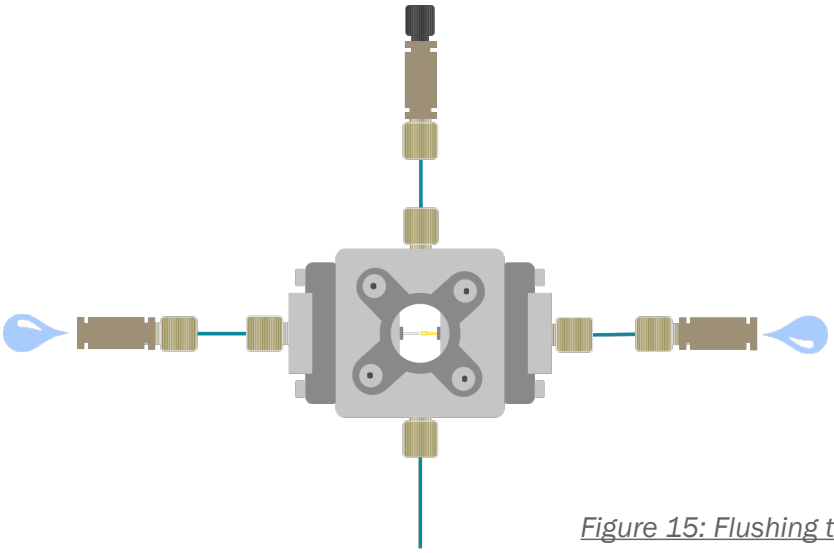

Figure 15: Flushing the RayDrop

5 Close all outlets with plugs until the next experiment.

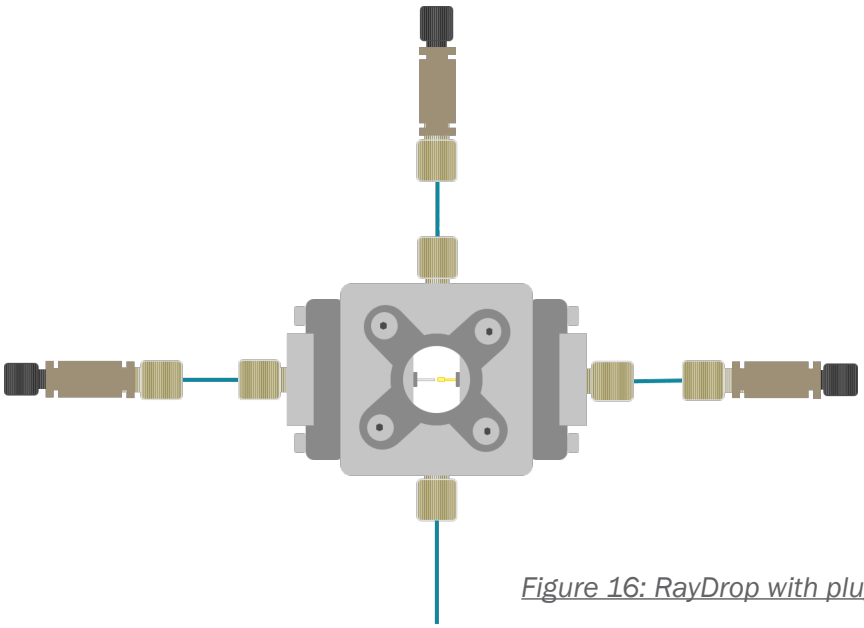

Figure 16: RayDrop with plugged in-outlets

(Note: it is not mandatory to empty the RayDrop between each experiments. Nevertheless we recommend emptying completely if it is unused for long periods (generally after 3 days)

POSSIBLE ISSUES

Some of the ethyl acetate has flown into the continuous phase chamber or has aggregated on the outside of the nozzle

If some pure ethyl acetate (without PLGA) flows into the chamber you can continue your experiment if it is only a small quantity that does not affect your experiment. With time it will dissolve into the water and disappear.

If there is a larger quantity, perform the following steps:

1 Stop the flow of ethyl acetate.

2 Disconnect the PLGA/Ethyl acetate inlet.

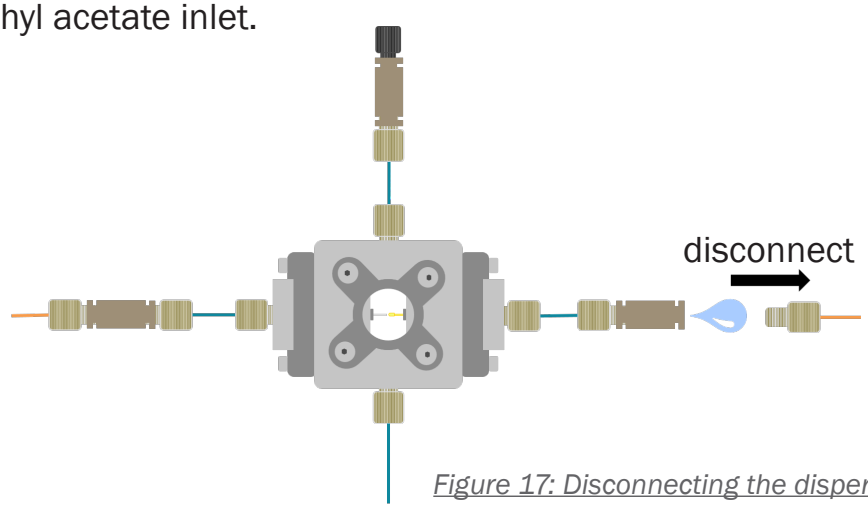

Figure 17: Disconnecting the dispersed phase inlet

3 Open the top plug.

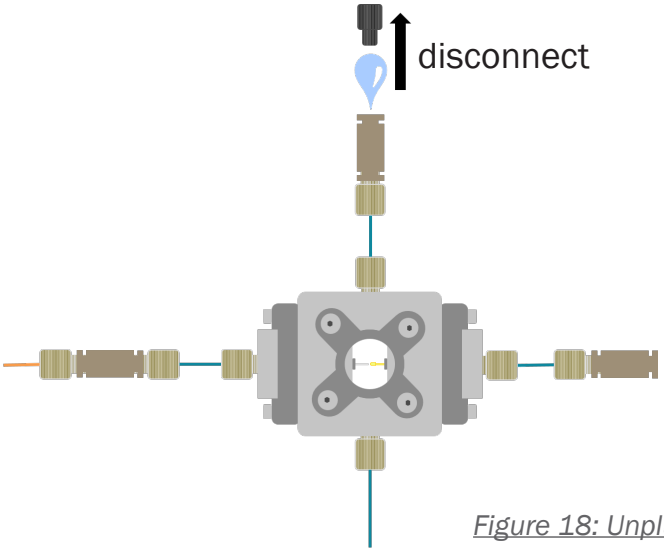

Figure 18: Unplugging the purge outlet

4 Flush with the water + PVA solution approximately for a minute or until you see all the ethyl acetate has disappeared.

5 Restart your experiment as described previously in the «Starting an experiment» section.

(Note: The same procedure can be used if some ethyl acetate is fixed on the outside of the nozzle.)

Some PLGA solution has flowed into the chamber or is fixed on the outside of the nozzle

If some PLGA solution has flowed into the chamber perform the following steps quickly:

1 Switch back your 2-SWITCH™ or manual valves to the ethyl acetate solution and let flow for 30 seconds.

2 Disconnect the PLGA/Ethyl acetate inlet.

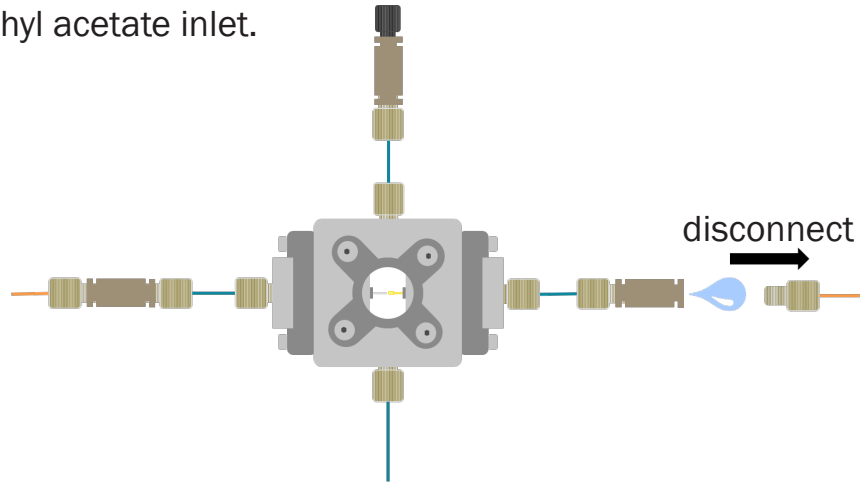

Figure 19: Disconnectng the dispersed phase inlet

3 Open the top plug.

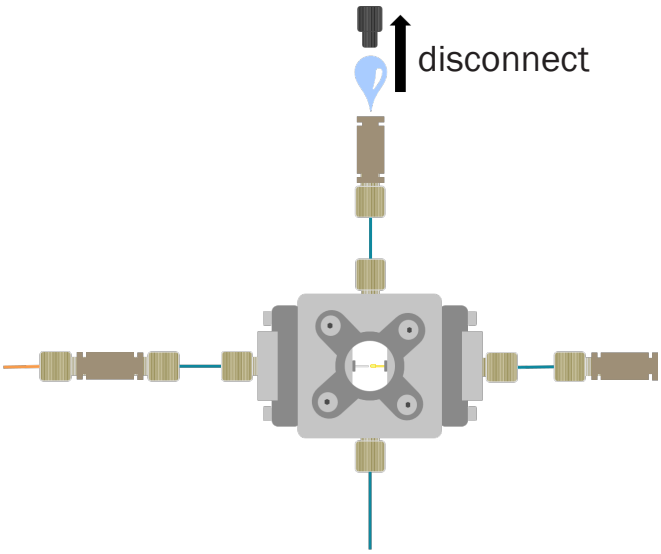

Figure 20: Unplugging the purge outlet

4 Flush with the water + PVA solution approximately for a minute or until you see all the ethyl acetate has disappeared.

Some PLGA has polymerized into the chamber

If the PLGA polymerized in the chamber you can try to eliminate it by dissolving it in ethyl acetate. For that try the following steps :

1 Switch the 2-SWITCH™ or manual valves back to the pure ethyl acetate solution.

2 Disconnect all the inlets (PLGA/Ethyl acetate and water inlets).

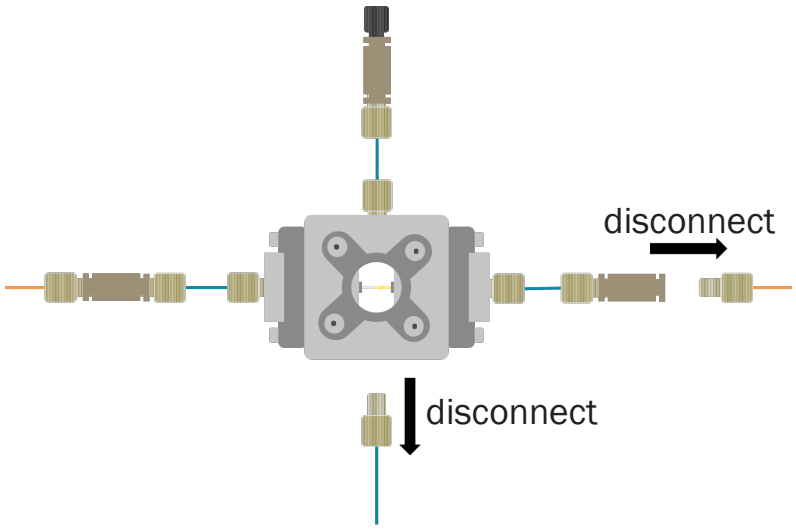

Figure 21: Disconnecting the dispersed phase inlet and continuous phase inlet

3 Connect the PLGA/Ethyl acetate inlet to the bottom inlet (normally used for the water).

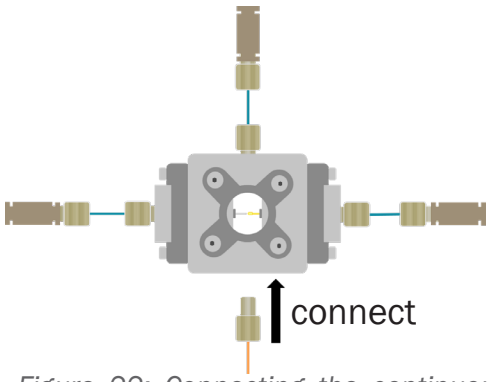

Figure 22: Connecting the continuous phase inlet and water inlet

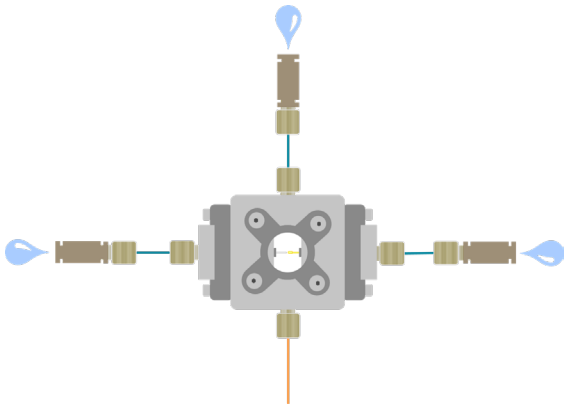

Figure 23: Flushing the RayDrop

4 Fill the chamber with the ethyl acetate.

5 Once the chamber is filled, wait for 30 minutes.

6 Empty the chamber.

7 If the PLGA has not disappeared, flush the chamber with ethyl acetate for several minutes.

(Note: if this procedure is still not working, you can try to do a complete washing of the RayDrop using the procedure described in the next section.)

COMPLETE CLEANING OF THE RAYDROP

In some cases, the previous procedures might not be enough.

Please be very careful when performing the following cleaning procedures as the RayDrop nozzle and capillary are extremely fragile.

Cavity Emptying

1 Hold the RayDrop vertically, with the closed purge outlet to the top.

2 Loosen the inlet of the continuous phase (the water inlet).

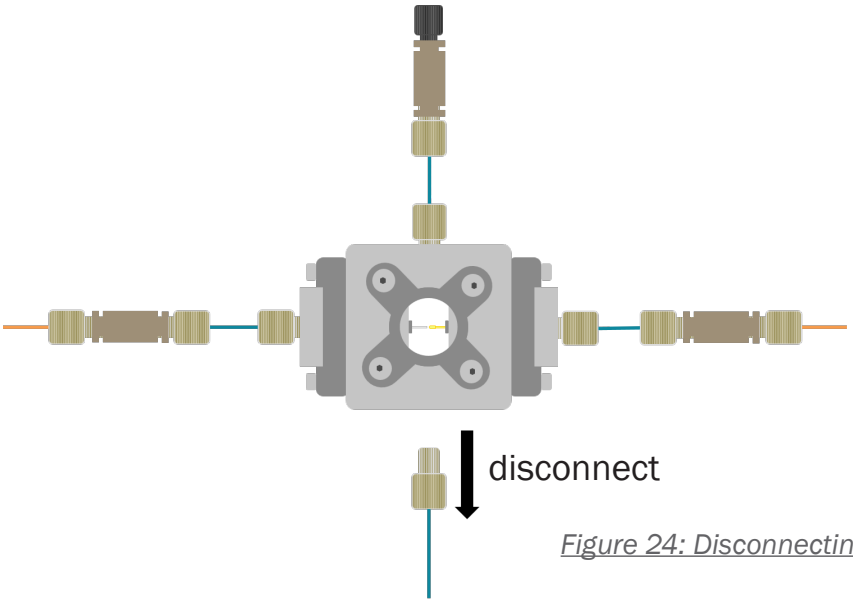

Figure 24: Disconnecting the continuous phase inlet

3 Open the purge outlet at the top. The continuous phase should flow out of the bottom outlet (the water inlet).

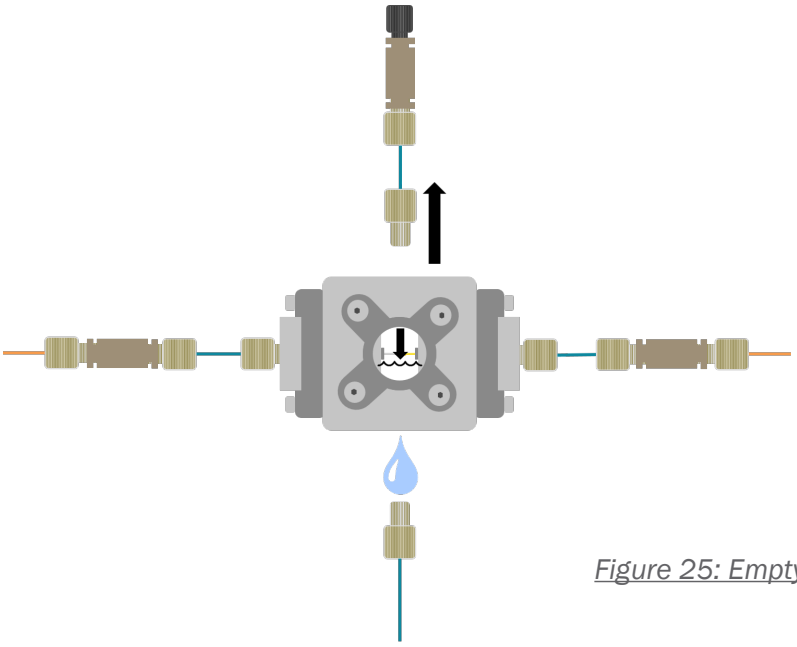

Figure 25: Emptying the RayDrop

Soft cleaning

This operation has to be performed if a dust, a particle, or a small amount of the dispersed phase has been accidentally introduced in the cavity and jeopardizes the droplet generation process, or its visualization.

Two cases are considered below:

Case 1: The contaminant is located on a glass window.
Case 2: The contaminant is located on the nozzle or glass capillary.

It is recommended to NOT disconnect the RayDrop from the fluidic circuit during these operations.

Case 1: contaminant on a glass window

1 Empty the cavity following the instructions above. A total emptying is not necessary. Just remove enough liquid to avoid leakage when the window will be opened.

2 Place the RayDrop on a hard and stable surface with the glass window to be cleaned on the top.

3 Unscrew the four screws on the X-shaped cover using an Allen key. Use tweezers or forceps to remove the metallic X-shaped cover.

(Tips: the glass window and O-ring can stick to the X-shaped cover. In this case separate them carefully using a tweezera holding the glass window)

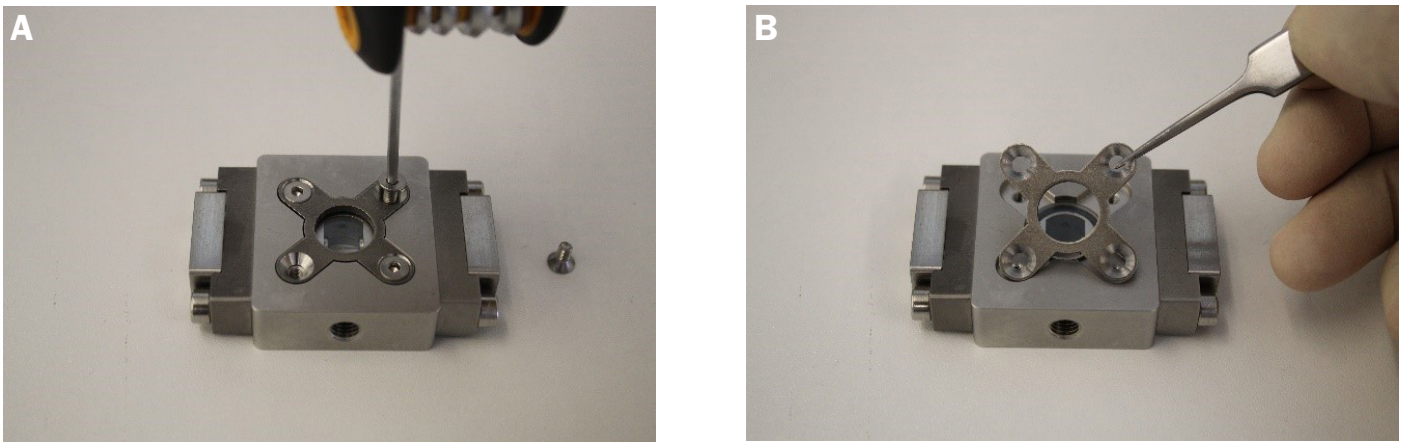

Figure 26: Dismantling the RayDrop A) Removing the screws B) Removing the X-shaped metallic

4 Use the tweezera to remove the glass window and O-ring.

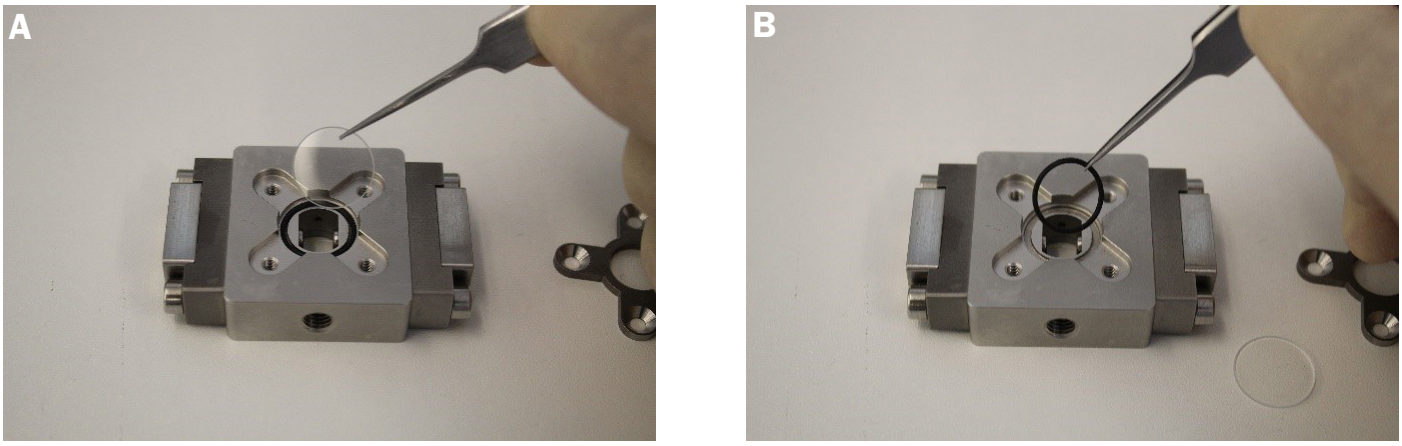

Figure 27: Dismantling the RayDrop A) Removing the glass window B) Removing the O-ring

5 Wash the glass window, O-ring and X-shaped cover using glassware detergent or isopropanol and dry it carefully. The best results are obtained using glassware detergent and an ultrasonic bath (1 minute). The parts need to be carefully rinsed with water before drying.

6 Install in order the O-ring, glass window and X-shaped cover on the RayDrop body using tweezera.

7 Using the Allen key number 3, tighten the four screws by alternatively giving a screw turn on each in a star shaped pattern.

Case 2: contaminant on the nozzle and/or the capillaries

1 Completely empty the cavity following the instructions above.

2 Inspect carefully where the contaminant is located: if it is swept away by the continuous phase when emptying the cavity, the following steps are not necessary.

3 Place the RayDrop on a hard and stable surface.

4 Completely remove the 4 screws using an Allen key. Use tweezera to remove the metallic X-shaped part.

5 Use tweezera to remove the glass window and O-ring.

6 Using the syringe filled with continuous phase, clear out the contaminant by gently flushing it away.

7 Drain the cavity again to remove the continuous phase added by the rinse as well as the contaminant.

8 Install in order the O-ring, glass window an X-shaped cover on the RayDrop body using the tweezera.

9 Using the Allen key, evenly tighten the four screws by alternatively giving a screw turn on each. See previous wording

(Caution: the glass window and o-ring can stick to the X-shaped piece. In this case the three parts are removed together so be careful when handling.)

COMPLETELY CLOGGED NOZZLE OR CAPILLARY

In case of a completely clogged nozzle or capillary, contact customer support for help.