D1C/D1A系列三相异步电动机

D1C/D1A series 3-phase induction motor

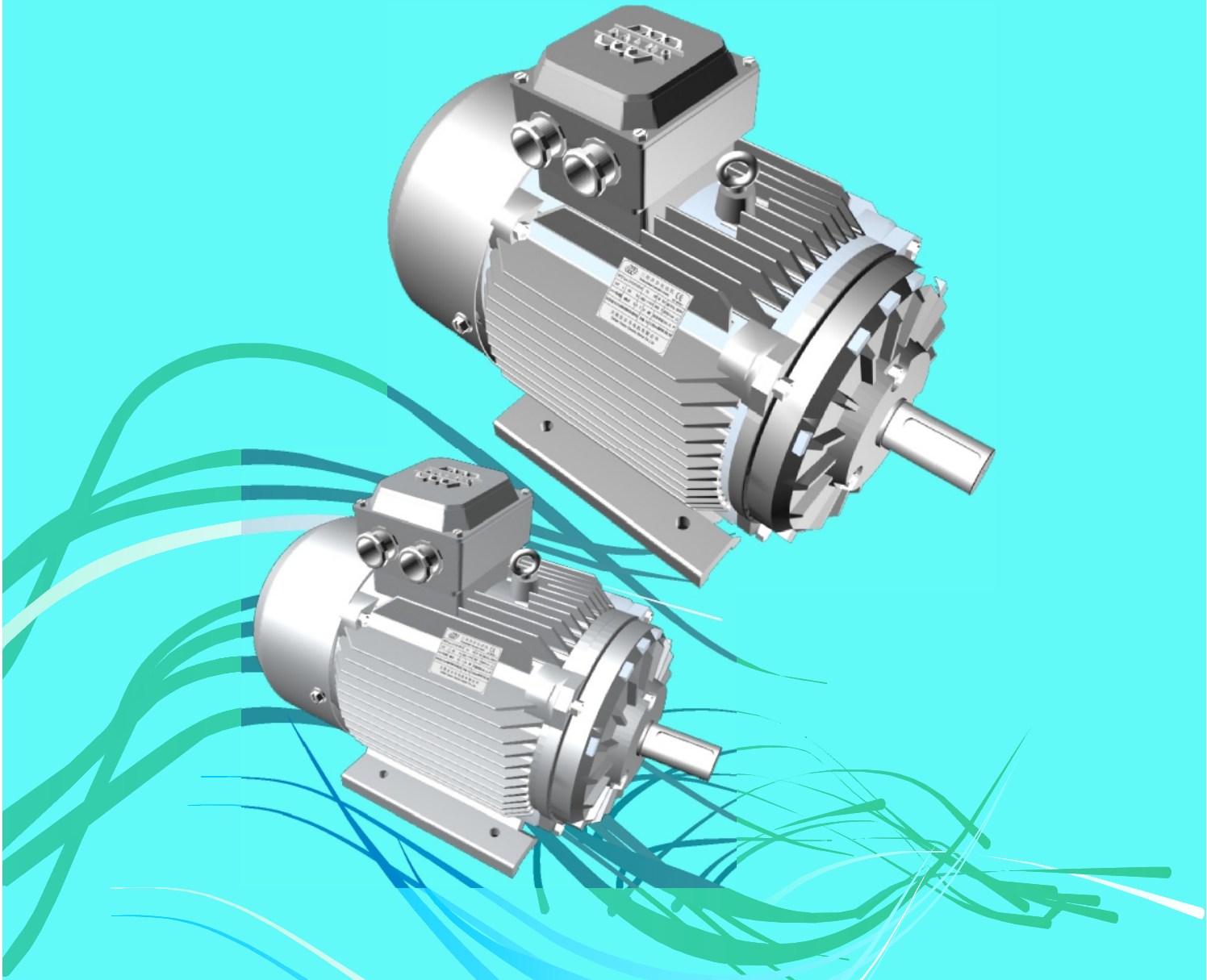

大连达尔马电机有限公司

Dalian Dalmo Electric Motor Co.,Ltd.

目录
Index

达尔马系列电机

Dalmo series electric motor

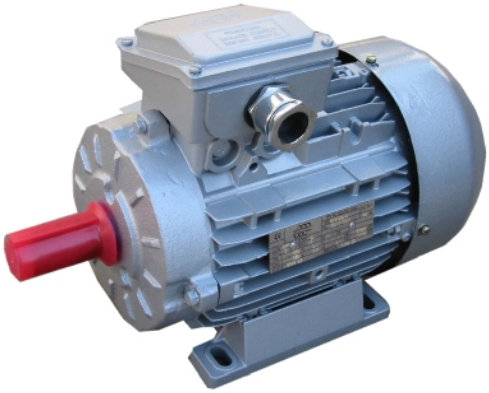

DALMO

DALMO

产品概述

DALMO系列电机是以在最严酷条件下的使用为目标，比如：采矿、石油化工、海上作业或热带环境。电动机取材上乘，工艺考究。在保养适当的情况下，电动机的寿命可达十五年，甚至更长，即使在最恶劣的条件下也是如此。具有高效，节能，低噪音，运行稳定可靠

Product remarks

DALMO motor is designed and manufactured to meet the most arduous service conditions, such as mining, petrochemical, marine or tropical environment. The motor is made from high quality materials and workmanship. With proper maintenance, these motors will operate for 15 years or more, even in the toughest conditions.

标准参照

电动机的制造符合现行的下列国际标准，如：

- 国际电工委员会标准 - IEC34及IEC72
- 澳大利亚标准 - AS1359
- 英国标准 - BS5000及BS4999
- 符合欧洲"CE"标志及标准

标准介绍
符合AS 1359-0.BS 4999-0标准

定义及概念
符合IEC-34-1.AS 1359-1.BS 4999-116标准

尺寸符号
符合AS 1359-2.BS 4999-103标准

转向与线端标志
符合IEC 34-8. AS 1359-3. BS 4999-108标准

铭牌数据标志
符合IEC 34-1. AS 1359-4标准

外壳防护等级
符合IEC 34-5. AS 1359-20 BS 4999-105 及AS 1939标准

输出功率与尺寸
符合IEC 72 AS1359-10. BS 4999-141标准

冷却方式分类
符合IEC 34-6. AS 1359-21. BS EN69934-6标准

结构与安装型式代号
符合IEC 34-7 AS 1359-22 BS EN60034-7标准

工作值额定值
符合IEC 34-1. AS 1359-30. BS EN60034-2 及 BS 5000-10标准

使用及运行条件

振动限值
符合IEC 34-14. AS 1359-50. BS 4999-142标准

噪声限值
符合IEC 34-9.AS 1359-51. BS EN60034-9标准

测试
符合IEC 34-1. AS 1359-60. BS 4999-143标准

Applying standard

- International Electrotechnical Commission-IEC 34 and IEC 72.
- Australian Standards-As 1359.
- British Standards-Bs 5000 and BS 4999.
- The requirements for European "CE" marking.

Introduction and list of parts
AS 1359-0.BS 4999-0

Definitions
IEC-34-1.AS 1359-1.BS 4999-116

Dimension symbols
AS 1359-2.BS 4999-103

Direction of rotation and markings of terminals
IEC 34-8. AS 1359-3. BS 4999-108

Rating plate markings
IEC 34-1. AS 1359-4

Protection degree
IEC34-5． AS1359-20、AS1939， BS4999-105

Designations and dimensions
IEC 72 AS. 1359-10. BS 4999-141

Classification of methods of cooling
IEC 34-6. AS 1359-21. BS EN69934-6

Classification of types of enclosure
IEC 34-5. AS 1359-20 BS 4999-105 and AS 1939

Mounting arrangements and types of construction
IEC 34-7. AS 1359-22. BS EN60034-7.

Duty and ratings
IEC 34-1. AS 1359-30. BS EN60034-2 and BS 5000-10

Service and operating conditions
IEC 34-1. AS 1359-31

Temperature limits and measurements of temperature
IEC 34-1. AS 1359-32

Methods of determining losses and efficiency
IEC 34-1. AS 1359-33. BS 4999-102

General characteristics
IEC34-12. AS 1359-41. BS EN60034-1

Vibration limits
IEC 34-14. AS 1359-50. BS 4999-142

Noise level limits
IEC 34-9.AS 1359-51. BS EN60034-9

Tests
IEC 34-1. AS 1359-60. BS 4999-143

Tolerances
IEC 34-1. AS 1359-69.

产品特点

- D1C电机为铸铁机座、端盖及接线盒。
- D1A电机为铸铝机座、接线盒及铸铁端盖。
- D1A电机可带有螺栓固定的底脚，因此电机的接线盒可以位于机体的顶部或任何一侧。
- IP55为最低的防护等级。可以根据需要提供更高的防护等级。在非标准安装位置安装电动机时为了确保电机防护等级，一定要小心谨慎。
- 机座号355以下的电机冷却方式为IC411。
- 所有的电动机都可以提供B3（IM1001）、B3/5（IM2001）、V1（IM3011）安装型式。所有机座号280以下的标准电机可以以任何方向安装，例如：轴伸向上、轴伸向下，等等。还可以安装成B5（IM3001）。
- 160机座以下可以提供B14A和B14B安装型式。
- 工作制为S1的标准电机可按铭牌上给定的额定值连续运转。
- 标准电压和频率为415V 50Hz, 400V 50Hz, 380V 50Hz 和380V 60Hz, 460V 60Hz。
- 电压允差为±10%，超过该限值将会导致电机绕组温升过高。
- 3.0千瓦及以下的电机采用星形连接方法，并且不能采用星三角启动器启动。4.0千瓦及以上为带有六个端子的三角连接，可以采用星三角启动器启动。
- 该种系列的电机的最高环境温度不超过40℃，最高海拔高度为不超过1000米的条件下正常工作，特殊设计可超过此条件下使用。
- 标准电机的绝缘等级为F级绝缘（105K），按B级绝缘（80K）的温升考核。如果用户需要，H级绝缘（125℃）的电机也可以提供。绕组使用高质量的聚酯漆包铜线，并且用无溶剂耐高温聚酯绝缘漆浸渍。
- 定子与转子的叠片是用低耗、双面绝缘的矽钢片制成。
- 所有电机均以高效、低温升为目标而设计，以保证提供经济而长久的服务。
- 总的来说，DALMO系列电机的转子用高纯度铝中压压铸而成的鼠笼设计，因此，该系列电机具有高启动转矩的特点。
- 由于高精度的转子及风扇平衡，该系列电机具有非常低的振动。
- 电机轴承具有C3游隙并在轴伸端预置了波型弹簧垫以降低轴承的噪音，增加轴承的工作寿命。非轴伸端的轴
- 有要求时也可采用其他型式的轴承，如为承受推力负荷安装角接触或四点接触的**QJ**型轴承。
- 轴伸端及非轴伸端的所有轴承都具有油封保护，以免受外部环境的影响。
- **160**机座号及以上电动机的轴承可安装迷宫密封作为外部保护的一种选择。
- 标准噪声水平（**1**米距离外的声功率级），完全在标准要求的范围内。
- 所有标准电动机均可以在任何方向运转。
- 电机轴是用高质量的碳钢制造而成。
- 所有电动机的端盖是用**HT200**灰铸铁制造的。
- **D1A**电动机的接线盒是由铝制成的。１６０机座号以上的电动机的所有接线盒是由钢板及铸铁制成的。所有接线盒都在电机上部安装。
- 电缆入口填料函的螺纹以公制螺纹为标准规格，其尺寸在本样本的尺寸数据中已列出。**PG**的填料函螺纹也可以制造。
- **315**机座号以下所有电动机的风扇罩都是用钢板制成的，而**355**及以上机座号电动机的风扇罩是由钢板或铸铁制成的。
- 采用变频变压**(VVVF)**电源供电时，可以提供强制通风电动机。
- 轴伸向下立式安装的电动机可以提供防雨罩
。
- 所有电动机都可以为加热器和热敏元件提供一个单独的接线盒。
- 电阻测温元件（ＲＴＤ）或者自动测温仪器作为一种选择也可以提供。
- 作为一种选择所有电机都可以安装防凝露加热器。对于**IP56**及**IP66**电动机建议使用防凝露加热器。
- 所有的螺栓及螺钉都经过镀锌处理，防止腐蚀。
- 所有电动机部件在机械加工之前都经过清洗并浸涂磷化底漆（聚乙烯醇缩丁及环氧）２５微米以上。铝制件外面也浸涂磷化底漆。最外层喷涂厚达２５微米的环氧聚合物晾干瓷漆。标准颜色为蓝色（**RAL 5015**）。根据要求也可以提供特殊油漆处理。
- 可以提供特殊要求如：

非标准轴伸、双轴伸、特殊转矩要求的专门转子设计、双速或三速电动机。
８０－１６０机座号的电机可提供铝质和铸铁机座，
１８０－400机座号的电机只提供铸铁机座。

Character of product

- D1C motors cast iron stator frames, endshield and terminal boxes.

- D1A motors have aluminum stator frames, terminal boxes and cast iron endshields.

- D1A motors have bolt feet which can be located so that the terminal box can be on top or on either side.

- IP55 as a minimum-higher ratings are available on request. Care must be taken when mounting motors in a non standard mounting position to maintain the IP rating of the motor.

- Cooling method conforms to ICO141 up to 355 frames.

- All motors are available in B3(IM1001), B3/5 (IM2001), and V1 (IM3011) configuration. All standard motors up to 280 frame can be mounted in any direction, i.e. B5 (Im3001).

- B14A and B14B are available up to 160 frame size.

- Standard motors are rated for continuous duty at full nameplate rating - S1.

- Standard voltages are 415v 50Hz, 400v 50Hz, and 380v 50Hz, 380v 60Hz and 460v 60Hz.

- Voltage tolerance is +/-10%. Voltages beyond these limits will cause a high winding temperature rise.

- Motors up to and including 3.0kW are star connected, and cannot be started with a Star/Delta starter. Motors 4.0kW and above are delta connected with 6 terminals for a Star/Delta starting.

- These motors are designed for operation in ambient temperatures not over 40 C, altitude not higher than 1000 meters.

- Standard motor has insulation class F(105K) , class B (80K) temperature rise. Motor with class H(125C) insulation is available on request. Only high quality polyester covered copper winding wire is used in conjunction with inorganic high temperature polyester varnish.

- Stator and rotor laminations are produced from low loss, double insulated, silicon electrical steel.

- All motors are designed for high efficiency and low temperature rise with long economical service life.

- In general DALMO motor has high starting torque and low starting current because the rotor was made from high density die cast of aluminium with a double cage design.

- These motors have very low vibration levels due to high precision balancing of the rotors and fans.

- In general, the bearings have C3 clearances and are loaded with a wave washer on the driving end which increases bearing life and reduces bearing noise. The non driving end bearing is located to prevent shaft "float". Motors up to 132 frame have "ZZ" sealed for life bearing, while motors from 160 frame and above have open bearing with "flush through" greasing facilities. In line with current practice, motors up to 280 frames have deep groove ball bearing at both ends, while the 315 and 355 frame motors have a roller bearing on the drive end. Roller bearings can be fitted on the drive end of any motor on request.

- Recommended grease for lubricant is Shell Alvania R3.

- Special bearing arrangements can be accommodated such as fitting angular contact, or 4 point contact QJ bearings, for thrust loads.

- All bearings are protected from the external environment with oil seals on the drive and on the drive and non drive end.

- Labyrinth seals can be fitted as an option for external protection of bearings for 160 frames and above.

- Standard noise levels, (sound pressure at 1 metre), are well within the requirements of most standards.

- All standard motors are designed to run in either direction.

- Shafts are made from high quality carbon steel.

- Endshields for all motors are made from T200 cast iron.

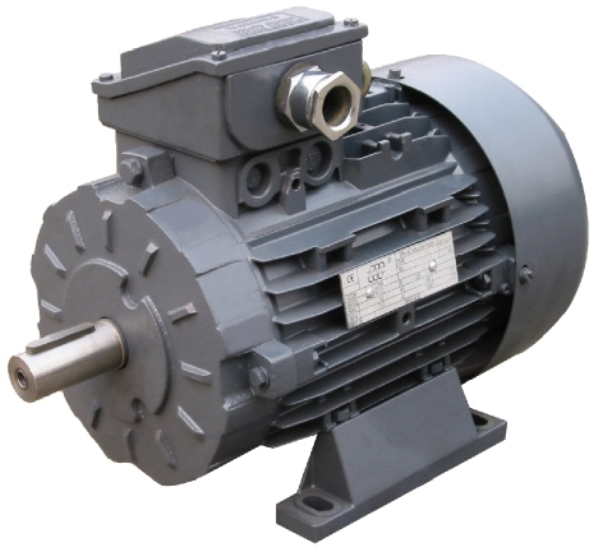

D1A系列三相异步电动机
D1A series 3-phase electric motor

- Terminal boxes are made form aluminium for D1A motors, and cast iron for D1C motors. For 160 frame and above, all terminal boxes are cast iron. All terminal boxes are top mounted.
- Cable gland entries are as standard and the thread sizes are specified with the dimensional data in this brochure. Metric threads are also available.
- Fans are made from glass reinforced polypropylene.
- Aluminium fans are available for all motors as an option.
- Fan cowls are made from pressed steel for all motor up to 315 frame, and cast iron for 355 frame and up..
- Fan Cowls are made from pressed steel for all motor up to 315 frame, and from cast iron for 355 frame.
- Motors can be supplied with force ventilation systems for VVVF drive applications.
- Rainhoods are available for motors mounted shaft down.
- RTD's or thermostats can be supplied as an option.
- RTD's or thermostats can be supplied as an option.
- Anticondensation heaters can be fitted as an option to all motors and are recommended for IP56 and IP66 motors.
- All motors can be supplied with separate terminal boxes for heaters and/or thermistors.
- All bolts and screws are zinc electroplated as protection against corrosion.
- All cast iron motor parts are cleaned and etch primed (polyvinyl butyral and epoxy) to 25 microns or more before machining. Aluminium parts are etch primed on external surfaces. Final top coat paint is an air drying enamel based on epoxy polymer resins to 25 micron or more.
- Special requirements can be supplied such as:
- Non standard flanges, double shaft extensions, special rotor designs for special torque requirements, 2 or 3 speed motors.
- 80-160 frames are available in aluminium and cast iron 180-400 frames are only available in cast iron.

连接方法 Connecting illustration

人 星形连接
Star connection

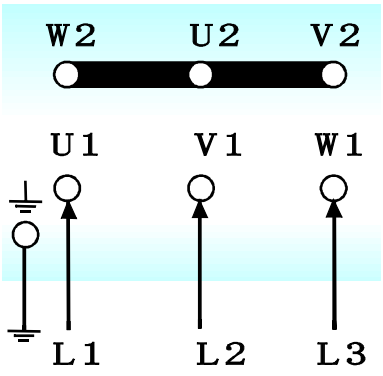

△三角形连接
Delt connection

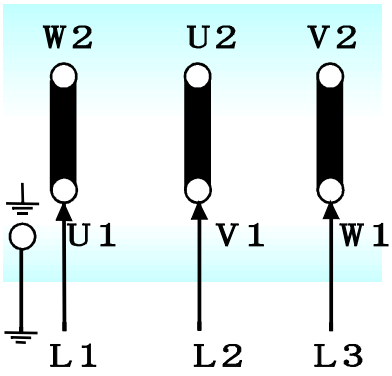

人/△ 星/角启动器连接

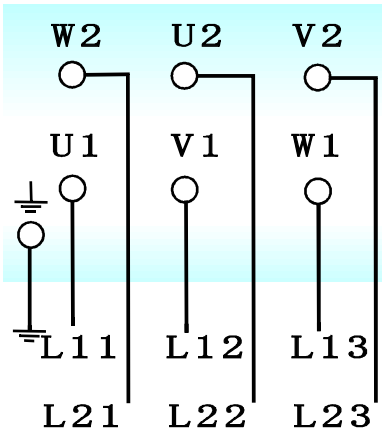

单绕组多速电机
Single winding multi-speed motor

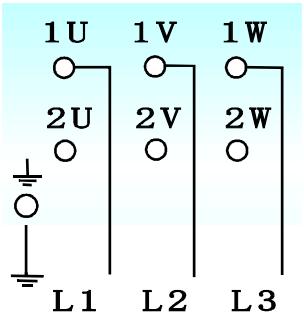

低速 Low speed △接

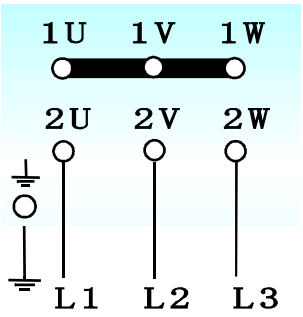

高速 High speed 人人接

双绕组多速电机
Two- windings multi-speed motor

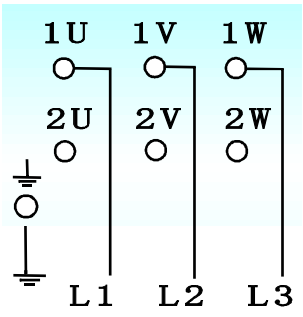

低速 Low speed 人接

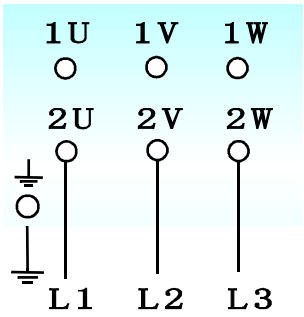

高速 High speed 人接

安装结构形式
Installation structure

卧式底脚安装结构
Horizontal feet structure

B3 63-450

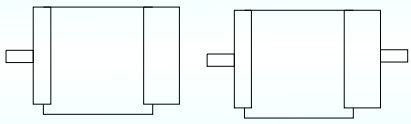

IM1001 IM1002

B6 63-160

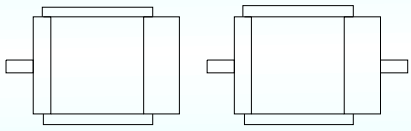

IM 1051 IM 1052

B7 63-160

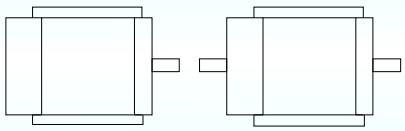

IM1061 IM1062

B8 63-160

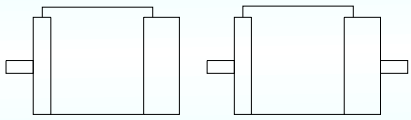

IM 1071 IM1072

立式底脚安装结构
Vertical feet structure

V5 63-160

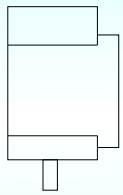

IM 1011

V6 63-160

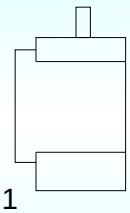

IM 1031

凸缘安装结构
Flange structure

B5 63-280

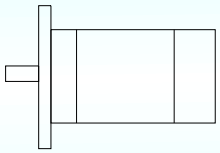

IM 3001

V1 63-400

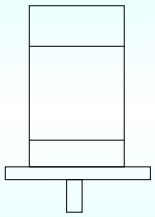

IM 3011

V3 63-160

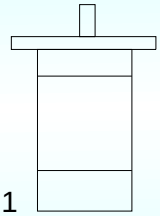

IM 3031

底脚凸缘安装结构
Feet flange structure

B3/B5 63-400

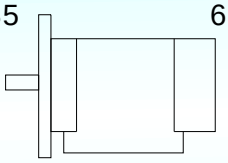

IM 2001

V1/V5 63-400

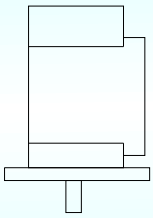

IM 2011

V3/V6 63-160

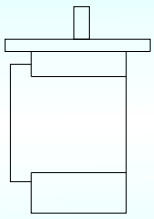

IM 2031

平面安装结构
Horizontal structure

B14 63-160

IM 3601

V18 63-160

IM 3611

V19 63-160

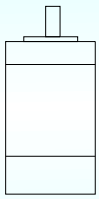

IM 3631

底脚平面安装结构
Horizontal feet structure

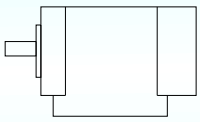

IM 2101

V5/V18 63-160

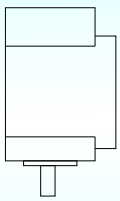

IM 2111

V6/V19 63-160

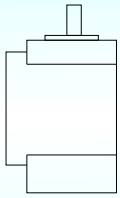

IM 2131

技术数据
Technical specification and data

2 极,同步转速为3000 RPM　　2 pole, synchronous speed 3000 rpm

电机型号 Motor type	额定功率 Rated output kW	满载转速 Full load speed r/min	INL 400V A	IFL 380V A	IFL 400V A	IFL 415V A	IST/IFL	效率 Efficiency 100%FL	75%FL	50%FL	功率因素 Power factor 100%FL	75%FL	50%FL	满载转矩 Full load torque N.m	TST TFL	TPU TFL	TM TFL	转动惯量 Moment inertia J kg.m²	噪音水平 Noise level 1M dB(A)	净重 Net weight kg D1C	D1A
D1C(D1A)63-2	0.18	2780	0.32	0.53	0.5	0.48	4.7	64	63	59	0.81	0.75	0.68	0.62	2.50	2.00	3.00	0.0003	53		7
D1C(D1A)711-2	0.37	2820	0.6	0.98	0.93	0.9	5	71	70.8	68	0.81	0.75	0.69	1.25	2.40	2.00	2.90	0.0006	57		10
D1C(D1A)712-2	0.55	2830	0.7	1.4	1.3	1.2	5.5	75	74	69	0.82	0.75	0.68	1.85	3.00	2.20	3.30	0.0007	60		10
D1C(D1A)801-2	0.75	2840	0.95	1.8	1.7	1.7	5.5	75	74	71	0.83	0.8	0.67	2.5	2.40	1.80	2.60	0.0008	61	19	11
D1C(D1A)802-2	1.1	2840	1.3	2.6	2.4	2.3	5.5	78	77.8	75	0.84	0.79	0.67	3.7	2.40	1.90	2.60	0.0009	64	20	12
D1C(D1A)90S-2	1.5	2840	1.5	3.4	3.2	3.1	6	79	789	77	0.85	0.81	0.71	5.04	2.90	2.20	3.10	0.0012	72	26	16
D1C(D1A)90L-2	2.2	2840	2	4.8	4.6	4.4	6	82	81.8	80	0.85	0.81	0.72	7.4	2.80	2.30	3.00	0.0014	71	28	18
D1C(D1A)100L-2	3	2850	2.3	6.3	6	5.8	7	83	83.1	82	0.87	0.84	0.75	10	3.00	2.40	3.40	0.0039	75	43	25
D1C(D1A)112M-2	4	2870	2.7	7.9	7.5	7.3	6.5	85	85	84	0.9	0.87	0.8	13	2.50	2.00	3.00	0.0055	76	47	31
D1C(D1A)112M2-2	5.5	2890	3.5	10.7	10.2	9.8	7.5	86.5	86.7	86	0.9	0.88	0.8	18	2.80	2.20	3.20	0.007	78	55	35
D1C(D1A)132S1-2	5.5	2900	3.9	10.8	10.3	9.9	7.5	86	86.1	83.5	0.9	0.88	0.79	18	2.90	2.30	3.40	0.0109	80	70	48
D1C(D1A)132S2-2	7.5	2900	4.7	14.6	13.8	13.3	7.5	87	86.7	84.6	0.9	0.87	0.8	25	2.70	2.20	3.30	0.013	80	73	51
D1C(D1A)132M-2	11	2900	6.1	21	20	19.3	7.5	88	88.2	87.5	0.9	0.88	0.8	36	2.50	2.10	3.00	0.028	83	84	63
D1C160M1-2	11	2930	6	21.2	20.2	19.5	7.2	88.4	88.3	87.8	0.89	0.87	0.8	36	2.20	1.90	2.90	0.038	82	125	
D1C160M2-2	15	2930	8.4	28.8	27.3	26.3	7.2	89	88.9	87.7	0.89	0.87	0.8	49	2.30	1.90	3.00	0.045	83	135	
D1C160L-2	18.5	2930	8.9	34.7	33	31.8	7.5	90	89.8	87.3	0.9	0.88	0.82	60	2.40	1.90	2.90	0.055	82	153	
D1C180M-2	22	2940	12.1	41	39	38	7.5	90	89.9	87.3	0.9	0.88	0.81	71	2.50	1.60	3..1	0.075	84	175	
D1C200L1-2	30	2940	14.8	55.6	53	51	6.5	91.1	90.8	89.3	0.9	0.87	0.82	97	2.30	1.80	2.70	0.124	84	265	
D1C200L2-2	37	2950	16.6	68	64.5	62	7	92	91.7	89.6	0.9	0.88	0.833	120	2.50	1.80	2.90	0.139	88	285	
D1C225M-2	45	2950	21	81.4	77.3	74.5	7	92.3	91.9	89.5	0.91	0.9	0.86	145	2.50	2.10	3.10	0.233	90	336	
D1C250M-2	55	2960	32	100	95.4	92	7.5	92.5	92.7	89.8	0.9	0.88	0.82	177	2.60	2.00	3.40	0.312	90	430	
D1C250M2-2	75	2970	36.5	135	129	124	7	93.5	93	92.1	0.9	0.87	0.81	241	2.20	1.70	3.10	0.412	90	505	
D1C280S-2	75	2970	36	136	129	124	7	93.4	92.7	90.1	0.9	0.89	0.84	241	2.20	1.70	3.00	0.597	89	535	
D1C280M-2	90	2970	38.5	161	153	147	7	93.5	93	91.6	0.91	0.9	0.88	289	2.10	1.80	3.10	0.675	90	577	
D1C280M2-2	110	2970	41	193	184	177	7	94	93.9	93.1	0.92	0.92	0.9	353	2.70	1.80	3.00	0.86	90	620	
D1C315S-2	110	2975	42.4	195	185	178	7	94.1	93.8	92.7	0.91	0.9	0.88	353	2.40	2.00	2.70	1.18	89	1100	
D1C315M-2	132	2975	56	231	219	211	7	94.5	94.4	92.9	0.92	0.91	0.87	423	2.40	2.00	2.80	1.55	89	1150	
D1C315L1-2	160	2975	63	279	265	256	7.5	94.6	94.3	93.2	0.92	0.91	0.88	513	2.70	1.80	3.00	1.76	89	1195	
DD1C315L2-2	200	2975	69	348	331	319	7.5	94.8	94.7	93.3	0.92	0.82	0.75	642	2.70	1.90	3.10	2.02	90	1255	
D1C355M-2	250	2980	157	470	446	430	6.5	95.1	94.2	92.3	0.85	0.83	0.76	800	1.80	1.50	2.50	3.56	94	1603	
D1C355L-2	315	2980	188	533	504	485	6.8	95.6	95	93.5	0.94	0.86	0.78	1007	1.50	1.20	2.40	4.15	94	1733	
D1C400L-2	355	2980	210	598	568	549	6.8	95.6	95	93.6	0.94	0.88	0.81	1138	1.40	1.10	2.30	6.6	97	2110	

注：除非另有标明，D1A和D1C两种电机的数据是相同的。

Note: Unless otherwise stated, D1A and D1C data are the same.

INL=无负荷电流　IFL=满负荷电流　IST=堵转电流　TST=堵转转矩

INL= No Load Current　IFL=Full Load Current　IST=Locked Rotor Current　TST=Locked Rotor Torque

TFL=满负荷转矩　TPU=最小转矩　TM=最大转矩

TFL=Full Load Torque　TPU=Pull Up Torque　TM=Maximum Torque

技术数据
Technical specification and data

4 极,同步转速为1500 RPM　　4 pole, synchronous speed 1500 rpm

电机型号 Motor type	额定功率 Rated output kW	满载转速 Full load speed r/min	INL 400V A	IFL 380V A	IFL 400V A	IFL 415V A	IST/IFL	效率 Efficiency 100%FL	75%FL	50%FL	功率因素 Power factor 100%FL	75%FL	50%FL	满载转矩 Full load torque N.m	TST TFL	TPU TFL	TM TFL	转动惯量 Moment inertia J kg.m²	噪音水平 Noise level 1M dB(A)	净重 Net weight kg D1C	D1A
D1A632-4	0.18	1370	0.45	0.6	0.57	0.55	4	63	63	58	0.72	0.62	0.53	1.25	2.20	2.00	2.50	0.0006	49		7
D1A712-4	0.37	1370	0.75	1.1	1	1	4.3	69	71	70	0.74	0.65	0.53	2.58	2.30	2.00	2.50	0.0016	50		10
D1C(D1A)801-4	0.55	1410	1	1.5	1.46	1.4	4.5	72.5	73	69	0.75	0.67	0.54	3.7	2.20	1.90	2.40	0.002	55	18	10
D1C(D1A)802-4	0.75	1410	1.4	2.1	2	1.9	4.8	72.6	73.1	0.69	0.755	0.66	0.54	5.1	2.10	1.80	2.40	0.002	55	19	11
D1C(D1A)90S-4	1.1	1410	1.8	2.9	2.7	2.6	4.5	76	77	75	0.77	0.68	0.55	7.5	2.00	1.80	2.30	0.0021	58	25	15
D1C(D1A)90L-4	1.5	1410	2.2	3.7	3.5	3.4	4.7	79	80.5	79.5	0.785	0.71	0.57	10.2	2.40	2.00	2.50	0.003	58	26	17
D1C(D1A)100L1-4	2.2	1410	3	5.2	4.9	4.8	5.5	80	80.7	79.2	0.805	0.72	0.6	14.9	2.50	2.10	2.70	0.007	61	35	25
D1C(D1A)100L2-4	3	1410	3.7	6.8	6.5	6.2	5.7	82.5	83.3	82	0.81	0.74	0.61	20.3	2.40	2.10	2.90	0.007	61	38	28
D1C(D1A)112M-4	4	1430	4.5	8.9	8.4	8.1	6	83.6	84.7	83.5	0.82	0.76	0.65	26.7	2.50	2.10	2.90	0.0095	65	50	35
D1C(D1A)132S-4	5.5	1445	5.6	11.7	11.2	10.7	6.5	86.3	87	85.2	0.825	0.77	0.66	36.3	2.40	2.00	3.00	0.0214	71	70	50
D1C(D1A)132M-4	7.5	1445	6.5	15.3	14.6	14	7	87.5	88	87	0.85	0.8	0.7	49.6	2.50	2.00	2..8	0.0296	71	80	58
D1C(D1A)132M2-4	11	1445	8.3	22.2	21.1	20.3	6.5	88.6	89.2	88.1	0.85	0.81	0.71	72.7	2.20	1.80	2.60	0.062	71	90	67
D1C160M-4	11	1445	8.5	22.4	21.3	20.5	7	88.7	87.5	83.3	0.84	0.81	0.74	72.7	2.10	1.80	2.60	0.075	75	125	
D1C160L-4	15	1455	12.5	30	28.6	27.6	7.5	90	88.7	83.5	0.84	0.8	0.75	98.4	2.60	2.00	3.30	0.092	75	147	
D1C180M-4	18.5	1470	13.5	36	34.3	33	7	90	91.2	89	0.865	0.82	0.73	120	2.30	1.90	3.20	0.139	76	170	
D1C180L-4	22	1470	14.8	41.7	39.7	38.2	7.5	91	91.1	89.8	0.88	0.84	0.75	143	2.40	2.00	3.10	0.158	76	185	
D1C200L-4	30	1470	18.5	56.3	53.5	51.6	6.5	92	91.9	90.8	0.88	0.86	0.78	195	2.20	1.80	3.00	0.262	79	285	
D1C225S-4	37	1475	23	70.6	67	64.7	6.6	92	92	91	0.865	0.85	0.77	239	2.10	1.70	2.50	0.406	81	338	
D1C225M-4	45	1475	27	85	81	78	6.7	92.4	92.5	91.3	0.87	0.85	0.78	291	2.30	1.80	2.90	0.469	81	358	
D1C250M-4	55	1475	34	104	98	95	6.5	92.8	92.7	91.6	0.87	0.84	0.78	356	2.40	1.90	2.70	0.66	83	450	
D1C250M2-4	75	1480	48	140	133	129	6.5	93.8	93.7	93.5	86.5	0.83	0.76	484	2.20	1.70	2.90	0.88	83	535	
D1C280S-4	75	1480	46	138	132	127	6	93.5	93.2	91.7	0.88	0.86	0.8	484	2.10	1.70	2.90	1.12	4	563	
D1C280M-4	90	1480	45	163	155	150	6.5	94	93.8	92.8	0.89	0.87	0.81	581	2.30	1.70	2.90	1.46	86	635	
D1C280M2-4	110	1480	55	199	189	182	6.4	94.3	94.2	93.5	0.89	0.88	0.82	710	2.40	1.90	2.60	2.68	86	720	
D1C315S-4	110	1485	53	201	191	184	6	94.4	94.2	94	0.88	0.88	0.83	707	2.00	1.60	2.90	3.11	87	1125	
D1C315M-4	132	1485	69	244	231	223	7	94.6	94.5	93	0.87	0.86	0.82	849	1.90	1.60	3.10	3.29	88	1175	
D1C315L1-4	160	1485	84	296	281	271	6	95.5	95	94	0.86	0.85	0.79	1029	2.30	1.70	3.00	3.79	88	1240	
D1C315L2-4	200	1485	104	360	342	329	5	96	95.5	94.4	0.88	0.87	0.8	1286	2.50	1.90	2.70	4.49	89	1340	
D1C355M-4	250	1485	106	444	422	407	6.5	95	94.5	93.1	0.9	0.89	0.86	1607	2.10	1.70	3.10	5.67	89	1668	
D1C355L-4	315	1485	108	551	523	504	6.3	95.5	95.4	94.1	0.91	0.9	0.88	2025	2.00	1.60	3.10	6.66	90	1828	
D1C400L1-4	355	1486	160	615	584	563	7.8	95.7	95.4	94.3	0.917	0.91	0.865	2281	2.10	1.70	3.20	13.1	91	2650	
D1C400L2-4	400	1484	180	687	653	629	7.9	95.7	95.4	94.3	0.924	0.917	0.862	2574	2.20	1.70	3.20	14.6	91	2680	
D1C400L3-4	450	1485	200	773	735	708	8.6	95.8	95.5	94.4	0.923	0.916	0.857	2894	2.50	1.90	3.40	15.9	91	2730	
D1C450L-4	500	1488	230	863	820	790	7.9	95.7	95.4	94.3	0.92	0.913	0.86	3210	2.20	1.80	3.20	18.62	91	2895	

注：除非另有标明，D1A和D1C两种电机的数据是相同的。

Note: Unless otherwise stated, D1A and D1C data are the same.

INL=无负荷电流　IFL=满负荷电流　IST=堵转电流　TST=堵转转矩

INL= No Load Current　IFL=Full Load Current　IST=Locked Rotor Current　TST=Locked Rotor Torque

TFL=满负荷转矩　TPU=最小转矩　TM=最大转矩

TFL=Full Load Torque　TPU=Pull Up Torque　TM=Maximum Torque

技术数据
Technical specification

6 极,同步转速为1000 RPM　　6 pole, sychronous speed 1000

电机型号 Motor type	额定功率 Rated output kW	满载转速 Full load speed r/min	INL 400V A	IFL 380V A	IFL 400V A	IFL 415V A	IST/IFL	效率 Efficiency 100%FL	75%FL	50%FL	功率因素 Power factor 100%FL	75%FL	50%FL	满载转矩 Full load torque N.m	TST/TFL	TPU/TFL	TM/TFL	转动惯量 Moment inertia J kg.m²	噪音水平 Noise level 1M dB(A)	净重 Net weight kg D1C	D1A
D1C(D1A)801-6	0.37	920	0.8	1.2	1.2	1.1	3.5	63.3	63	55	0.72	0.62	0.51	3.8	1.80	1.60	2.00	0.0023	50	18	11
D1C(D1A)802-6	0.55	920	1.1	1.7	1.6	1.5	3.5	69	70	63	0.72	0.62	0.5	5.7	1.80	1.60	2.00	0.003	50	20	14
D1C(D1A)90S-6	0.75	920	1.5	2.2	2.1	2	4.0	71.5	72.4	67	0.72	0.62	0.51	7.8	1.90	1.70	2.20	0.003	55	23	16
D1C(D1A)90L-6	1.1	920	2	3.1	3	2.9	4.0	73	74.2	70	0.73	0.64	0.51	11.4	2.10	1.80	2.50	0.0035	60	26	19
D1C(D1A)100L-6	1.5	920	2.5	4	3.8	3.7	4.5	75.8	76.1	72	0.75	0.66	0.53	15.4	2.30	1.90	2.70	0.0069	65	34	23
D1C(D1A)112M-6	2.2	935	3.1	5.6	5.3	5.1	4.5	78.5	78.7	76	0.76	0.73	0.6	22.4	2.00	1.70	2.30	0.0138	69	47	30
D1C(D1A)132S-6	3	960	4.7	7.4	7	6.8	5.5	81.4	81.1	77	0.76	0.68	0.55	29.7	2.00	1.70	2.40	0.02285	69	53	43
D1C(D1A)132M1-6	4	960	5.8	9.6	9.1	8.8	6.0	83.4	83.2	80	0.76	0.68	0.56	39.6	2.20	1.80	3.00	0.035	66	71	54
D1C(D1A)132M2-6	5.5	960	7.7	12.8	12.2	11.8	6.5	84.5	84.3	81	0.77	0.69	0.56	54.4	2.20	1.90	2.50	0.045	66	81	59
D1C160M-6	7.5	965	8.1	16.9	16.1	15.5	5.5	87.5	88.1	87	0.77	0.71	0.6	74	2.00	1.70	2.40	0.088	72	122	
D1C160L-6	11	965	10.7	24.2	23	22.2	6.0	88.4	89	88	0.78	0.75	0.61	108.8	2.10	1.70	2.30	0.115	72	147	
D1C180L-6	15	970	14	31.8	30.2	29.1	6.0	88.6	88.9	87.5	0.81	0.77	0.64	147.6	2.30	1.70	2.30	0.207	72	180	
D1C200L1-6	18.5	975	17	38	36.2	35	6.0	90	89.8	88.5	0.82	0.77	0.65	181	2.10	1.70	3.00	0.315	72	260	
D1C200L2-6	22	975	16.8	44.2	42	40.5	6.0	90	90.1	89	0.84	0.8	0.7	215	2.10	1.60	2.60	0.35	72	270	
D1C225M-6	30	980	21	59.3	56.3	54.3	5.5	91.5	91.4	90.5	0.84	0.81	0.72	292	2.40	1.60	2.70	0.547	72	330	
D1C250M-6	37	980	25	70	66.7	64	6.6	92.1	91.8	90	0.87	0.82	0.75	360	2.20	1.80	2.70	0.835	77	425	
D1C280S-6	45	985	27	85.4	81	78	6.6	92	92.2	91	0.87	0.83	0.75	436	2.40	1.70	3.20	1.4	77	520	
D1C280M1-6	55	985	30	104	99	95	6.6	92.6	93	92.3	0.87	0.85	0.8	533	2.20	1.60	3.00	1.65	77	570	
D1C280M2-6	75	985	48	138	131	127	6.8	93.6	93	91.9	0.88	0.85	0.79	727	2.80	1.80	3.10	3.2	80	670	
D1C315S-6	75	985	45	142	135	130	6.0	94.2	94.1	93.2	0.85	0.83	0.78	727	2.20	1.70	2.90	4.1	80	1070	
D1C315M-6	90	985	51	170	162	156	6.0	94.4	94.3	93.3	0.85	0.83	0.78	872	2.20	1.60	3.20	4.28	80	1120	
D1C315L1-6	110	985	57	209	198	191	6.0	94.3	95.1	0.94	0.85	0.84	0.79	1066	2.20	1.70	3.00	5.45	80	1200	
D1C315L2-6	132	990	69	244	232	223	6.5	94.5	94.7	94.1	0.87	0.85	0.8	1273	2.30	1.50	2.80	6.12	80	1290	
D1C355M1-6	160	990	93	291	276	266	6.8	95	95	933	0.88	0.86	0.81	1543	1.80	1.40	2.50	8.85	83	1570	
D1C355M2-6	200	990	117	360	342	329	6.5	96	96	95	0.88	0.86	0.81	1929	2.00	1.50	2.40	9.55	83	1680	
D1C355L-6	250	990	155	445	422	407	6.0	96	96	94.8	0.89	0.87	0.82	2411	1.80	1.40	2.40	10.63	83	1860	
D1C400L1-6	280	993	190	499	474	457	7.8	95.2	95	94	0.895	0.884	0.813	2690	2.30	1.60	3.10	14.9	92	2530	
D1C400L2-6	315	994	205	559	531	512	8.0	95.4	95.2	94.1	0.897	0.886	0.815	3028	2.40	1.60	3.10	16.4	92	2730	
D1C400L3-6	355	994	240	632	600	578	8.5	95.4	95.2	94	0.895	0.885	0.814	3410	2.70	1.70	3.30	24.2	92	3000	
D1C450L1-6	400	994	285	720	684	659	7.2	95.3	95	93.7	0.886	0.88	0.81	3844	2.10	1.50	2.90	24.6	92	2860	
D1C450L2-6	450	994	300	813	773	745	7.9	95.3	95	93.6	0.882	0.877	0.808	4322	2.50	1.60	3.10	28.8	92	3100	

注：除非另有标明，D1A和D1C两种电机的数据是相同的。

Note: Unless otherwise stated, D1A and D1C data are the same.

INL=无负荷电流　IFL=满负荷电流　IST=堵转电流　TST=堵转转矩

INL= No Load Current　IFL=Full Load Current　IST=Locked Rotor Current　TST=Locked Rotor Torque

TFL=满负荷转矩　TPU=最小转矩　TM=最大转矩

TFL=Full Load Torque　TPU=Pull Up Torque　TM=Maximum Torque

技术数据
Technical specification and data

8,10,12极,同步转速为750,600,500 RPM　8,10,12 pole, synchronous speed 750,600,500

电机型号 Motor type	额定功率 Rated output kW	满载转速 Full load speed r/min	INL 400V A	IFL 380V A	IFL 400V A	IFL 415V A	IST/IFL	效率 Efficiency 100%FL	75%FL	50%FL	功率因素 Power factor 100%FL	75%FL	50%FL	满载转矩 Full load torque N.m	TST/TFL	TPU/TFL	TM/TFL	转动惯量 Moment inertia J kg.m²	噪音水平 Noise level 1M dB(A)	净重 Net weight kg D1C	D1A
D1C(D1A)90S-8	0.37	670	1	1.42	1.3	1.3	3.4	65	64.5	56	0.61	0.53	0.43	5	1.90	1.70	2.20	0.004	56	30	18
D1C(D1A)90L-8	0.55	670	1.5	2	1.9	1.87	3.5	68.1	66.6	59	0.6	0.51	0.421	8	1.90	1.70	2.20	0.004	56	33	19
D1C(D1A)100L1-8	0.75	690	1.7	2.4	2.26	2.18	3.6	70.5	70	63	0.68	0.56	0.45	10	1.90	1.70	2.30	0.008	59	35	21
D1C(D1A)100L2-8	1.1	690	2.4	3.3	3.15	3.04	3.7	73	73.5	69	0.69	0.59	0.46	15	2.00	1.80	2.40	0.011	59	37	23
D1C(D1A)112M1-8	1.5	690	3	4.3	4.1	4	4.0	76.5	77	74	0.69	0.59	0.45	21	2.30	1.90	2.50	0.017	60	47	32
D1C(D1A)132S-8	2.2	710	3.7	5.8	5.5	5.3	4.7	79.5	79.6	77.5	0.73	0.64	0.51	29	2.10	1.80	2.40	0.03	60	65	50
D1C(D1A)132M1-8	3	710	4.5	7.6	7.2	7	4.7	81	82	80	0.74	0.66	0.54	40	2.20	1.90	2.50	0.04	65	73	57
D1C160M1-8	4	720	6	10.1	9.6	9.2	4.6	81.4	81.7	80	0.74	0.66	0.55	53	1.90	1.70	2.20	0.075	65	110	
D1C160M2-8	5.5	720	7.8	13.2	12.5	12.1	5.0	85.5	86.6	85.4	0.74	0.67	0.54	73	2.10	1.80	2.60	0.093	65	120	
D1C160L-8	7.5	720	9.5	17.5	16.7	16.1	6.0	86.6	87..4	86.3	0.75	0.68	0.55	99	2.20	1.90	2..6	0.125	65	145	
D1C180L-8	11	720	13	25.3	24	23	5.5	87	87.5	86.1	0.76	0.71	0.58	146	2.30	1.90	2.60	0.203	70	170	
D1C200L-8	15	730	16	33.7	32	31	5.6	89	89.3	88.2	0.76	0.71	0.59	196	2.20	1.80	2.50	0.34	73	265	
D1C225S-8	18.5	730	21	41.8	39.7	38.3	6.0	89.7	89.9	89	0.75	0.71	0.6	242	2.20	1.80	2.50	0.49	73	315	
D1C225M-8	22	730	22	47.5	45	43.5	5.2	90.3	90.5	90	0.78	0.73	0.62	288	2.10	1.70	2.70	0.547	73	325	
D1C250M-8	30	730	29	64	60.7	58.5	5.6	90.3	90.6	88.5	0.79	0.74	0.63	392	2.10	1.80	2.60	0.83	75	430	
D1C280S-8	37	740	31	77.2	73.4	70.7	5.5	91	91.1	90	0.8	0.76	0.65	477	2.20	1.90	2.50	1.4	76	520	
D1C280M1-8	45	740	36	92.2	87.6	84.5	5.4	91.5	91.7	90.1	0.81	0.77	0.66	580	2.20	1.80	3.10	1.65	76	575	
D1C280M2-8	55	740	44	111	106	102	6.0	92.6	92.1	91	0.81	0.78	0.67	709	2.10	1.90	2.70	3.65	79	670	
D1C315S-8	55	740	43	111	105	101	5.6	93.3	93	992.5	0.81	0.78	0.66	709	1.90	1.60	2.50	4.8	79	1040	
D1C315M-8	75	740	51	149	141	136	6.0	93.5	93.7	91.6	0.82	0.78	0.7	967	2.10	1.50	2.40	5.58	80	1150	
D1C315L1-8	90	740	67	178	169	163	6.4	93.7	93.8	92.2	0.82	0.77	0.68	1161	2.30	1.80	2.50	6.37	80	1235	
D1C315L2-8	110	740	76	217	206	199	6.3	94	94.1	92.5	0.82	0.79	0.71	1419	2.20	1.90	2.50	7.23	80	1325	
D1C355M1-8	132	745	87	255	242	233	6.0	94.8	94.6	93.5	0.83	0.79	0.7	1692	1.70	1.10	2.20	10.55	79	1960	
D1C355M2-8	160	745	106	308	293	282	5.5	95	95.1	94	0.83	0.8	0.72	2050	1.50	1.20	2.20	11.73	79	2020	
D1C355L-8	200	745	115	374	356	343	5.3	95.5	95.2	94.5	0.85	0.84	0.76	2563	1.40	1.30	2.30	12.85	79	2190	
D1C400L1-8	220	740	145	420	399	385	6.62	95	94.7	93.5	0.838	0.81	0.73	2839	1.99	1.3	2.44	14.9	85	2590	
D1C400L2-8	250	740	165	475	451	435	6.6	95.1	94.8	93.6	0.84	0.81	0.74	3226	1.98	1.3	2.42	16.4	85	2600	
D1C400L3-8	315	744	250	586	557	536	7.9	95	94.7	93.5	0.86	0.82	0.75	4045	2	1.7	3.2	28	85	2780	
D1C450L1-8	355	744	330	672	638	615	7.2	95	94.7	93.4	0.845	0.81	0.74	4560	1.7	1.3	3.0	26.6	90	2945	
D1C450L2-8	400	744	400	765	727	700	7.6	95	94.7	93.3	0.836	0.8	0.73	5135	1.9	1.5	3.2	29.2	90	3075	
D1C315S-10	45	590	48	99.7	94.7	91.3	6.2	91.5	92.5	91.8	0.75	0.725	0.62	728	1.5	1.1	2.0	4.79	82	810	
D1C315M-10	55	590	58	121	115	111	6.2	92	92.9	92	0.75	0.72	0.61	890	1.5	1.3	2.0	6.37	82	930	
D1C315L1-10	75	590	78	162	154	148	6.2	92.5	93.5	92.5	0.76	0.73	0.625	1214	1.5	1.2	2.00	7.0	82	1045	
D1C315L2-10	90	590	92.5	191	182	175	6.2	93	93.5	92.3	0.77	0.73	0.623	1456	1.5	1.3	2.0	7.15	82	1115	
D1C355M1-10	110	590	111	230	219	211	6.0	93.2	94.1	92.9	0.78	0.755	0.66	1780	1.3	1.2	2.0	12.55	90	1563	
D1C355M2-10	132	590	132	275	261	252	6.0	93.5	94	92.8	0.78	0.75	0.65	2136	1.3	1.4	2.0	13.75	90	1661	
D1C355L-10	160	590	160	334	317	306	6.0	93.5	94.1	93	0.78	0.754	0.65	2589	1.3	1.4	2.0	14.86	90	1802	
D1C400L1-10	200	590	195	405	385	371	5.5	94.8	94	94.1	0.792	0.76	0.65	3237	1.7	1.4	2.04	21.7	93	2600	
D1C400L2-10	250	595	260	501	476	459	5.5	94.7	94.5	94.3	0.8	0.78	0.7	4010	1.8	1.4	2.4	28	90	3015	
D1C450L1-10	280	595	310	568	540	520	5.2	94.4	94.2	93.8	0.793	0.77	0.68	4495	1.7	1.3	2.3	26	90	3215	
D1C450L2-10	315	595	350	638	606	585	5.2	94.4	94.1	93.7	0.794	0.77	0.69	5058	1.7	1.3	2.2	28.8	90	3375	
D1C400L1-12	132	490	160	297	282	272	5.1	90.1	94.5	89.5	0.75	0.72	0.63	2572	1.5	1.2	1.8	18.3	94	1680	
D1C400L2-12	160	490	193	358	340	328	5.2	90	90.3	89.2	0.755	0.724	0.633	3118	1.5	1.2	1.8	20.7	94	1820	
D1C450L1-12	200	495	290	448	426	410	4.8	93.9	93.2	92.4	0.722	0.67	0.56	3854	1.7	1.3	2.2	22.4	94	2570	
D1C450L2-12	250	495	390	557	529	510	4.9	93.9	93.2	92.5	0.726	0.68	0.57	4815	1.7	1.3	2.2	28.8	94	3040	

注：除非另有标明，D1A和D1C两种电机的数据是相同的。

Note: Unless otherwise stated, D1A and D1C data are the same.

INL=无负荷电流　IFL=满负荷电流　IST=堵转电流　TST=堵转转矩

INL= No Load Current　IFL=Full Load Current　IST=Locked Rotor Current　TST=Locked Rotor Torque

TFL=满负荷转矩　TPU=最小转矩　TM=最大转矩

TFL=Full Load Torque　TPU=Pull Up Torque　TM=Maximum Torque

D1A系列安装与外形尺寸
Installation and overall dimensions of D1A series motor

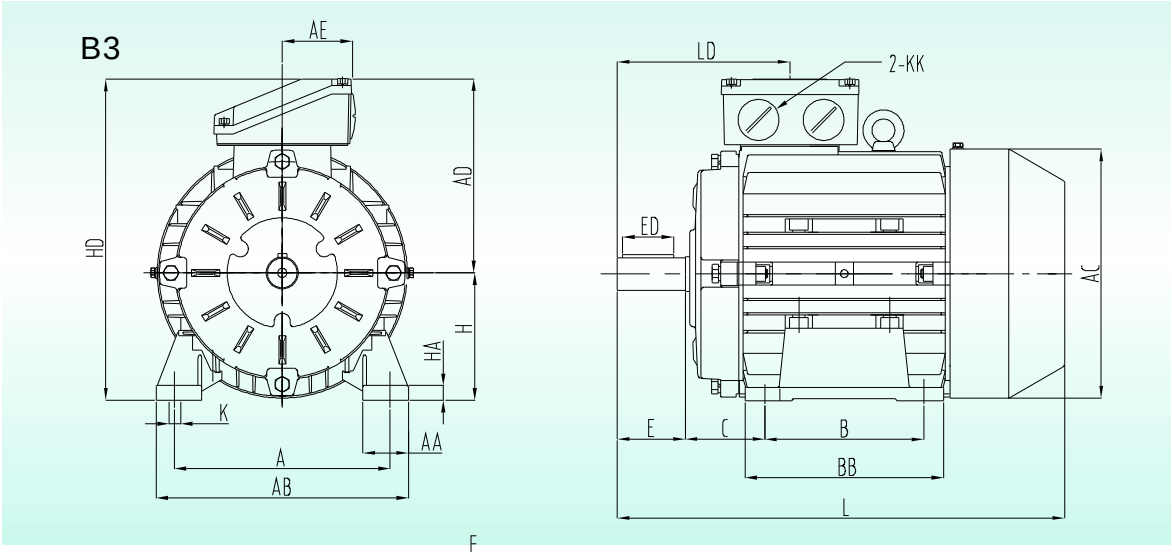

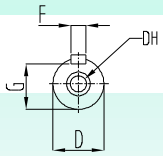

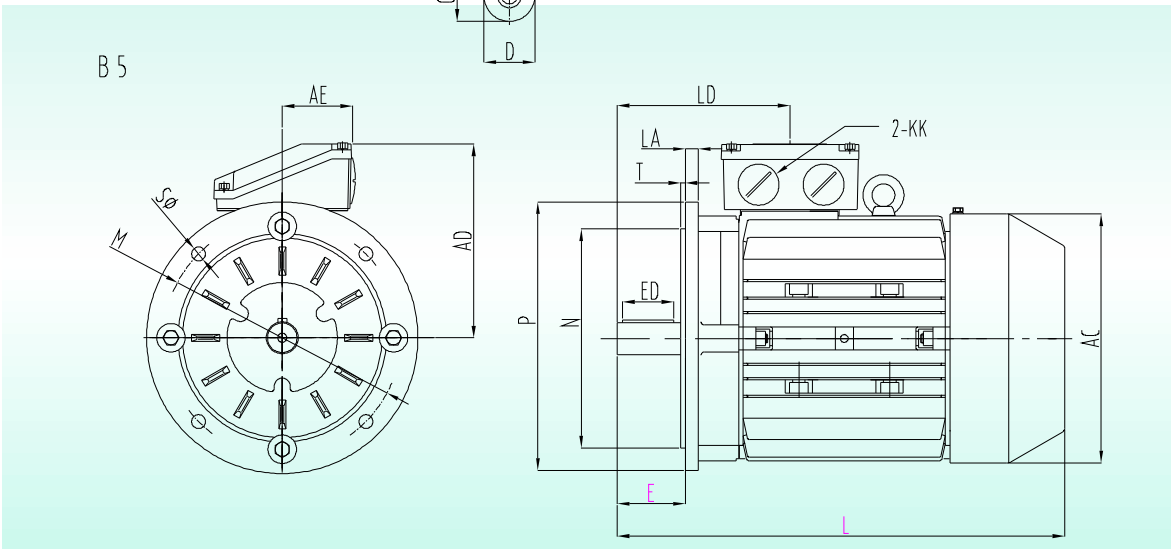

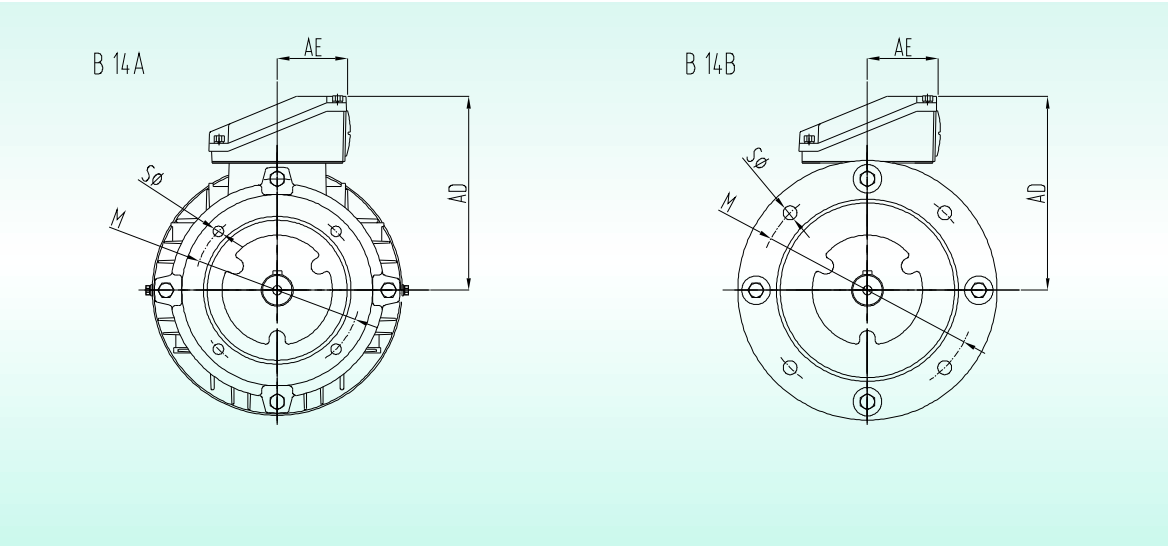

D1A系列安装与外形尺寸
Installation and overall dimensions of D1A series motor

B3

机座号	A	AA	AB	AC	AD	AE	B	BB	C	D	DH	E	ED	F	G	H	HA	HD	K	KK	L	LD
D1A71	112	30	140	145	124	55	90	140	45	14	M4 x 10	30	20	5	11	71	6	195	7	M20	250	98
D1A80	125	35	165	175	140	65	100	130	50	19	M6 x 16	40	25	6	16	80	10	215	10	M25	295	115
D1A90S	140	37	180	195	150	65	100	140	56	24	M8 x 19	50	40	8	20	90	13	235	10	M25	320	130
D1A90L	140	37	180	195	150	65	125	165	56	24	M8 x 19	50	40	8	20	90	13	235	10	M25	345	130
D1A100	160	45	200	215	165	65	140	180	63	28	M10 x 22	60	45	8	24	100	14	265	12	M32	375	145
D1A112	190	45	230	240	180	65	140	185	70	28	M10 x 22	60	45	8	24	112	14	290	12	M32	405	150
D1A132S	216	50	275	275	190	65	140	205	89	38	M12 x 28	80	60	10	33	132	16	325	12	M32	490	180
D1A132M	216	50	275	275	190	65	178	243	89	38	M12 x 28	80	60	10	33	132	16	325	12	M32	530	180

B5

机座号 Frame	M	N	P	S	T	LA
71	130	110	160	10	3.5	8
80	165	130	200	12	3.5	10
90S	165	130	200	12	3.5	12
90L	165	130	200	12	3.5	12
100	215	180	250	15	4	12
112	215	180	250	15	4	12
132S	265	230	300	15	4	13
132M	265	230	300	15	4	13

B14A

机座号 Frame	M	N	P	S	T
71	85	70	105	M6	2.5
80	100	80	120	M6	3
90	115	95	140	M8	3
100	130	110	160	M8	3.5
112	130	110	160	M8	3.5
132	165	130	200	M10	3.5
160M	215	180	250	M12	4
160L	215	180	250	M12	4

B5 缩小型 Reduced B5

机座号 Frame	M	N	P	S	T	LA
71	115	95	140	10	3.5	8
80	130	110	160	10	3.5	8
90S	130	110	160	10	3.5	8
90L	130	110	160	10	3.5	8
100	165	130	200	12	3.5	12
112	165	130	200	12	3.5	12
132S	215	180	250	12	4	12
132M	215	180	250	12	4	12

B14B

机座号 Frame	M	N	P	S	T
71	115	95	140	M8	3
80	130	110	160	M8	3.5
90	130	110	160	M8	3.5
100	165	130	200	M10	3.5
112	165	130	200	M10	3.5

D1C系列电机安装与外形尺寸
Installation and overall dimensions of D1C series motor

B3

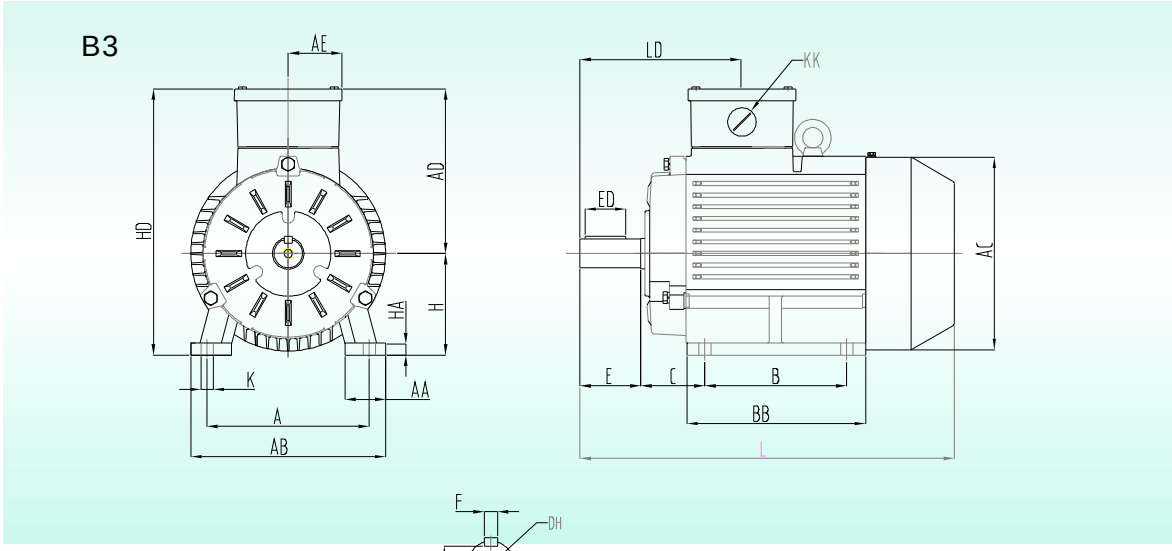

B3

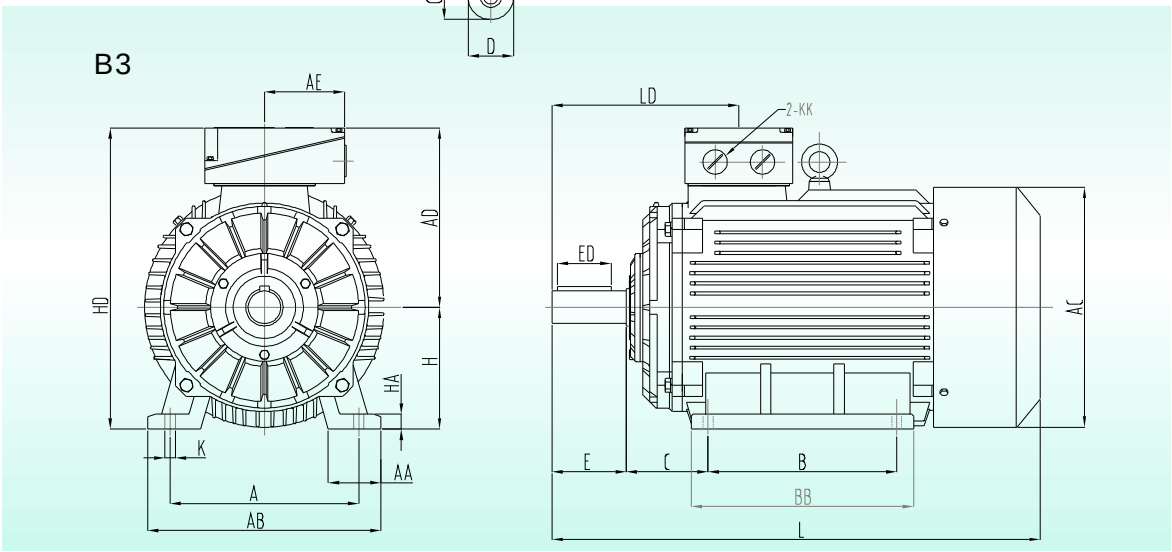

B 5

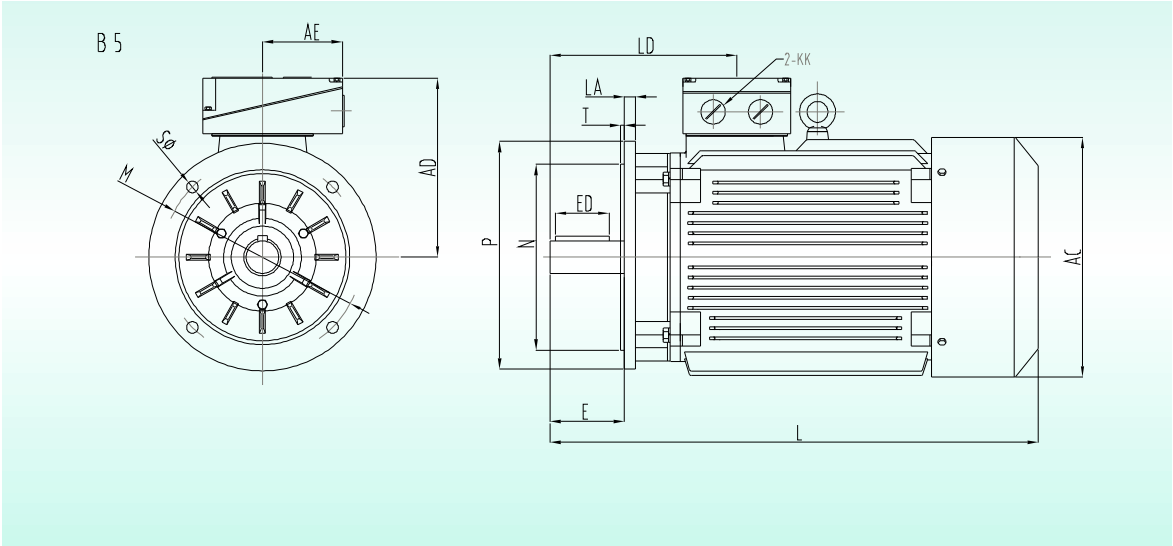

D1C系列电机安装与外形尺寸
Installation and overall dimensions of D1C series motor

机座号 Frame	A	AA	AB	AC	AD	AE	B	BB	C	D	DH	E	ED	F	G	H	HA	HD	K	KK	L	LA	LD	M	N	P	S	T
D1C80	125	35	165	175	140	65	100	130	50	19	M6×16	40	25	6	16	80	10	215	10	M 25	295	10	115	165	130	200	4-12	3.
D1C90S	140	37	180	195	150	65	100	140	56	24	M8×19	50	40	8	20	90	13	235	10	M 25	320	12	130	165	130	200	4-12	3.
D1C90L	140	37	180	195	150	65	125	165	56	24	M8×19	50	40	8	20	90	13	235	10	M 25	345	12	130	165	130	200	4-12	3.
D1C100	160	45	200	215	165	65	140	180	63	28	M10×22	60	45	8	24	100	14	265	12	M 32	375	12	145	215	180	250	4-15	4
D1C112	190	45	230	240	180	65	140	185	70	28	M10×22	60	45	8	24	112	14	290	12	M 32	405	12	150	215	180	250	4-15	4
D1C132S	216	50	275	275	190	65	140	205	89	38	M12×28	80	60	10	33	132	16	325	12	M 32	470	13	180	265	230	300	4-15	4
D1C132M	216	50	275	275	190	65	178	243	89	38	M12×28	80	60	10	33	132	16	325	12	M 32	505	13	180	265	230	300	4-15	4
D1C160M	254	65	314	325	270	110	210	260	108	42	M16×36	110	90	12	37	160	20	425	15	M 40	615	15	256	300	250	350	4-19	5
D1C160L	254	65	314	325	270	110	254	305	108	42	M16×36	110	90	12	37	160	20	425	15	M 40	670	15	256	300	250	350	4-19	5
D1C180M	279	70	349	380	288	110	241	311	121	48	M16×36	110	90	14	42.5	180	22	455	15	M 40	700	18	272	300	250	350	4-19	5
D1C180L	279	70	349	380	288	110	279	348	121	48	M16×36	110	90	14	42.5	180	22	455	15	M 40	740	18	272	300	250	350	4-19	5
D1C200	318	70	388	410	310	160	305	370	133	55	M20×42	110	90	16	49	200	25	510	19	M 50	770	20	306	350	300	400	4-19	5
D1C225S(2P)	356	77	431	470	335	160	286	370	149	55	M20×42	110	90	16	49	225	28	560	19	M 50	820	20	330	400	350	450	8-19	5
D1C225S(4-8P)	356	77	431	470	335	160	286	370	149	60	M20×42	140	110	18	53	225	28	560	19	M 50	820	20	330	400	350	450	8-19	5
D1C225M(2P)	356	77	431	470	335	160	311	393	149	55	M20×42	110	90	16	49	225	28	560	19	M 50	815	20	330	400	350	450	8-19	5
D1C225M(4-8P)	356	77	431	470	335	160	311	393	149	60	M20×42	140	110	18	53	225	28	560	19	M 50	845	20	330	400	350	450	8-19	5
D1C250M(2P)	406	80	480	495	360	170	349	445	168	60	M20×42	140	110	18	53	250	30	615	24	M 50	915	22	345	500	450	550	8-19	5
D1C250M(4-8P)	406	80	480	495	360	170	349	445	168	65	M20×42	140	110	18	58	250	30	615	24	M 50	915	22	345	500	450	550	8-19	5
D1C250M2(4P)	406	80	480	495	360	170	349	445	168	70	M20×42	140	110	20	63	250	30	615	24	M 50	915	22	345	500	450	550	8-19	5
D1C280S(2P)	457	85	542	580	410	170	368	485	190	65	M20×42	140	110	18	58	280	35	690	24	M 63	985	23	380	500	450	550	8-19	5
D1C280S(4-8P)	457	85	542	580	410	170	368	485	190	75	M20×42	140	110	20	68	280	35	690	24	M 63	985	23	380	500	450	550	8-19	5
D1C280M(2P)	457	85	542	580	410	170	419	538	190	65	M20×42	140	110	18	58	280	35	690	24	M 63	1035	23	380	500	450	550	8-19	5
D1C280M(4-8P)	457	85	542	580	410	170	419	538	190	75	M20×42	140	110	20	68	280	35	690	24	M 63	1035	23	380	500	450	550	8-19	5
D1C280M2(4-8P)	457	85	542	580	410	170	419	538	190	80	M20×42	170	140	22	71	280	35	690	24	M 63	1035	23	380	500	450	550	8-19	5
D1C315S(2P)	508	120	628	619	512	160	406	570	216	65	M20×42	140	110	18	58	315	45	830	28	M 63	1180	24	397	600	550	660	8-24	6
D1C315S(4-8P)	508	120	628	619	512	160	406	570	216	80	M20×42	170	140	22	71	315	45	830	28	M 63	1210	24	397	600	550	660	8-24	6
D1C315M(2P)	508	120	628	619	512	160	457	680	216	65	M20×42	140	110	18	58	315	45	830	28	M 63	1290	24	397	600	550	660	8-24	6
D1C315M(4-8P)	508	120	628	619	512	160	457	680	216	80	M20×42	170	140	22	71	315	45	830	28	M 63	1320	24	397	600	550	660	8-24	6
D1C315L(2P)	508	120	628	619	512	160	508	740	216	65	M20×42	140	110	18	58	315	45	830	28	M 63	1290	24	397	600	550	660	8-24	6
D1C315L(4-8P)	508	120	628	619	512	160	508	740	216	80	M20×42	170	140	22	71	315	45	830	28	M 63	1320	24	397	600	550	660	8-24	6
D1C315L1(4P)	508	120	628	619	512	160	508	740	216	90	M24×50	170	140	25	81	315	45	830	28	M 63	1320	24	397	600	550	660	8-24	6
D1C355M(2P)	610	140	740	720	655	190	560	750	254	75	M20×42	140	110	20	68	355	49	1010	28	M 72	1500	25	420	740	680	800	8-24	6
D1C355M(4-10P)	610	140	740	720	655	190	560	750	254	95	2-M16×30	170	160	25	86	355	49	1010	28	M 72	1530	25	450	740	680	800	8-24	6
D1C355L(2P)	610	140	740	720	655	190	630	750	254	75	M20×42	140	110	20	68	355	49	1010	28	M 72	1500	25	420	740	680	800	8-24	6
D1C355L(4-10P)	610	140	740	720	655	190	630	750	254	95	2-M16×30	170	160	25	86	355	49	1010	28	M 72	1530	25	450	740	680	800	8-24	6
D1C400L(2P)	686	120	806	846	678	307	710	1090	280	85	M20×42	170	140	22	76	400	45	1078	36	M 72	1940	26	545	740	680	800	8-24	6
D1C400L(4-12P)	686	120	806	846	678	307	710	1090	280	110	2-M16×30	210	180	28	100	400	45	1078	36	M 72	1980	26	585	740	680	800	8-24	6
D1C450(4P)	750	180	950	920	710	382	900	1020	315	120	2-M16×30	210	180	32	109	450	50	1175	35	M 50	2210							
D1C450(4-12P)	750	180	950	920	710	382	900	1020	315	130	2-M16×30	250	220	32	119	450	50	1175	35	M 50	2250							

轴承型号及润滑油
Bearing type and greasing

轴承标准:
永久型双封闭**ZZ**型轴承。
电机用游隙或**C3**游隙、不具备重新添加润滑油能力的轴承。
具备重新添加润滑油能力的开式轴承。
C3游隙不带润滑脂自动去除功能。

Standard:
"Sealed for life" double shielded ZZ bearings.
Bearing with clearance or C3 clearance、 not regreaseable.

机座号 Frame size	驱动端轴承 Bearing driving end DE	非驱动端轴承 Bearing Non-driving end NDE	添加润滑油的期限（小时数、70℃以下） Regreasing period hours for operating temperature up to 70℃			润滑脂用量（假如安装开式轴承时轴承室所需润滑脂量） Quantity of grease in bearing chamber, e.g.if openning bearings are fitted, the grease volume in the bearing room
			n<3600	n<1800	n<1200	
D1A63	6201ZZ C3	6201ZZ C3	30000	30000	30000	1.5
D1A71	6202ZZ C3	6202ZZ C3	30000	30000	30000	2
D1C(D1A)80	6204ZZ C3	6204ZZ C3	30000	30000	30000	3.54
D1(D1A)C90	6205ZZ C3	6205ZZ C3	28000	30000	30000	4
D1C(D1A)100	6206ZZ C3	6206ZZ C3	25000	30000	30000	6
D1C(D1A)112	6206ZZ C3	6206ZZ C3	20000	20000	30000	7
D1C(D1A)132	6208ZZ C3	6208ZZ C3	15000	20000	30000	10.5
D1C160	6309 C3	6309 C3	6000	12000	18000	13
D1C180	6311 C3	6311 C3	4000	11000	16000	15
D1C200	6312 C3	6312 C3	3500	8500	13000	20
D1C200*	NU312	6312 C3	1800	4250	6500	20
D1C225	6313 C3	6313 C3	3000	6000	9000	22
D1C225*	NU313	6313 C3	1500	3000	4500	22
D1C250	6314 C3	6314 C3	2000	5000	9000	23
D1C250*	NU314 C3	6314 C3	1000	2500	4500	23
D1C280	6316 C3	6316 C3	1200	4000	6000	30
D1C280*	NU316 C3	6316 C3	600	2000	3500	30
D1C315 2P	6317 C4	6317 C3	1200	-	-	30
D1C315 4-10P	NU319 C3	6319 C3	-	2000	3000	45
D1C355 2P	6319 C4	6319 C3	1200	-	-	30
D1C355 4-10P	NU322 C3	6322 C3	-	1400	2200	60
D1C400-2P	6319C3	6319C3	1200			
D1C400-4~12P	NU326C3	6326C3	1200			
D1C450-4-10P	NU332 C3	6332C3	1400	2200		

1,推荐润滑脂 ：机座号 **71-132 SKF LGMT 2**
机座号 **160 - 355 LS3** 或 **Shell Alvania R3**
2,立式安装的电机润滑时间为上述卧式电机润滑时间期限的一半。
3,建议永久性轴承在润滑期限已到的情况下用新轴承来替代。也可以打开轴承外的封盖，进行清洗，使用新润滑脂重新装配，但建议不要这样做（在端盖的内部轴承盖与油封之间润滑油还留在那里，因为所有的电机都是**IP55**，两端都安装有油封）。
4,电机工作温度超过**70**℃时，重新润滑时间应缩短。 * 可供选择的型号

1,Recommended grease:
Frames 71-132 SKF LGMT 2
Frames 160 - 355 LS3 or Shell Alvania R3

2,Vertical motors should be greased at half the time specified above for horizontal motors.

3,It is recommended that "Sealed for life" bearings are replaced with new bearings when they are due for regreasing. It is possible to remove the shield from the out board side of these bearings, clean them out, and repack them with fresh grease, but it is not recommended. (The grease is retainde betwen the inboare bearing shield and the oilseal in the endshield, as all motors are IP55

轴承及油封尺寸

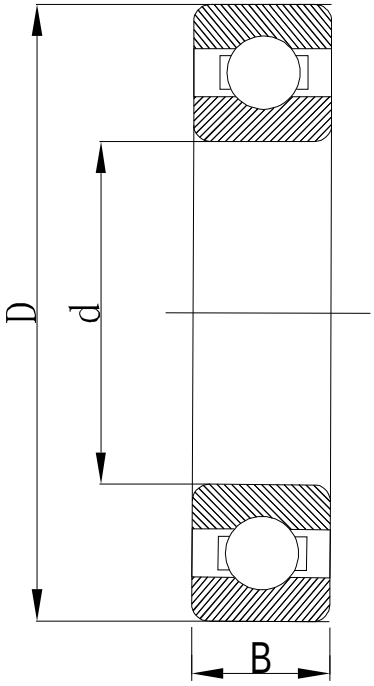

机座号 Frame size	驱动端 DE	非驱动端 NDE	d	D	B
63	6201 ZZ	6201 ZZ	12	32	10
71	6202 ZZ	6202 ZZ	15	35	11
80	6204 ZZ	6204 ZZ	20	47	14
90	6205 ZZ	6205 ZZ	25	52	15
100	6206 ZZ	6206 ZZ	30	62	16
112	6206 ZZ	6206 ZZ	30	72	19
132	6208 ZZ	6208 ZZ	40	90	23
160	6309 C3	6309 C3	45	100	25
180	6311 C3	6311 C3	55	120	29
200	6312 C3	6312 C3	60	130	31
225	6313 C3	6313 C3	65	140	33
250	6314 C3	6314 C3	70	150	35
280	6316 C3	6316 C3	80	170	39
315 2P(卧式 B3)	6317 C4	6317 C3	85	180	41
315 2P(立式 B5)	6317 C4	7217	85	180	41
315 4-10P(卧式 B3)	NU319 C3	6319 C3	95	200	45
315 4-10P(立式 B5)	NU319 C3	7319	95	200	45
355 2P(卧式 B3)	6319 C4	6319 C3	95	200	45
355 2P(立式 B5)	6319 C4	7319	95	200	45
355 4-10P(卧式 B3)	NU322 C3	6322 C3	110	240	50
355 4-10P(立式 B5)	NU322 C3	7322	110	240	50
400 2P	6319 C4	6319 C3	95	200	45
400 4~12P	NU326 C3	6326 C3	130	280	58
450-4~12P	NU332C3	6332C3	160	340	68

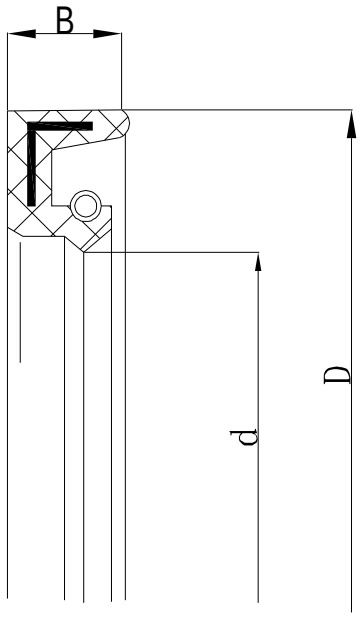

机座号 Frame size	驱动端 DE			非驱动端 NDE		
	d	D	B	d	D	B
63	12	24	5	12	24	5
71	15	30	5	15	30	5
80	20	35	5	20	35	5
90	25	40	5	25	40	5
100	30	52	7	30	52	7
112	30	52	7	30	52	7
132	40	62	8	40	62	5
160	45	65	8	45	65	8
180	55	75	8	55	75	8
200	60	80	8	60	80	8
225	65	90	10	65	90	10
250	70	95	10	70	95	10
280	80	100	10	80	100	10
315 2P	85	110	12	85	110	12
315 4~10P	95	120	12	95	120	12
355 2P	95	120	12	95	120	12
355 4~10P	110	140	12	110	140	12
400 2P	95	120	12	95	120	12
400 4~12P	130	160	12	130	160	12
450-4~12P	160	190	16	160	190	16

D1CEJ系列电磁制动三相异步电动机

产品概述
Product remarks

D1CEJ系列（IP44）电磁制动三相异步电动机（以下简称电机）是在D1C系列（IP55）三相异步电动机的风扇和端盖之间附加一个直流电磁制动器的派生产品。

该系列电机广泛应用于建筑、食品、印刷、橡胶、化工、包装、木工等需要快速、准确停车的各种机械设备中。

该系列电机高效节能、噪音低、安装尺寸和功率等级完全符合IEC标准和DIN42673标准，采用F级绝缘，主机防护等级IP55,电磁制动器防护等级IP44，冷却方式IC411，额定电压和频率为380V，50HZ，S1连续工作制。

该系列电机应在下列条件下使用：

1,海拔不超过1000m,环境空气最高温度随季节变化，但不超过40℃，最低温度为-15℃；若电机在海拔超过1000m或40℃以上的条件下使用，应按照GB755的规定使用。

2,制动器所接入的交流电应为恒频、恒压，不准接入变频电源。

3,D1CEJ系列列电磁制动三相异步电机除总长度外，其它安装尺寸均与D1C系列电机相同。

注：我司可按客户的要求设计特殊电压、频率、功率、极数和特殊结构的电磁制动三相异步电机。

D1CEJ series (IP44) magnetic brake 3-phase electric motor (herein after referred as“motor”) is a derived series of D1C series motor, by adding a D.C magnetic brake device between the cooling fan and the end cover of the motor.

This series motor is widely used in architecture, food machinery, printing, rubber, chemical,packing and wooden machinery which need quick and precise braking.

This series of motor posses the advantage of high efficiency and low power comsuption, low noise, the structure and mounting dimensions are fully conforms to standard of IEC and stipulations in DIN42673. Insulation class F, motor insulation class IP55, brake insulation class IP44, cooling method IC411, rated voltage and frequency is 380V, 50HZ, the motor adopts S1 continuous working mode.

Working conditions:

1, Sea level not over 1000m, humid temperature according season but not over 40℃ , allowed lowest temperature is -1540℃. In case the motor is used in conditions of sea level over 1000m and humid temperature over 40℃, or below -15℃, it's recommend to conforms to standard of Gb755.
2, The magnetic brake must be connect to the A.C power with constant and steady frequency and voltage, and must not connect to invert supply.
3, Ecept the length of the motor, dimensions of D1CEJ motor are fully conforms to D1C series motor.

Note: Dalmo can design special voltage, frequency, output and poles motor, ant other special structure D1CEJ magnetic brake motor according customer's request.

D1CEJ系列电磁制动三相异步电动机技术数据
Technical data of D1CEJ series 3-phase magnetic brake asynchronous electric motor

型号	同步转速 Synchoronous speed (rpm)				制动力矩	空载制动时间	最大工作气隙	励磁电压	制动器励磁功率	电机总长
Type	3000	1500	1000	750	Braking torque	No load braking peroid	Max.working fraction	Exciting voltage	brake Exciting power	Total length
	功率 output (kW)				N.m	S	mm	D.C V	W	mm
D1CEJ 801	0.75	0.55	-	-	8	0.2	1.0	99	50	390
D1CEJ 802	1.1	0.75	0.55	-						
D1CEJ 90S	1.5	1.1	0.75	-	16				60	420
D1CEJ 90L	2.2	1.5	1.1	0.55						445
D1CEJ 100L1	3	2.2	1.5	0.75	32				80	480
D1CEJ 100L2		3		1.1						
D1CEJ 112M	4	4	2.2	1.5	45	0.25		170	110	510
D1CEJ 132S1	5.5	5.5	3	2.2	80		1.2		130	585
D1CEJ 132S2	7.5									
D1CEJ 132M1	-	7.5	4	3						625
D1CEJ 132M2			5.5							
D1CEJ 160M1	11	11	7.5	4	160	0.35			150	720
D1CEJ 160M2	15			5.5						
D1CEJ 160L	18.5	15	11	7.5						765
D1CEJ 180M	22	18.5	-	-	200					825
D1CEJ 180L	-	22	15	11						875
D1CEJ 200L1	30	30	18.5	15	300	0.45	1.5		200	925
D1CEJ 200L2	37		22							
D1CEJ 225S	-	37	-	18.5	450					1000
D1CEJ 225M	45	45	30	22						1030
D1CEJ 250M	55	55	37	30	550	0.50	1.6		300	1120
D1CEJ 280S	75	75	45	37	900					1220
D1CEJ 280M	90	90	55	45						1270

电气连接示意图
Electrical connection illustration

中心高在100及以下电机接线图
Connection of motor central high 100 and below

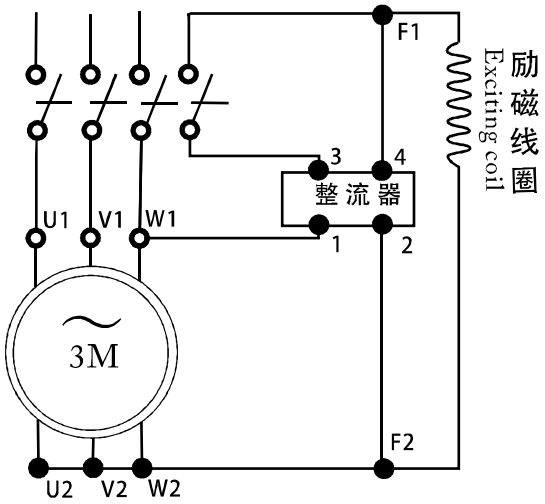

中心高在112及以上电机接线图
Connection of motor central high 112 and above

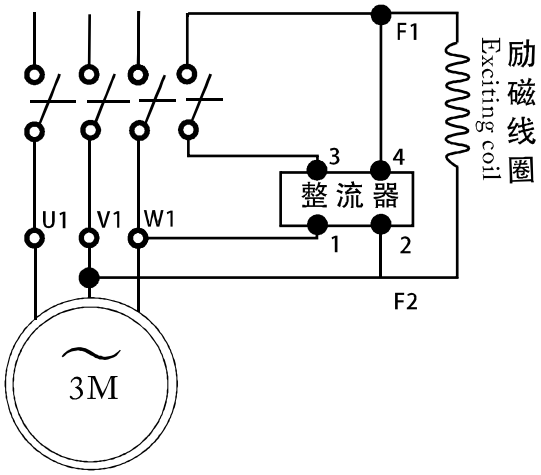

异步电动机三相绕组 3-phase windings of asynchoronous motor	U1	U2
	V1	V2
	W1	W2
直流励磁线圈 D.C exciting coils	F1	F2

安装结构
Structure

机座号 Frame	基本安装结构 Basic arrangement			派生的安装结构 Derived arrangement		
	B3	B5	B35	B6	B7	B8
80～160	√	√	√	√	√	√
180～225	√	√	√	-	-	-
250～280	√	-	√	-	-	-

D1CD系列变极多速三相异步电动机

产品概述
Product remarks

D1CD系列变极多速三相异步电动机

D1CD系列(IP55)变极多速三相异步电动机(以下简称电机)是在我司生产的D1C系列三相异步电动机的基础上所派生产品。该系列电机主要用于需要有级调速的各种机床及各种机械设备上，其电压、频率、安装结构及外形尺寸、绝缘等级、冷却方式均与D1C系列相同。

D1CD series multi-speeds 3-phase electric motor

D1CD series multi-speeds 3-phase electric motor (hereinafter referred as "motor") is manufactured on base of D1C series motor, this series of motor are suitable mainly for driving machinery equipement which need changing speeds during operation. The voltage、frequency、structure and overall dimensions、insulation and cooling mehtod are fully conforms to D1C series motor.

型号说明 Type instruction

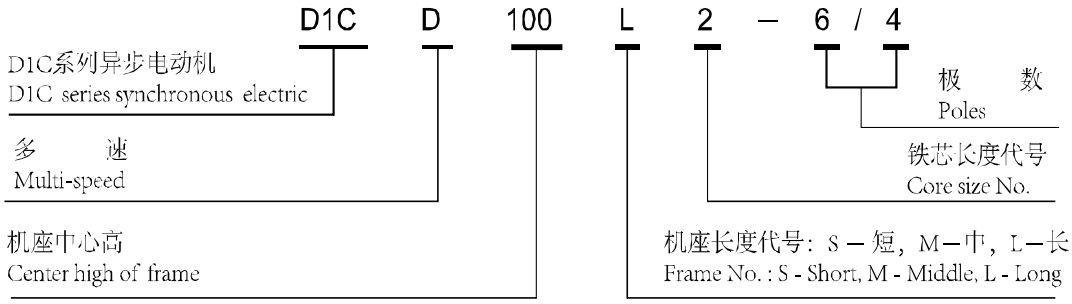

D1CD系列变极多速三相异步电动机技术数据

Technical data of D1CD series multi-speeds 3-phase electric motor

4/2极,同步转速1500/3000转/分　　4/2pole,synchronous speeds1500/3000rpm

型　号 Type	极数 Pole	额定功率 Rated output kW	满载时 Full Load				堵转电流/额定电流 Locked current / Rated current	堵转转矩/额定转矩 Locked torque / Rated torque	最大转矩/额定转矩 Max torque / Rated torque	电机重量 Weight (kg)
			转速 Speed r/min	电流 Current A	效率 Eff %	功率因数 Power factor cosΦ				
D1CD801-4/2	4	0.45	1420	1.4	66	0.74	6.5	1.5	1.8	17
	2	0.55	2860	1.5	65	0.85	7	1.7		
D1CD802-4/2	4	0.55	1420	1.7	68	0.74	6.5	1.6		18
	2	0.75	2860	2	66	0.85	7	1.8		
D1CD90S-4/2	4	0.85	1430	2.3	74	0.77	6.5	1.8		22
	2	1.1	2850	2.8	71	0.85	7	1.9		
D1CD90L-4/2	4	1.3	1430	3.3	76	0.78	6.5	1.8		27
	2	1.8	2850	4.3	73	0.85	7	2		
D1CD100L1-4/2	4	2	1430	4.8	78	0.81	6.5	1.7		34
	2	2.4	2850	5.6	76	0.86	7	1.9		
D1CD100L2-4/2	4	2.4	1450	5.6	79	0.83	6.5	1.6		38
	2	3	2890	6.7	77	0.89	7	1.7		
D1CD112M-4/2	4	3.3	1450	7.4	82	0.83	6.5	1.9		43
	2	4	2860	8.6	79	0.889	7	2		
D1CD132S-4/2	4	4.5	1450	9.8	83	0.84	6.5	1.7		68
	2	5.5	2860	11.9	79	0.89	7	1.8		
D1CD132M-4/2	4	6.5	1450	13.8	84	0.85	6.5	1.7		81
	2	8	2880	17.1	80	0.89	7	1.8		
D1CD160M-4/2	4	9	1460	18.5	87	0.85	6.5	1.6		123
	2	11	2920	22.9	82	0.89	7	1.8		
D1CD160L-4/2	4	11	1460	23.3	87	0.86	6.5	1.7		144
	2	14	2920	28.8	82	0.9	7	1.9		
D1CD180M-4/2	4	15	1470	29.4	89	0.87	6.5	1.8		182
	2	18.5	2940	36.7	85	0.9	7	1.9		
D1CD180L-4/2	4	18.5	1470	35.9	89	0.88	6.5	1.6		190
	2	22	2940	42.7	86	0.91	7	1.8		
D1CD200L-4/2	4	26	1470	49.9	89	0.89	6.5	1.4		270
	2	30	2950	58.3	85	0.92	7	1.6		
D1CD225S-4/2	4	32	1480	60.7	90	0.89	6.5	1.4		290
	2	37	2960	71.1	86	0.92	7	1.6		
D1CD225M-4/2	4	37	1480	69.4	91	0.89	6.5	1.6		325
	2	45	2960	86.4	86	0.92	7	1.6		
D1CD250M-4/2	4	45	1480	84.4	91	0.89	6.5	1.6		427
	2	52	2960	98.7	87	0.92	7	1.6		
D1CD280S-4/2	4	60	1490	111.3	91	0.9	6.5	1.4		565
	2	72	2970	135.1	88	0.92	7	1.5		
D1CD280M-4/2	4	72	1480	133.6	91	0.9	6.5	1.4		667
	2	82	2970	152.2	88	0.93	7	1.5		

D1CD系列变极多速三相异步电动机技术数据
Technical data of D1CD series multi-speeds 3-phase electric motor

6/4、8/4极,同步转速1000/1500、750/1500转/分
6/4、8/4Pole,synchronous speeds1000/1500、750/1500rpm

型 号 Type	极数 Pole	额定功率 Rated output kW	满载时 Full Load				堵转电流/额定电流 Locked current / Rated current	堵转转矩/额定转矩 Locked torque / Rated torque	最大转矩/额定转矩 Max torque / Rated torque	电机重量 Weight (kg)
			转速 Speed r/min	电流 Current A	效率 Eff %	功率因数 Power factor cosΦ				
D1CD90S-6/4	6	0.65	920	2.2	64	0.68	6	1.6	1.8	23
	4	0.85	1420	2.3	70	0.79	6.5	1.4		
D1CD90L-6/4	6	0.85	930	2.8	66	0.79	6	1.6		25
	4	1.1	1400	3	71	0.7	6.5	1.5		
D1CD100L1-6/4	6	1.3	940	3.8	74	0.8	6	1.7		34
	4	1.8	1440	4.4	77	0.7	6.5	1.4		
D1CD100L2-6/4	6	1.5	940	4.3	75	0.8	6	1.6		38
	4	2.2	1440	5.4	77	0.75	6.5	1.4		
D1CD112M-6/4	6	2.2	960	5.7	78	0.82	6	1.8		49
	4	2.8	1440	6.7	77	0.75	6.5	1.5		
D1CD132S-6/4	6	3	970	7.7	79	0.82	6	1.8		65
	4	4	1440	9.5	78	0.76	6.5	1.7		
D1CD132M-6/4	6	4	970	9.8	80	0.85	6	1.6		84
	4	5.5	1440	12.3	82	0.78	6.5	1.4		
D1CD160M-6/4	6	6.5	970	15.1	84	0.85	6	1.5		119
	4	8	1440	17.6	82	0.76	6.5	1.5		
D1CD160L-6/4	6	9	970	20.6	85	0.85	6	1.6		147
	4	11	1440	23.7	83	0.78	6.5	1.7		
D1CD180M-6/4	6	11	980	25.9	85	0.85	6	1.6		192
	4	14	1470	29.8	84	0.78	6.5	1.7		
D1CD180L-6/4	6	13	980	29.4	86	0.86	6	1.7		224
	4	16	1470	33.6	85	0.85	6.5	1.7		
D1CD200L-6/4	6	18.5	980	41.4	87	0.78	6.5	1.6		200
	4	22	1460	44.9	86.5	0.86	7	1.5		
D1CD225S-6/4	6	22	980	44.2	88	0.86	6.5	1.8		290
	4	28	1470	56.5	86.5	0.87	7	1.8		
D1CD225M-6/4	6	26	980	52.2	88	0.86	6.5	1.8		305
	4	32	1470	63.2	85.5	0.9	7	1.8		
D1CD250M-6/4	6	32	980	62.1	90	0.87	6.5	1.5		420
	4	42	1480	81.1	86.5	0.91	7	1.3		
D1CD280S-6/4	6	42	980	81.5	90	0.87	6.5	1.5		550
	4	55	1470	106.7	87	90	7	1.3		
D1CD280M-6/4	6	55	980	106.7	90	0.87	6.5	1.6		610
	4	67	1470	131.5	87	0.89	7	1.3		
D1CD90L-8/4	8	0.45	700	1.9	58	0.63	5.5	1.6	1.8	25
	4	0.75	1420	1.8	72	0.87	6.5	1.4		
D1CD100L-8/4	8	0.85	700	3	67	0.63	5.5	1.6		38
	4	1.5	1410	3.5	74	0.88	6.5	1.4		
D1CD112M-8/4	8	1.5	700	5	72	0.63	5.5	1.7		49
	4	2.4	1410	5.3	78	0.88	6.5	1.7		
D1CD132S-8/4	8	2.2	720	7	75	0.64	5.5	1.5		63
	4	3.3	1440	7.1	80	0.88	6.5	1.7		
D1CD132M-8/4	8	3	730	9	78	0.65	5.5	1.5		80
	4	4.5	1450	9.4	82	0.89	6.5	1.6		
D1CD160M-8/4	8	5	730	13.9	83	0.66	5.5	1.5		124
	4	7.5	1450	15.2	84	0.89	6.5	1.6		
D1CD160L-8/4	8	7	730	19	85	0.66	5.5	1.5		147
	4	11	1450	21.8	86	0.89	6.5	1.6		
D1CD180L-8/4	8	11	730	26.7	87	0.72	6	1.5		259
	4	17	1470	32.3	88	0.91	7	1.5		
D1CD200L1-8/4	8	14	740	33	87	0.74	6	1.8		260
	4	22	1470	41.3	88	0.92	7	1.7		
D1CD200L2-8/4	8	17	740	40.1	87	0.74	6	1.5		275
	4	26	1470	48.8	88	0.92	7	1.7		
D1CD225M-8/4	8	24	740	53.2	89	0.77	6	1.5		300
	4	34	1470	66.7	88	0.88	7	1.5		
D1CD250M-8/4	8	30	740	64.9	90	0.78	6	1.6		420
	4	42	1480	78.8	89	0.91	7	1.7		
D1CD280S-8/4	8	40	740	83.5	91	0.8	6	1.6	1.8	550
	4	55	1480	102	90	0.91	7	1.7		
D1CD280M-8/4	8	47	740	96.9	91	0.81	6	1.6		615
	4	67	1480	122.9	90	0.92	7	1.7		

D1CD系列变极多速三相异步电动机技术数据
Technical data of D1CD series multi-speeds 3-phase electric motor

8/6、12/6/、6/4/2极,同步转速750/1000、500/1000、1000/1500/3000转/分
8/6、12/6/、6/4/2 Pole,synchronous speeds 750/1000、500/1000、1000/1500/3000 rpm

型 号 Type	极数 Pole	额定功率 Rated output kW	满载时 Full Load 转速 Speed r/min	电流 Current A	效率 Eff %	功率因数 Power factor cosΦ	堵转电流 额定电流 Locked current Rated current	堵转转矩 额定转矩 Locked torque Rated torque	最大转矩 额定转矩 Max torque Rated torque	电机重量 Weight (kg)
D1CD90S-8/6	8	0.35	700	1.6	56	0.6	5	1.8	1.8	23
	6	0.45	930	1.4	70	0.72	6	2		
D1CD90L-8/6	8	0.45	700	1.9	59	0.6	5	1.7		25
	6	0.65	930	1.9	71	0.73	6	1.8		
D1CD100L-8/6	8	0.75	710	2.9	65	0.6	5	1.8		38
	6	1.1	950	3.1	75	0.73	6	1.9		
D1CD112M-8/6	8	1.3	710	4.5	72	0.61	5	1.7		51
	6	1.8	950	4.8	78	0.73	6	1.9		
D1CD132S-8/6	8	1.8	730	5.8	76	0.62	5	1.6		63
	6	2.4	970	6.2	80	0.73	6	1.9		
D1CD132M-8/6	8	2.6	730	8.2	78	0.62	5	1.9		84
	6	3.7	970	9.4	82	0.73	6	1.9		
D1CD160M-8/6	8	4.5	730	13.3	83	0.62	5	1.6		119
	6	6	980	14.7	85	0.73	6	1.9		
D1CD160L-8/6	8	6	730	17.5	84	0.62	5	1.6		147
	6	8	980	19.4	86	0.73	6	1.9		
D1CD180M-8/6	8	7.5	730	21.9	84	0.62	5	1.9		195
	6	10	980	24.2	86	0.73	6	1.9		
D1CD180L-8/6	8	9	730	24.8	85	0.65	5	1.8		224
	6	12	980	28.3	86	0.75	6	1.8		
D1CD200L1-8/6	8	12	730	32.5	85	0.66	5	1.8		230
	6	17	980	39	86	0.77	6	2		
D1CD200L2-8/6	8	15	730	40.2	86	0.66	5	1.8		260
	6	20	980	45.4	87	0.77	6	2		
D1CD160M-12/6	12	2.6	480	11.6	74	0.46	4	1.2	1.8	119
	6	5	970	11.9	84	0.76	6	1.4		
D1CD160L-12/6	12	3.7	480	16.1	76	0.46	4	1.2		147
	6	7	970	15.8	85	0.79	6	1.4		
D1CD180L-12/6	12	5.5	490	19.6	79	0.54	4	1.3		224
	6	10	980	20.5	86	0.86	6	1.3		
D1CD200L1-12/6	12	7.5	490	24.5	83	0.56	4	1.5		260
	6	13	970	26.4	87	0.86	6	1.5		
D1CD200L2-12/6	12	9	490	28.9	83	0.57	4	1.5		270
	6	15	970	30.1	87	0.87	6	1.5		
D1CD225M-12/6	12	12	490	35.2	85	0.61	4	1.5		285
	6	20	980	39.7	88	0.87	6	1.5		
D1CD250M-12/6	12	15	490	42.1	86	0.63	4	1.5		405
	6	24	990	47.1	89	0.87	6	1.5		
D1CD280S-12/6	12	20	490	54.8	88	0.63	4	1.5		520
	6	30	990	58.9	89	0.87	6	1.5		
D1CD280M-12/6	12	24	490	63.7	88	0.65	4	1.5		590
	6	37	990	72.6	89	0.87	6	1.5		
D1CD100L-6/4/2	6	0.75	950	2.6	67	0.65	5.5	1.8	1.8	38
	4	1.3	1450	3.7	72	0.75	6	1.6		
	2	1.8	2900	4.5	71	0.85	7	1.6		
D1CD112M-6/4/2	6	1.1	960	3.5	73	0.65	5.5	1.7		43
	4	2	1450	5.1	74	0.81	6	1.4		
	2	2.4	2920	5.8	74	0.85	7	1.6		
D1CD132S-6/4/2	6	1.8	970	5.1	75	0.71	5.5	1.4		68
	4	2.6	1460	6.1	78	0.83	6	1.3		
	2	3	2910	7.4	71	0.87	7	1.7		
D1CD132M1-6/4/2	6	2.2	970	6	77	0.72	5.5	1.3	1.8	78
	4	3.3	1460	7.5	80	0.84	6	1.3		
	2	4	2910	8.8	76	0.91	7	1.7		
D1CD132M2-6/4/2	6	2.6	970	6.9	80	0.72	5.5	1.5		84
	4	4	1460	9	80	0.84	6	1.4		
	2	5	2910	10.8	77	0.91	7	1.7		
D1CD160M-6/4/2	6	3.7	980	9.5	82	0.72	5.5	1.5		124
	4	5	1470	11.2	81	0.84	6	1.3		
	2	6	2930	13.2	76	0.91	7	1.4		
D1CD160L-6/4/2	6	4.5	980	11.4	83	0.72	5.5	1.5		145
	4	7	1470	15.1	83	0.85	6	1.2		
	2	9	2930	18.8	79	0.92	7	1.3		

D1CD系列变极多速三相异步电动机技术数据
Technical data of D1CD series multi-speeds 3-phase electric motor

8/4/2、8/6/4极,同步转速750/1500/3000、750/1000/1500转/分
8/4/2、8/6/4Pole,synchronous speeds750/1500/3000、750/1000/1500rpm

型 号 Type	极数 Pole	额定功率 Rated output kW	满载时 Full Load 转速 Speed r/min	电流 Current A	效率 Eff %	功率因数 Power factor cosΦ	堵转电流/额定电流 Locked current / Rated current	堵转转矩/额定转矩 Locked torque / Rated torque	最大转矩/额定转矩 Max torque / Rated torque	电机重量 Weight (kg)
D1CD112M-8/4/2	8	0.65	700	2.7	59	0.63	4.5	1.4	1.8	45
	4	2	1450	5.1	74	0.81	6	1.3		
	2	2.4	2920	5.8	74	0.85	7	1.2		
D1CD132S-8/4/2	8	1	720	3.6	69	0.61	4.5	1.4		68
	4	2.6	1460	6.1	78	0.83	6	1.2		
	2	3	2910	7.1	74	0.87	7	1.4		
D1CD132M-8/4/2	8	1.3	720	4.6	71	0.61	4.5	1.5		81
	4	3.7	1460	8.4	80	0.84	6	1.3		
	2	4.5	2910	10	75	0.91	7	1.4		
D1CD160M-8/4/2	8	2.2	720	7.6	75	0.59	4.5	1.4		124
	4	5	1440	11.2	81	0.84	6	1.3		
	2	6	2910	13.2	76	0.91	7	1.4		
D1CD160L-8/4/2	8	2.8	720	9.2	77	0.6	4.5	1.3		145
	4	7	1440	15.1	83	0.85	6	1.2		
	2	9	2910	18.8	79	0.92	7	1.3		
D1CD112M-8/6/4	8	0.85	710	3.7	62	0.56	5.5	1.7	1.8	45
	6	1	950	3.1	68	0.73	6.5	1.3		
	4	1.5	1440	5.5	75	0.86	7	1.5		
D1CD132S-8/6/4	8	1.1	730	4.1	68	0.6	5.5	1.4		65
	6	1.5	970	4.2	74	0.73	6.5	1.3		
	4	1.8	1460	4	78	0.87	7	1.3		
D1CD132M1-8/6/4	8	1.5	730	5.2	71	0.62	5.5	1.3		78
	6	2	970	5.4	77	0.74	6.5	1.5		
	4	2.2	1460	4.9	79	0.87	7	1.4		
D1CD132M2-8/6/4	8	1.8	730	6.1	72	0.62	5.5	1.5		84
	6	2.6	970	6.8	78	0.74	6.5	1.7		
	4	3	1460	6.5	80	0.87	7	1.5		
D1CD160M-8/6/4	8	3.3	720	10.2	79	0.62	5.5	1.7		120
	6	4	960	9.9	81	0.76	6.5	1.4		
	4	5.5	1440	11.6	83	0.87	7	1.5		
D1CD160L-8/6/4	8	4.5	720	13.8	80	0.62	5.5	1.6		147
	6	6	960	14.5	83	0.76	6.5	1.6		
	4	7.5	1440	15.6	84	0.87	7	1.5		
D1CD180L-8/6/4	8	7	740	20.2	81	0.65	6.5	1.7		205
	6	9	980	20.6	83	0.8	7	1.7		
	4	12	1470	24.1	84	0.9	7	1.5		
D1CD200L-8/6/4	8	10	740	24.8	85	0.72	6.5	1.6		265
	6	13	980	28.4	86	0.81	7	1.5		
	4	17	1470	33.4	86	0.9	7	1.4		
D1CD225S-8/6/4	8	14	740	34.8	86	0.71	6.5	1.6		290
	6	18.5	990	39.9	86	0.82	7	1.6		
	4	24	1480	46.6	86	0.91	7	1.4		
D1CD225M-8/6/4	8	17	740	42.3	86	0.71	6.5	1.6	1.8	310
	6	22	980	45.2	87	0.85	7	1.6		
	4	28	1480	54.3	87	0.9	7	1.4		
D1CD250M-8/6/4	8	24	740	55.2	87	0.76	6.5	1.5		430
	6	26	990	52.8	87	0.86	7	1.6		
	4	34	1480	63.8	87	0.93	7	1.4		
D1CD280S-8/6/4	8	30	740	68.2	88	0.76	6.5	1.5		560
	6	34	990	67.5	88	0.87	7	1.6		
	4	42	1480	78	88	0.93	7	1.4		
D1CD280M-8/6/4	8	34	740	77.4	89	0.75	6.5	1.4		620
	6	37	990	73.4	89	0.86	7	1.5		
	4	50	1480	91.8	89	0.93	7	1.4		

D1CD系列变极多速三相异步电动机技术数据

Technical data of D1CD series multi-speeds 3-phase electric motor

12/8/6/4极,500/750/1000/1500转/分　　12/8/6/4Pole,500/750/1000/1500rpm

型号 Type	极数 Pole	额定功率 Rated output kW	满载时 Full Load 转速 Speed r/min	电流 Current A	效率 Eff %	功率因数 Power factor cosΦ	堵转电流/额定电流 Locked current/Rated current	堵转转矩/额定转矩 Locked torque/Rated torque	最大转矩/额定转矩 Max torque/Rated torque	电机重量 Weight (kg)
D1CD180L-12/8/6/4	12	3.3	480	17	72	0.56	5	1.6	1.8	216
	8	5	740	20	79	0.67	6.5	1.5		
	6	6.5	970	17	82	0.88	6.5	1.3		
	4	9	1470	23	83	0.88	7	1.3		
D1CD200L1-12/8/6/4	12	4.5	490	17	74	0.56	5	1.3		260
	8	7	740	20	81	0.67	6.5	1.3		
	6	8	980	17	83	0.88	6.5	1.3		
	4	11	1480	23	84	0.88	7	1.3		
D1CD200L2-12/8/6/4	12	5.5	490	20	75	0.56	5	1.3		270
	8	8	740	22	81	0.67	6.5	1.3		
	6	10	980	21	83	0.88	6.5	1.3		
	4	13	1480	27	84	0.88	7	1.3		
D1CD225M-12/8/6/4	12	7	490	21	81	0.63	5	1.6		300
	8	11	740	27	84	0.73	6.5	1.6		
	6	13	980	26	85	0.88	6.5	1.5		
	4	20	1480	39	86	0.9	7	1.3		
D1CD250M-12/8/6/4	12	9	490	26	82	0.63	5	1.6		420
	8	14	740	34	85	0.73	6.5	1.6		
	6	16	990	33	85	0.88	6.5	1.5		
	4	26	1480	49	87	0.92	7	1.3		
D1CD280S-12/8/6/4	12	11	490	32	83	0.63	5	1.6		550
	8	18.5	740	43	87	0.75	6.5	1.6		
	6	20	990	41	85	0.88	6.5	1.5		
	4	34	1490	65	87	0.92	7	1.3		
D1CD280M-12/8/6/4	12	13	490	37	84	0.63	5	1.7		610
	8	22	740	51	87	0.75	6.5	1.7		
	6	24	990	49	85	0.88	6.5	1.6		
	4	40	1490	75	88	0.92	7	1.5		

绕组的电源接线
Winding connection

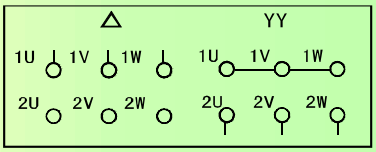

4/2、6/4、8/4、8/6、12/6(△/YY)

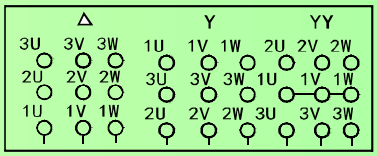

8/6/4极（△/Y/YY）

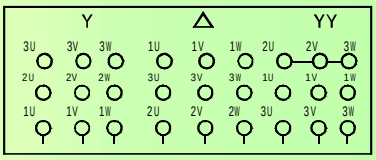

8/4/2, 6/4/2极（Y/△/YY）

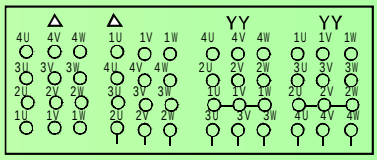

12/8/6/4极（△/△/YY/YY）

绕组的接法及出线端数
Winding connection and Nos. of out letwire

极数 Poles	4/2	6/4	8/4	8/6	12/6	6/4/2	8/4/2	8/6/4	12/8/6/4
接法 Connection method	△/YY					Y/△/YY		△/Y/YY	△/△/YY/YY
出线端数 Outlet	6					9			12

地址：辽宁省庄河市疏港路278号
电话：0411-89812173
传 真：0411-89376329
邮编：116400
网址：www.dalmo.com.cn
邮箱：jlm@dalmo.com.cn

No.278 Shugang Road, Zhuanghe, Dalian, China
TeL: 86 411 89812173
Fax: 86 411 89376329
Email: jlm@dalmo.com.cn
Http://www.dalmo.com.cn
P.O.Box: 116400