Device MCC

Application

Pump

R&D

Medical

Features

High Power

High Efficiency

High Reliability

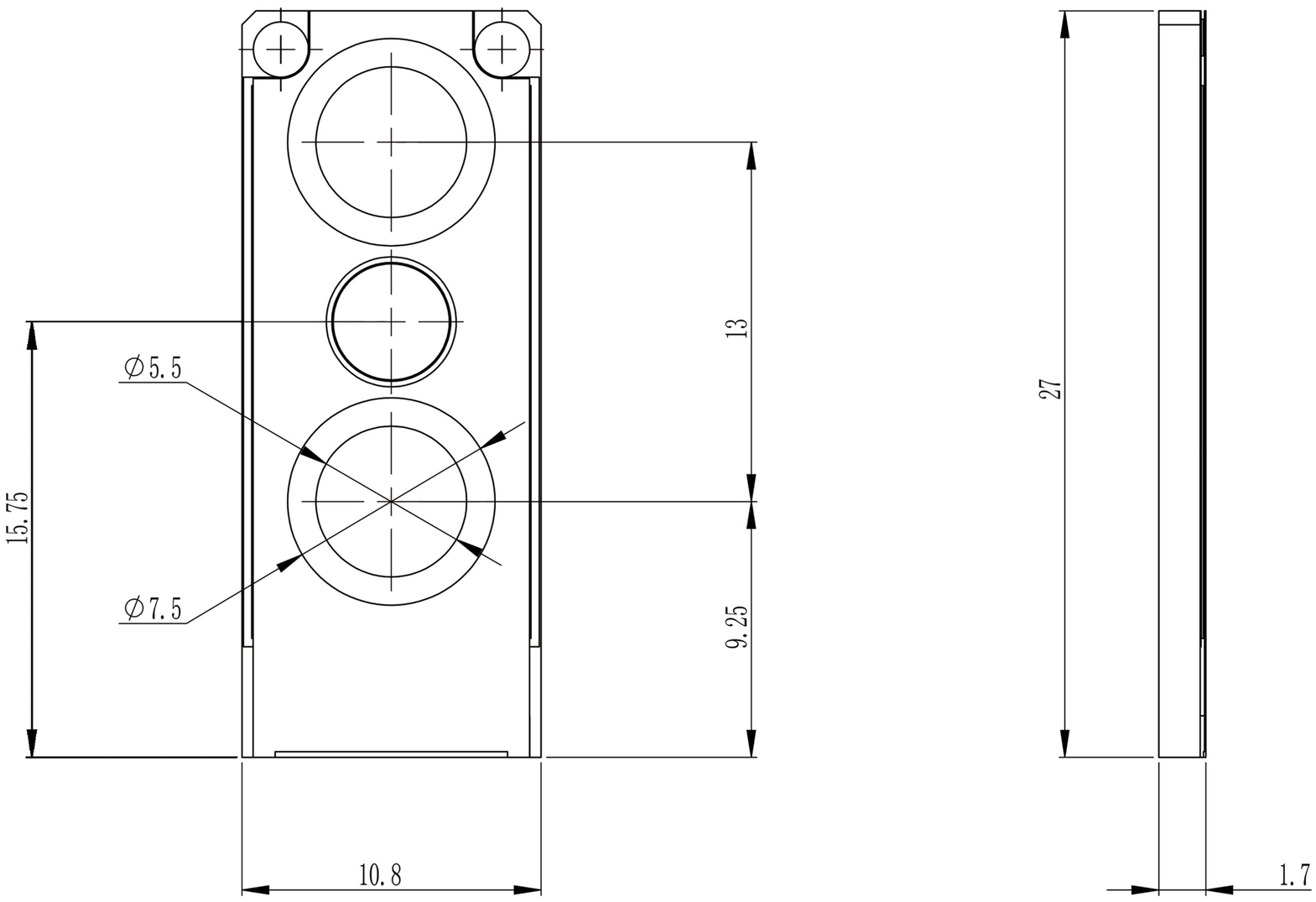

+86-512-69372570 www.everbrightphotonics.com sales@everbrightphotonics.com

MCC		Item Number[1] EB-MCC-###-###-####-##		
Parameter	Unit	500Q 808	200 940	700 940
Optical[2]				
Center Wavelength	nm	808	940	940
Wavelength Tolerance	nm	±3		
Output Power[5]	W	⩾500	⩾200	⩾700
Fast-axis Divergence[4]	Deg	65	55	55
Slow-axis Divergence	Deg	8.5		
Spectral Width (FWHM)	nm	⩽3.5	3	5
Polarization Mode	TM/TE	TE		
Wavelength Temperature Coefficient	nm/℃	0.28	0.3	0.3
Electrical[2]				
Power Conversion Efficiency	%	⩾58	64	63
Slope Efficiency	W/A	1.2	1.1	1.15
Threshold Current	A	28	25	25
Operating Current	A	⩽430	⩽220	650
Operating Voltage	V	2	1.5	1.7
Pulse Width	us	200	200	500
Pulse frequency	Hz	400	400	160.0
Pulse duty cycle	%	8		
Geometric Size				
Number of Emitters	#	34	24	34.0
Emitter Width	μm	232.0	200	232
Emitter Pitch	μm	290	400	290.0
Fill Factor	%	80.0	50	80
Cavity Length	mm	1.5	3	2.0
Bar Thickness	μm	115.0		
Bar Length	mm	10.25		
Thermal				
Operating Temperature[3]	℃	25	20	25
Storage Temperature[3]	℃	-20~80		
Flow Velocity	L/min	0.2	0.25	0.25
Notes				
1. Explanation of Item Number: EB (Everbright In Short) - MCC (MCC Package) –### (Output Power is ###W) -### (Emtter number is ###) - #### (Center Wavelength is ####nm) - ## (Wavelength Tolerance is ±##nm)				
2. Above Data Test at 25℃, Unless otherwise stated.				
3. Please avoid operation and storage in the condensation enviroment. If exceed operating temperature, the device lifetime will be inpacted.				
4. For fast-axis collimation, divergence ⩽0.5°				
5. Lifetime reduced if exceed nominal output power.				
Version: QJ06-1807B-R01				

Suzhou Everbright Photonics Co., Ltd
Bldg 2, No. 189, Kunshanshan Road,
Suzhou Science&Technology Town,
Suzhou New District

www.everbrightphotonics.com
sales@everbrightphotonics.com
+86-512-69372570

Notice：Everbright keep improving its products to provide our customers with outstanding quality and reliability. We may change the specification and product description without notice at any time . For complete details, please contact Everbright sales representative.