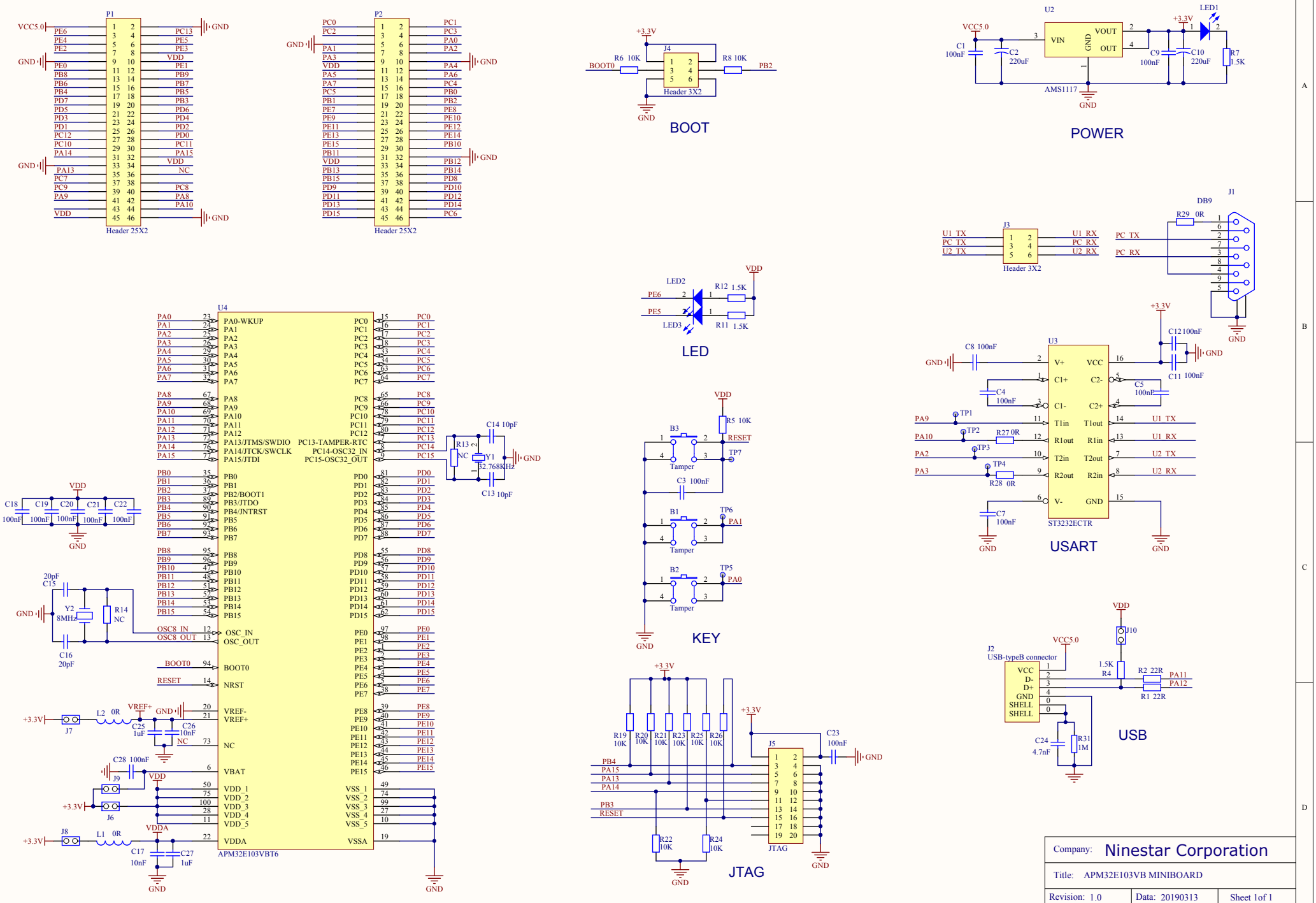
P1
Header 25X2
P2
Header 25X2
BOOT
J4
Header 3X2
R6 10K
R8 10K
BOOT0
PB2
POWER
U2
AMS1117
VIN
VOUT
OUT
GND
VCC5.0
C1 100nF
C2 220uF
C9 100nF
C10 220uF
LED1
R7 1.5K
+3.3V
J3
Header 3X2
U1 TX
PC TX
U2 TX
U1 RX
PC RX
U2 RX
J1
DB9
R29 0R
PC TX
PC RX
LED
LED2
LED3
R12 1.5K
R11 1.5K
VDD
U4
APM32E103VBT6
PA0-WKUP
PA13/JTMS/SWDIO
PA14/JTCK/SWCLK
PA15/JTDI
PC13-TAMPER-RTC
PC14-OSC32_IN
PC15-OSC32_OUT
OSC_IN
OSC_OUT
BOOT0
NRST
VREF-
VREF+
NC
VBAT
VDD_1
VDD_2
VDD_3
VDD_4
VDD_5
VDDA
VSS_1
VSS_2
VSS_3
VSS_4
VSS_5
VSSA
C14 10pF
C13 10pF
R13 NC
Y1 32.768KHz
C18 100nF
C19 100nF
C20 100nF
C21 100nF
C22 100nF
C15 20pF
C16 20pF
Y2 8MHz
R14 NC
L2 0R
C25 1uF
C26 10nF
J7
J9
J6
J8
L1 0R
C17 10nF
C27 1uF
C28 100nF
KEY
B3
B1
B2
Tamper
R5 10K
RESET
TP7
TP6
PA1
TP5
PA0
C3 100nF
JTAG
J5
R19 10K
R20 10K
R21 10K
R23 10K
R25 10K
R26 10K
R22 10K
R24 10K
C23 100nF
USART
U3
ST3232ECTR
V+
C1+
C1-
T1in
R1out
T2in
R2out
V-
VCC
C2-
C2+
T1out
R1in
T2out
R2in
GND
C8 100nF
C4 100nF
C5 100nF
C12 100nF
C11 100nF
C7 100nF
R27 0R
R28 0R
TP1
TP2
TP3
TP4
PA9
PA10
PA2
PA3
U1 TX
U1 RX
U2 TX
U2 RX
USB
J2
USB-typeB connector
VCC
D-
D+
GND
SHELL
J10
R4 1.5K
R2 22R
R1 22R
PA11
PA12
C24 4.7nF
R31 1M
Company: Ninestar Corporation
Title: APM32E103VB MINIBOARD
Revision: 1.0
Date: 20190313
Sheet 1of 1